GENERAL NOTES AND EQUIPMENT SCHEDULE

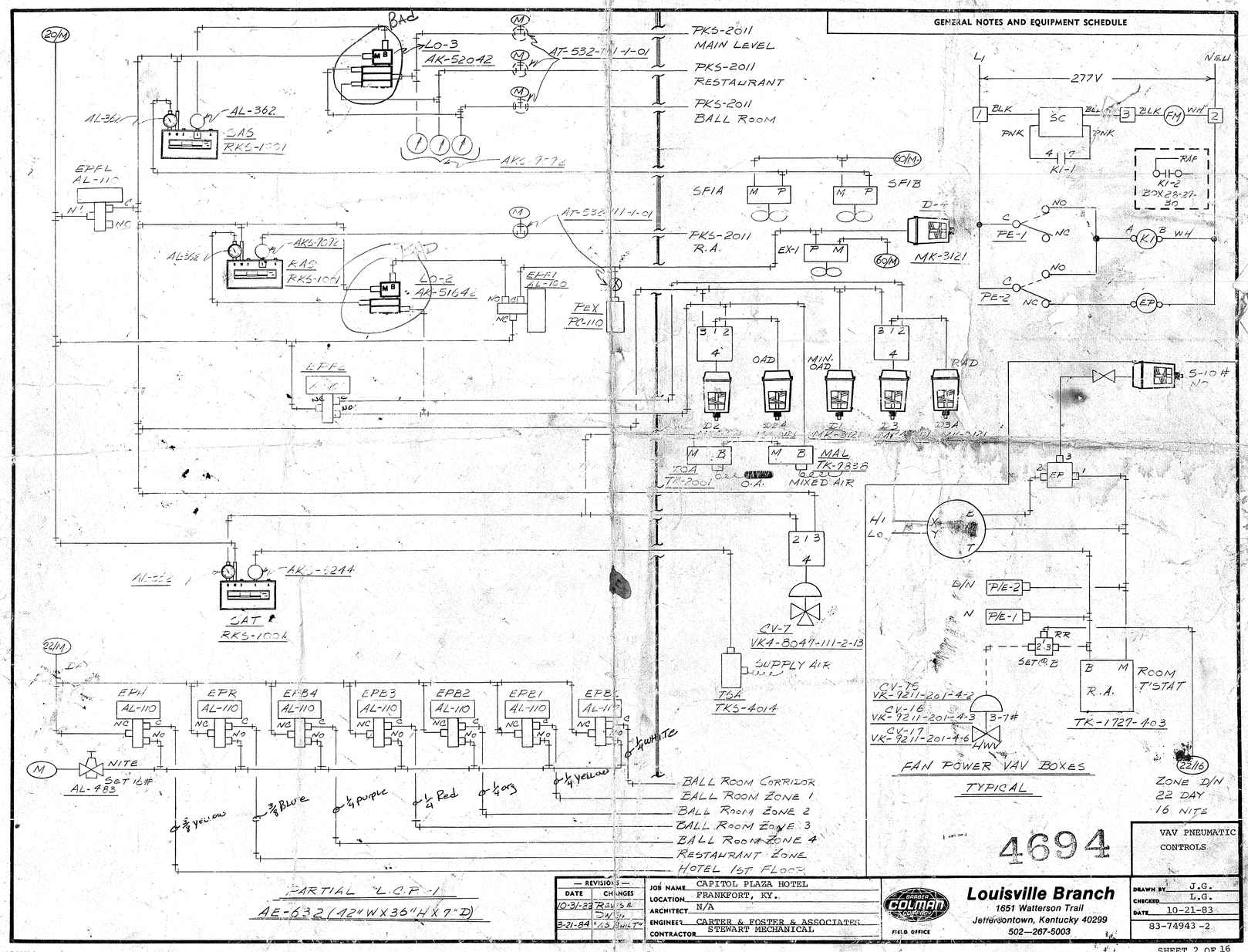

— REVISIONS —	
DATE	CHANGES
10-31-83	REVISE DWG.
3-21-84	"AS BUILT"

JOB NAME CAPITOL PLAZA HOTEL
LOCATION FRANKFORT, KY.
ARCHITECT N/A
ENGINEER CARTER & FOSTER & ASSOCIATES
CONTRACTOR STEWART MECHANICAL

Louisville Branch
1651 Watterson Trail
Jeffersontown, Kentucky 40299
502—267-5003
FIELD OFFICE

DRAWN BY J.G.
CHECKED L.G.
DATE 10-21-83
83-74943-2

P-2969-3

SHEET 2 OF 16

GENERAL NOTES AND EQUIPMENT SCHEDULE

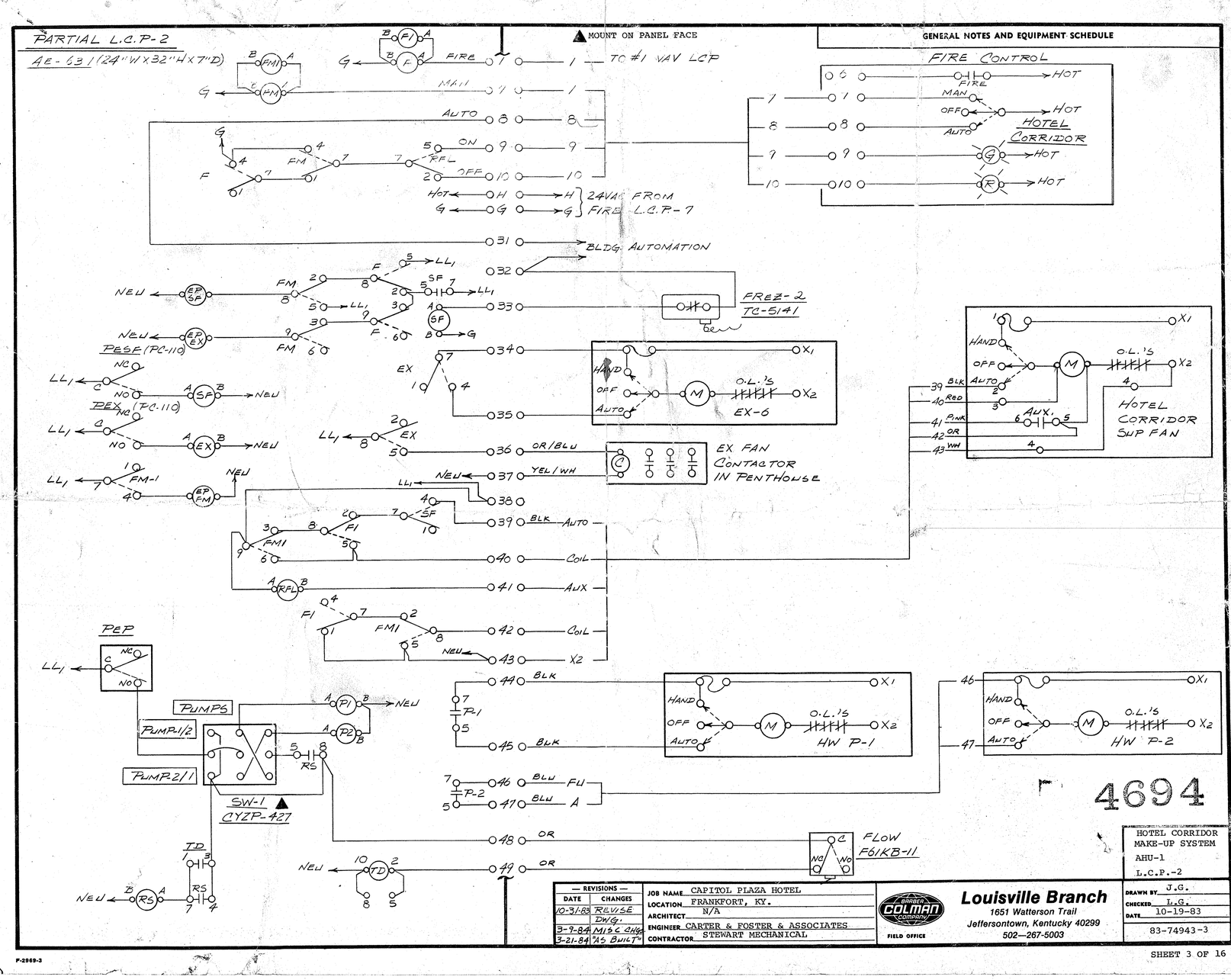

— REVISIONS —	
DATE	CHANGES
10-31-83	REVISE DWG.
3-9-84	MISC CHG.
3-21-84	"AS BUILT"

JOB NAME CAPITOL PLAZA HOTEL
LOCATION FRANKFORT, KY.
ARCHITECT N/A
ENGINEER CARTER & FOSTER & ASSOCIATES
CONTRACTOR STEWART MECHANICAL

Louisville Branch
1651 Watterson Trail
Jeffersontown, Kentucky 40299
502—267-5003
FIELD OFFICE

DRAWN BY J.G.
CHECKED L.G.
DATE 10-19-83
83-74943-3

P-2969-3

SHEET 3 OF 16