GENERAL:

1. COORDINATE structural drawings with other project drawings for all OPENINGS and SLEEVES through the structure, SLAB DEPRESSIONS, FLOOR DRAINS, INSERTS and other RELATED ITEMS.

2. Where OPENINGS occur through floors, roofs or walls, provide framing as per details. Do not interrupt framing members for openings except where so indicated on structural drawings.

3. VERIFY all DIMENSIONS in field before starting the work.

4. Before beginning construction, NOTIFY ENGINEER of any discrepancies or conflicts found in drawings and/or field dimensions.

5. EXISTING structures are shown on drawings for clarity only. VERIFY all dimensions, elevations and type of construction of those structures and NOTIFY ENGINEER before beginning new construction of any interferences and/or discrepancies that might exist.

6. See Architectural drawings for LOOSE LINTELS not shown on structural drawings. Where lintels are not otherwise shown or specified, lintels in tile walls shall consist of concrete filled trough tile, not less than 8" high, reinforced with 2 - #5 bars continuous (1 in top and 1 bottom) for each nominal 4 inch thickness of tile, and lintels in brick walls or brick facing shall consist of one angle 4" x 3-1/2" x 5/16" (LLV) for each nominal 4 inch thickness of brick. Loose lintels shall have a bearing on masonry equal to 1 inch per foot of span but not less than 6 inches.

7. See Architectural drawings for all waterproofing and damp proofing details.

8. Install cast-in-place INSERTS and ANCHORS in concrete for suspending mechanical and architectural items where feasible. If additional fasteners are needed in conventionally reinforced concrete, use drilled-in type anchors located to avoid conflict with reinforcement.

9. Construct project to comply with KENTUCKY BUILDING CODE. 1980 EDITION.

10. Verify all elevations and dimensions with architectural drawings.

11. Shore cast-in-place construction to a minimum of 3 completed levels or to ground where less than 3 floors exist.

12. DESIGN LIVE LOADS:

Roof	20 psf + (15 snow allowance)
Typical Hotel Floor	40 psf + 20 psf partition allowance
Elevator Lobby, Stairs and Terrace	100 psf
Corridors serving Hotel	80 psf
Other Areas Noted	See Drawings

13. DEAD LOAD.....Actual

14. DESIGN WIND LOADS:

Height Zone	Horizontal Pressure as a Whole
0' - 29'	14 psf
30' - 49'	20 psf
50' - 99'	22 psf
100' - 200'	28 psf

FOUNDATIONS AND EARTHWORK

1. FOUNDATION DESIGN criteria for this project is described in "Report of Additional Subsurface Exploration, Capitol Plaza Hotel Frankfort, Kentucky by Law Engineering dated October 20, 1982. Also the Addendum to above mentioned soil report dated November 17, 1982.

2. All FOUNDATIONS and EARTHWORK shall be subject to observation by SOILS ENGINEER, designated by Owner, whose APPROVAL is required prior to placement of concrete in footings and over subgrades. Coordinate schedules to facilitate observation.

3. Determine in the field the horizontal and vertical location of any EXISTING UTILITY LINES and/or APPURTENANCES and advise Architect and Engineer of any conflicts with new structures prior to their construction. Do not destroy any existing underground structure unless written authorization is obtained prior to construction.

4. Construct MAT to bear on 3" of mud slab f'c = 2000 psi over brown wilty clay. DESIGN BEARING VALUE under mat is assumed to be 3500 pounds per square foot (Net). Site preparation for a mat foundation should include stripping of top soil and vegetation. After the site has been cut to the proposed bearing elevation, the exposed soil should be proofrolled as recommended in the project soils report.

5. Construct interior SLABS-ON-FILL on a VAPOR BARRIER over subgrade. Strip, excavate and/or fill with approved materials as required to prepare subgrade as follows:

   a. Install a COMPACTED SLECT FILL over mat as required for ground floor slab.

6. Use only materials, approved by the SOILS ENGINEER, in COMPACTED SELECT FILL.

7. COMPACT all FILL used under slabs-on-fill to 92% of modified Proctor density at optimum moisture content. (ASTM D-1557)

8. Provide for DRAINAGE of BACKFILL behind walls that retain earth. Design of those walls is based on an equivalent fluid pressure of 80 pcf. Verify requirements with SOILS ENGINEER.

9. Fill or backfill placed under mat foundation shall be compacted to at least 95% of modified proctor maximum dry density.

REINFORCED CONCRETE

1. Construct all REINFORCED CONCRETE to comply with recommendations of ACI 318-77 and ACI 301-72 (Rev. 1981) unless otherwise noted or specified.

2. DETAIL, FABRICATE, and PLACE all reinforcing steel to comply with recommendations of ACI "Manual of Standard Practice for Etailing Reinforced Concrete Structures (ACI-315-74)."

3. Show location of all required and additional proposed CONSTRUCTION JOINTS and additional REINFORCING STEEL required therein on reinforcing steel SHOP DRAWINGS.

4. CONCRETE shall conform to the following requirements:

Location	Type	Min. 28-Day Compressive Strength (psi)	Min. Cement Content
Mat Foundation	Normal	3000	5
Slab, beams, columns, walls	Normal	4000	6
Concrete over metal deck at Heli Stop	Normal	3000	5
Slab-on-Grade	Normal	3000	5
Precast Panel	Normal	5000	7

5. Include AIR ENTRAINING ADMIXTURE and WATER REDUCING ADMIXTURE in all concrete mixes except in footings and foundation piers.

6. REINFORCING BARS shall have minimum YIELD STRENGTH indicated below and shall comply with ASTM A 615 standard and shall be grade indicated below:

Item	Grade	Yield Strength
All Reinforcing Bar	60	60,000 psi
Stirrups and Ties	40	40,000 psi

7. WWF shall conform with ASTM A 185 standard.

8. Unless otherwise noted, all INTERIOR SLABS and STAIRS-ON-FILL shall be 5 inches thick reinforced with #3 @ 15" continuous both ways or equivalent. Support bars to a position 2" clear below top of slab.

9. Reinforcing bars noted CONT. shall lap 30 bar diameters at splices and shall have matching corner bars. TOP BARS noted CONT. in beams may be spliced at midspans only. BOT. BARS noted CONT. in beams may be spliced at supports only.

10. Provide CONCRETE COVERAGE for reinforcing steel as follows unless otherwise shown:

Mat and Footings.....3" clear.
Walls: At faces exposed to weather or earth.....2" clear.
Typical, except as otherwise noted.....1" clear.
Columns and Pedestals:
At faces exposed to weather or earth.....2" clear to ties.
Typical, except as otherwise noted.....1-1/2" clear to ties.
Beams: At faces exposed to weather or earth.....2" clear to ties.
Typical, except as otherwise noted.....1-1/2" clear to ties.
Structural Slabs;
At surfaces exposed to weather or earth.....1-1/2" clear.
Typical, except as otherwise noted.....1" clear.
Slabs-on-Grade: At top surface.....2" clear.
Conduits.....Above bottom bars and below top bars.

11. Provide CORNER BARS as per typical detail at corners and intersections of all grade beams and walls.

12. Set ANCHOR BOLTS to have at least 3" concrete cover and to allow reinforcement to pass outside of bolts.

13. Provide and install reinforcing bar ACCESSORIES in accord with recommendations of ACI 315-74.

14. Reinforce all CONCRETE WALLS (except where otherwise detailed) with #4 @ 12" each way each face.

15. Provide #4 @ 18" DOWELS from all adjacent concrete grade beams and walls to INTERIOR SLABS-ON-FILL.

16. DOWEL CONCRETE WALLS into abutting floor and roof slabs with bars of same size and spacing as wall bars and embed the dowels at least 24 bar diameters, unless otherwise shown.

17. When concrete WALLS span vertically to RETAIN EARTH below grade, CONSTRUCT FLOORS at top and bottom of such walls before BACKFILL is placed.

18. Install adequate temporary SHORING and BRACING during construction for all concrete and precast concrete members to support all applied loads.

19. Provide 2-#5 bars around all OPENINGS in structural slabs and walls in which either side is greater than 12" and extend such bars at least 24" beyond corners. U.N.O.

20. Provide TEMPERATURE STEEL consisting of #4 @ 15" in all supported SOLID SLABS except where otherwise noted or scheduled. Extend such bars across beams parallel to slab and support at 1-1/2" below top surface.

21. CONSTRUCTION JOINTS in structural concrete floors and roofs shall be located only within middle third of beam and slab spans and shall have prior approval of Engineer. Concrete shall be BONDED across joints.

22. At CONSTRUCTION JOINTS in structural CONCRETE MEMBERS, provide reinforcing bar DOWELS across joint in compression face in addition to other reinforcing. Aggregate cross section of dowels shall be equal to 0.5% of concrete cross section area and shall extend 30 bar diameters each side of joint.

23. Provide CONSTRUCTION JOINTS in Slabs-on-Fill to divide slabs into near-square shapes not to exceed 2,500 square feet in area and place concrete slab in CHECKER BOARD fashion.

24. Saw-cut CONTROL JOINTS in Slab-on-Fill to divide slab into near-square shapes not exceeding 500 square feet in area. Construction joints may be used in lieu of control joints.

25. Secure APPROVAL of Engineer for location of all CONSTRUCTION JOINTS not shown on drawings for spacing, accessibility, and should any donflicts occur, notify Engineer prior to fabrication and/or construction.

26. Provide VAPOR BARRIER under all interior Slabs-on-Fill or Slabs-on-Grade.

27. Pour schedule for Mat Foundation shall be submitted for Engineer's review.

28. All ASTM A 615 grade 60 shall be mill marked so that type, grade and yield strength notations are visibly identifiable.

TILT-UP PRECAST PANELS

1. REINFORCING STEEL shown in tilt-wall panels are for in-place panels only. The Contractor shall be totally responsible for all erection loads imposed and shall provide whatever additional reinforcing is required accordingly.

2. VERIFY height, length and location of all panels with Architectural Plans.

3. VERIFY all OPENINGS with Architectural Plans for size and location.

4. Contractor to coordinate the location of all EMBEDDED ITEMS prior to casting of tilt wall.

5. All panels shall be MOIST-CURED for a period of 7 days.

6. Tilt-wall panel may be LIFTED after the CONCRETE STRENGTH in the panel reaches a minimum 75 percent of required 28 day strength but no panel shall be lifted before the age of 7 days.

STRUCTURAL STEEL

1. DETAIL, FABRICATE and ERECT all STRUCTURAL STEEL in accordance with latest AISC "Specification for Design, Fabrication and Erection of Structural Steel for Buildings."

2. Except where otherwise noted, all STRUCTURAL STEEL shall have a minimum yield strength of 36 ksi and shall conform to ASTM A36.

3. H T BOLTS shall conform to ASTM A325 or ASTM A490 and shall be designed to indicate when it has been tightened to the required bolt tension. (Bolts shall be equal to Bethlehem Load Indicator Bolt [LIB], by Bethlehem Steel Corp.). Only one type permitted in a connection.

4. Temporary ERECTION BOLTS shall conform to ASTM A307.

5. All ANCHOR BOLTS shall conform to ASTM A307 unless otherwise noted.

6. Perform WELDING with E70 XX ELECTRODE.

7. SIMPLE BEAM CONNECTIONS shall be capable of supporting reaction, R, computed as follows except where larger R is noted on drawings:

   Beams non-composite with slab: $R = 0.60 \frac{Wc}{L}$

   L = Beam span in ft.

   Obtain Wc for indicated beam size and steel grade from "Table of Uniform Load Constants" in AISC "Manual of Steel Construction," Part 2.

8. Where BEAMS are shown on drawings to have axial forces, TENSION or COMPRESSION, make end connections to transmit the forces through the connection.

9. WELDING shall be in accord with "Code for Welding in Building Construction" by American Welding Society (AWS D1.0-81). Welding shall be performed only by prequalified operators.

10. H T BOLT CONNECTIONS shall be FRICTION TYPE unless otherwise specifically noted or permitted. Make such connections to comply with "Specifications for Structural Joints Using ASTM A325 or A490 Bolts," approved by Research Council on Structural Connections and endorsed by AISC. Install Bethlehem LIB bolts, or equal, in accord with manufacturer's standard specification and printed instructions.

11. STRUCTURAL STEEL SHOP DRAWINGS and ERECTION DRAWINGS shall be original and shall be submitted for approval prior to fabrication. Reproducible prints made from contract drawings are not permitted.

12. FIELD PAINTING and TOUCH-UP shall be performed on all field welded joints of steel that has had a shop coat of paint.

13. PACK space solid above supporting concrete below column BASE and beam BEARING PLATES with non-staining non-shrink GROUT.

14. Maintain structural STABILITY during erection by installation of TEMPORARY VERTICAL and HORIZONTAL BRACING in all stories above completed floor slabs and permanent vertical bracing. Limit temporary bracing to two stories unless otherwise approved by the Engineer.

STEEL JOISTS

1. DETAIL, FABRICATE and ERECT all STEEL JOISTS, JOIST GIRDERS and JOIST BRIDGING in accord with latest Standard Specifications of Steel Joist Institute.

2. MINIMUM BEARING for H-Series joists shall be 2-1/2" long on steel and 4" long on masonry or concrete.

3. JOIST BRIDGING shall be erected prior to erection on decking on joist system.

4. Any CONCENTRATED LOAD that exceeds 50 lbs. and is suspended from joists shall be suspended from joist PANEL POINTS along top chord. Provide additional FRAMING as required to transfer loads to those points.

PRECAST NOTES:

1. Exterior precast concrete spandrel shall be designed by precast supplier to carry all imposed construction, working load (including wind).

2. Precast panels shall meet all standards and specifications as dictated by the applicable building code.

3. All panel calculations for design and connection to structure shall be submitted to the architect and engineer for review.

4. Provide a method of guying and bracing precast element during erection.

5. All calculations shall be signed and sealed by a registered professional engineer in the State of Kentucky.

6. Precast supplier may provide alternate precast connection details for engineer's review.

7. Submit shop drawings for all precast panels prior to fabrication.

8. All exposed connections shall be painted with rust preventive paint.

EXISTING STRUCTURES AND UTILITIES

1. At the east side of the proposed building, exists a concrete structure named "Fountain Place."

2. Before commencing any work, the Contractor shall survey the site and determine the exact location of the existing buildings and their foundations in relationship to the location of the proposed building and shall notify the engineer of any conflict between existing buildings and the proposed building in order for the engineer to make required modification to accommodate the existing construction.

3. The contractor shall verify the location of all utilities. Existing utilities shall not be disturbed. The contractor shall provide a method of construction that will avoid damage to these utilities. The contractor shall be responsible for any damage to the utilities.

4. The contractor shall be responsible for any damage to the existing foundations and shall take appropriate construction method which will not undermine the existing foundation.

STEEL ROOF DECKING

1. STEEL ROOF DECK used to support rigid insulation shall be intermediate Rib configuration, 1-1/2 in. rib height, minimum 22 gage steel, designed in accordance with latest edition of "Basic Design Specification" as adopted by Steel Deck Institute, and shall have following properties:

   Min. S = 0.126 in. ^{3}/ft.

   Min. I = 0.125 in. ^{4}/ft.

2. Layout decking to be at least 3 span continuous where possible and ERECT and WELD to supporting steel in accord with deck manufacturer's recommendations as required to provide a DIAPHRAGM SHEAR resistance.

   Maximum spacing of puddle welds to supports shall be as follows:

   Ends and end laps - 7 per sheet and not to exceed 6" o.c.

   Intermediate supports - 7 per sheet and not to exceed 6" o.c.

   Marginal supports parallel to deck span - 12" o.c. maximum.

   Connect adjacent deck units together with 1-1/2" long welds at 12" o.c. maximum spacing.

3. All openings which CUT a RIB shall be FRAMED or deck shall be STIFFENED.

4. For floor deck see plans.

5. All roof deck weld requirements will apply to floor deck.

SUPPLEMENTAL (LOW RISE) GENERAL NOTES

FOUNDATION:

1. All spread footings design bearing value is assumed to be 3500 pounds per square foot.

2. Final bearing elevations of footings shall be verified by the soils engineer in the field.

3. Concrete for footings and slab on fill shall be f'c = 3,000 psi, normal weight.

4. Compact all fill used under slabs on fill to 92 percent of Modified Proctor density at optimum moisture content (ASTM D-1557).

5. Fill or backfill placed under footings shall be compacted to at least 95 percent of Modified Proctor maximum dry density.

ROOF:

1. Design Loads:

Roof live load	20 psf + 15 psf snow allowance
Roofing	14 psf
Insulation	4 psf
Metal deck	2 psf
Ceiling	7 psf
For finishing allowance	12 psf

REVISED 3-23-83

ISSUED FOR CONSTRUCTION 05.10.1983

Intertech ENGINEERS INC
13150 COIT ROAD SUITE 125 DALLAS TEXAS 75240
TELEPHONE 214) 699-8000 TELEX 73-0455

CAPITOL PLAZA HOTEL
FRANKFORT / KENTUCKY

STATE OF KENTUCKY ★ BEN WILEY YOUNG 10492 REGISTERED PROFESSIONAL ENGINEER ★

JOHNSON/ROMANOWITZ/ARCHITECTS/LEXINGTON/KENTUCKY
301 EAST VINE STREET, SUITE A
TELEPHONE (606) 252-6781

DRAWN	PROJECT 82149
CHECKED	DATE 12-30-82

STRUCTURAL

GENERAL NOTES

DRAWING S-101

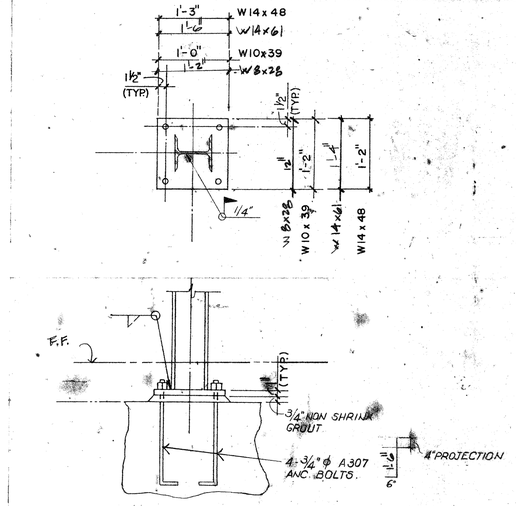

TYP. BASE PLATE DETAIL

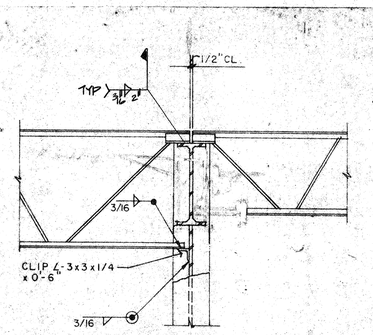

BRACE TO COL. WEB
CONNECTION TO COLUMN FLANGE SIMILAR

BRACE TO BEAM STIFF. PL

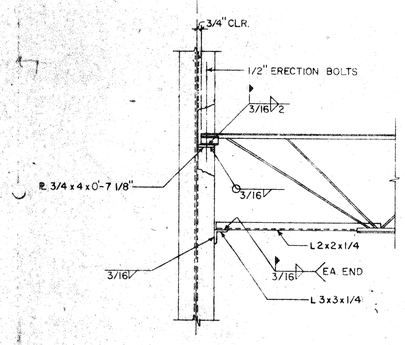

TYP. JOIST-TO-COLUMN DET.

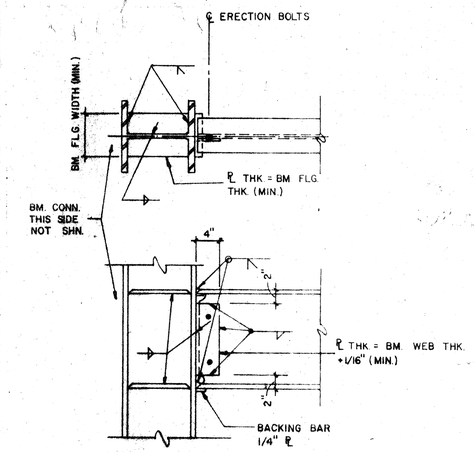

BEAM TO COLUMN FLANGE
(NOTED "M.C." ON PLAN)

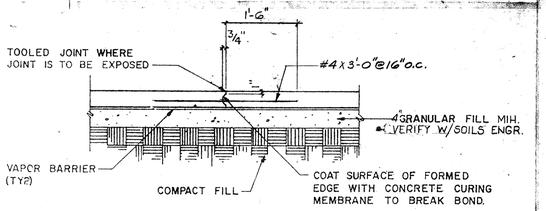

CONSTRUCTION JOINT
(NOTED C.J. ON PLAN)

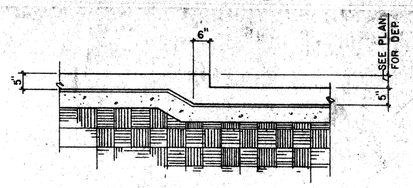

DEPRESSION

MAX. DIMENSION	REINFORCEMENT
0" – 6"	1-#5 EACH SIDE
> 6"	COORDINATE W/ENGINEER UNLESS OTHERWISE SHOWN ON STRUCT. DWGS.

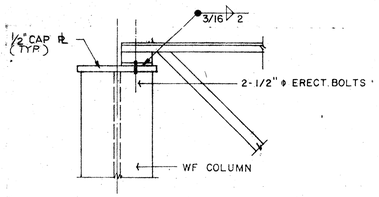

TOP OF COLUMN CONNX.

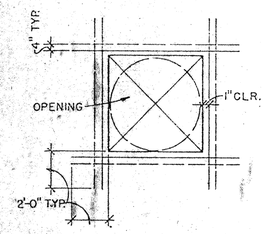

TYPICAL OPENING DETAIL

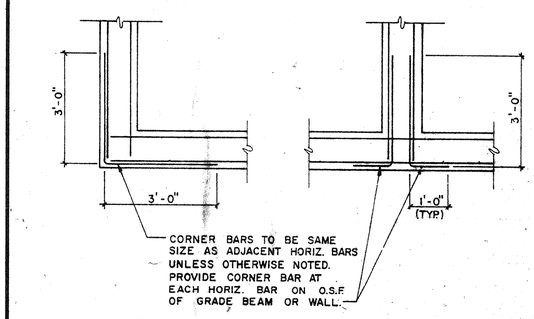

CORNER INTERSECTION

NOTES
1. PROVIDE CORNER BAR AT ALL CORNERS AND INTERSECTIONS OF GRADE BEAMS OR WALLS.
2. TERMINATE TOP CONT. BARS WITH STANDARD A.C.I. HOOK AT ALL CORNERS AND INTERSECTIONS.

TYP. CORNER BAR DETAILS

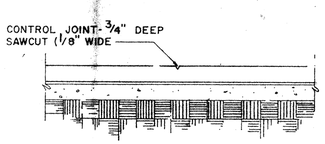

CONTROL JOINT

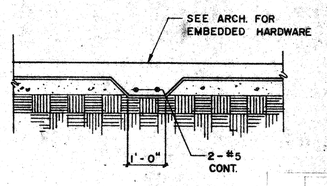

THICKENED SLAB @ FOOT OF STAIRS

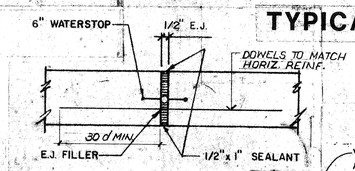

EXPANSION JOINT

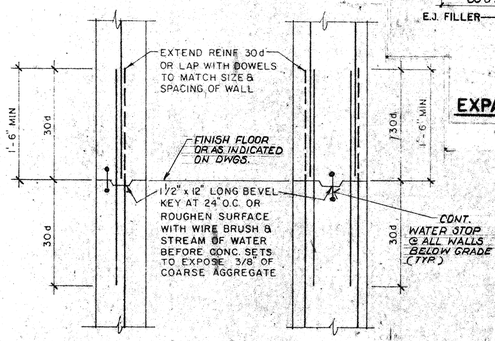

SINGLE LAYER DOUBLE LAYER
VERTICAL & HORIZONTAL

TYP. WALL CONST. JOINT DETAIL

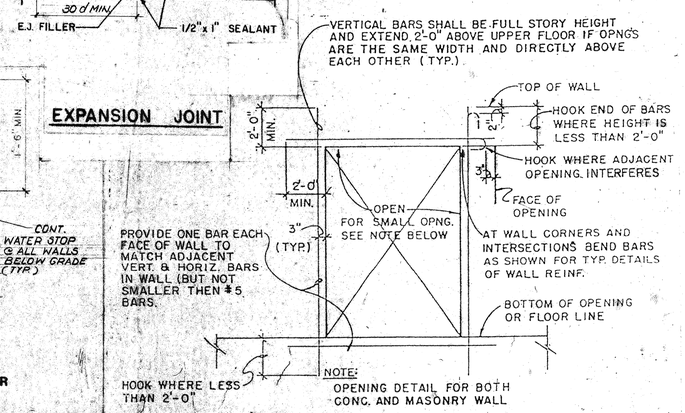

NOTE:
OPENING DETAIL FOR BOTH CONC. AND MASONRY WALL

TYP. WALL OPENING DETAIL

NOTE:
FOR MISC. WALL OPENING REINF. DIMENSION FROM 6" TO 2'-0" USE 2-#4 EACH SIDE FOR CONC.

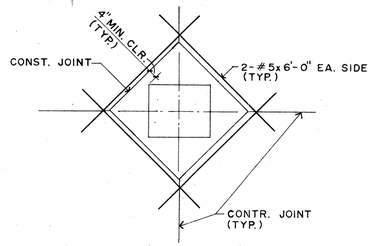

COL. BASE PLAN AT GROUND LEVEL

REVISED 3-23-83

ISSUED FOR CONSTRUCTION 05.10.1983

Intertech ENGINEERS INC
13150 COIT ROAD SUITE 125 DALLAS TEXAS 75240
TELEPHONE 214) 699-8000 TELEX 73-0455

CAPITOL PLAZA HOTEL
FRANKFORT / KENTUCKY

JOHNSON/ROMANOWITZ/ARCHITECTS/LEXINGTON/KENTUCKY

DRAWN	PROJECT 82149
CHECKED	DATE 12-30-82

STRUCTURAL
TYPICAL DETAILS

DRAWING S-102

MAT FOOTING AND FOUNDATION PLAN

SCALE: 1/8" = 1'-0"

NORTH

Reinforcing placing sequence for MAT shall be as follows:

a. Place N-S bottom bars first.
b. Place E-W bottom bars second.
c. Place E-W top bars third.
d. Place N-S top bars last.

Note: Top and bottom concrete cover shall be 3".

NOTES:

1. Verify all dimensions and details with architect's drawings.
2. See Sheet S-101 for General Notes.
3. See Sheet S-102 for Typical Details.
4. See Sheet S-501 for column reinforcing.
5. See Sheet S-502 for shear wall reinforcing.
6. See Foundation Notes on Sheet S-101 for grade compaction requirements.

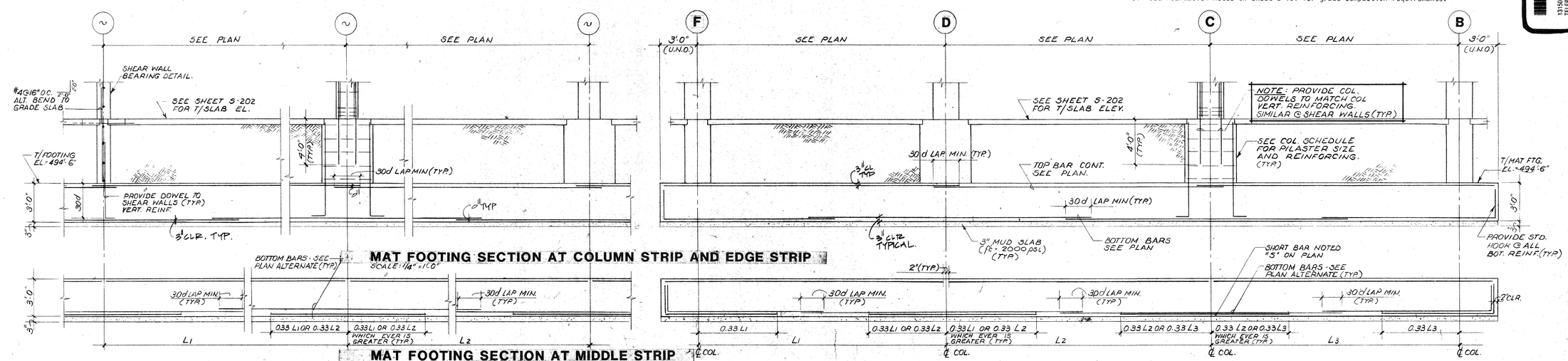

MAT FOOTING SECTION AT COLUMN STRIP AND EDGE STRIP

SCALE: 1/4" = 1'-0"

MAT FOOTING SECTION AT MIDDLE STRIP

CAPITOL PLAZA HOTEL
FRANKFORT / KENTUCKY

Intertech ENGINEERS INC
13150 DOIT ROAD SUITE 125 DALLAS, TEXAS 75240
TELEPHONE 214) 699-8002 TELEX 730485

JOHNSON/ROMANOWITZ/ARCHITECTS/LEXINGTON/KENTUCKY
301 EAST VINE STREET, SUITE A
TELEPHONE (606) 252-6781

DRAWN	PROJECT 82 149
CHECKED	DATE 12-30-82

STRUCTURAL

FOUNDATION PLAN

DRAWING S-201

ISSUED FOR CONSTRUCTION 05.10.83

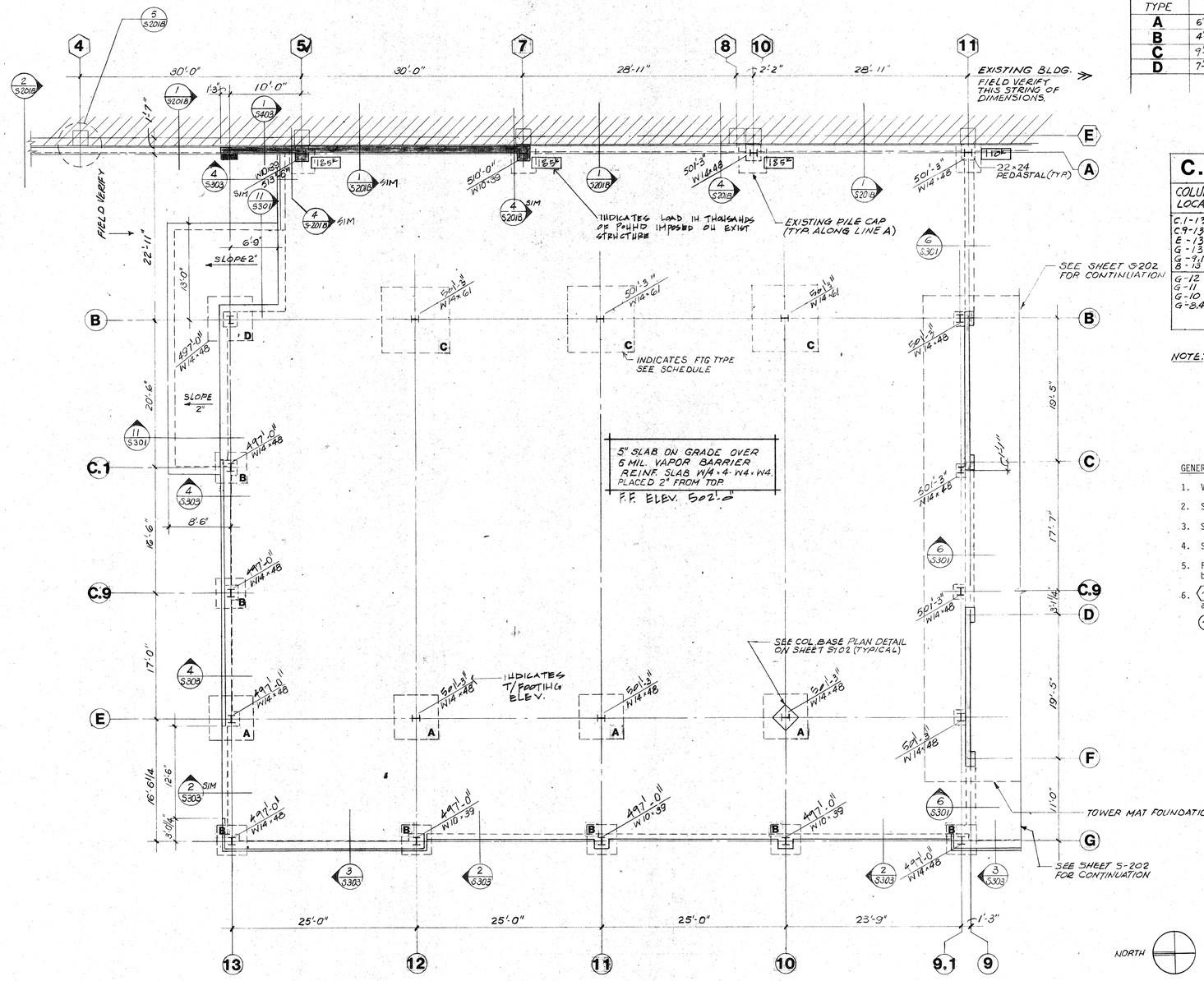

FOUNDATION & GROUND LEVEL AT BALLROOM

SCALE: 1/8" = 1'-0"

1 / S-201A

FOOTING SCHEDULE

TYPE	SIZE	REINFORCING	T/FTG. ELEV.
A	6'-0" x 6'-0" x 2'-0"	7-#6 E.W. BOTT.	SEE PLAN
B	4'-0" x 4'-0" x 2'-0"	5-#5 E.W. BOTT.	SEE PLAN
C	9'-0" x 9'-0" x 2'-6"	10-#8 E.W. BOTT.	SEE PLAN
D	7'-6" x 7'-6" x 2'-0"	9-#7 E.W. BOTT.	SEE PLAN

C.I.P. PILASTER SCHEDULE

COLUMN LOCATION	SIZE OF PILASTER	REINFORCING
C.1-13 C.9-13 E-13 G-13 G-9.1 B-13	24" x 24"	8-#8 VERT # 3 TIES @ 20" o.c.
G-12 G-11 G-10 G-8.4	20" x 20"	4-#8 VERT. # 3 TIES @ 16" o.c.

NOTE: 1. DOWEL ALL PILASTER REINFORCING INTO FOOTING AND HOOK 2'-0"
2. T/PILASTER EL = 501'-3" (TYP.)

GENERAL NOTES

1. Verify all dimensions and details with architect's drawings.
2. See Sheet S-101 for additional notes.
3. See Sheet S-102 for typical base plate detail.
4. See Sheet S-102 for typical details.
5. Final footing bearing elevations to be determined in field by the Soils Engineer.
6. (~) = indicates existing structure grid lines. Field verify all dimensions.
   (~) = indicates new construction grid lines.

CAPITOL PLAZA HOTEL
FRANKFORT / KENTUCKY

STATE OF KENTUCKY BEN WILEY YOUNG 10492 REGISTERED PROFESSIONAL ENGINEER

JOHNSON/ROMANOWITZ/ARCHITECTS/LEXINGTON/KENTUCKY
301 EAST VINE STREET, SUITE A
TELEPHONE (606) 252-6781

DRAWN	PROJECT 82149
CHECKED	DATE 3-23-83

STRUCTURAL

FOUNDATION & GROUND LEVEL PLAN AT BALLROOM

DRAWING S-201A

Intertech ENGINEERS INC
13150 COIT ROAD SUITE 125 DALLAS TEXAS 75240
TELEPHONE 214) 699-8000 TELEX 73-0455

ISSUED FOR CONSTRUCTION 05.10.83

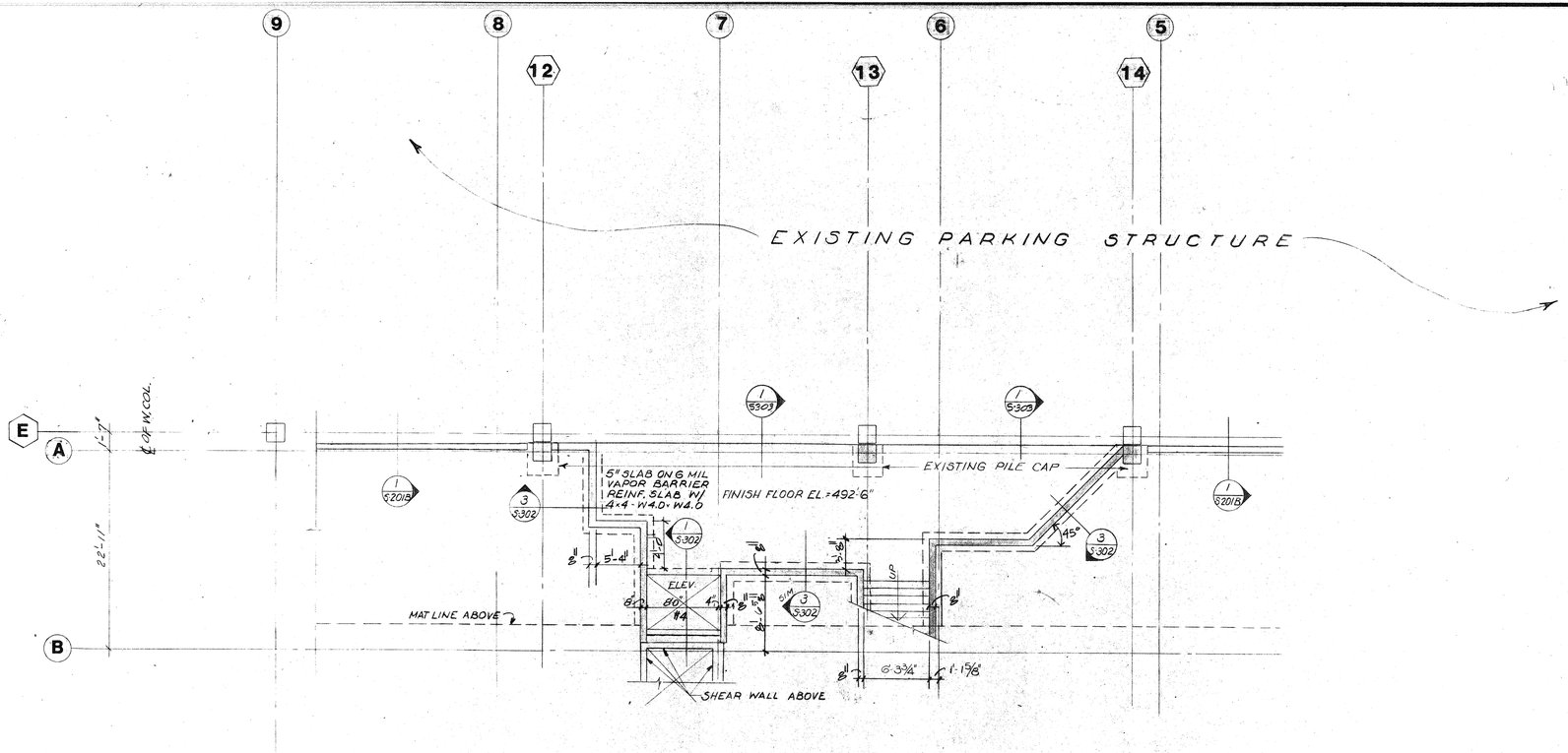

PARTIAL BASEMENT AND FOUNDATION PLAN

SCALE: 1/8" = 1'-0"

1/S201

NORTH

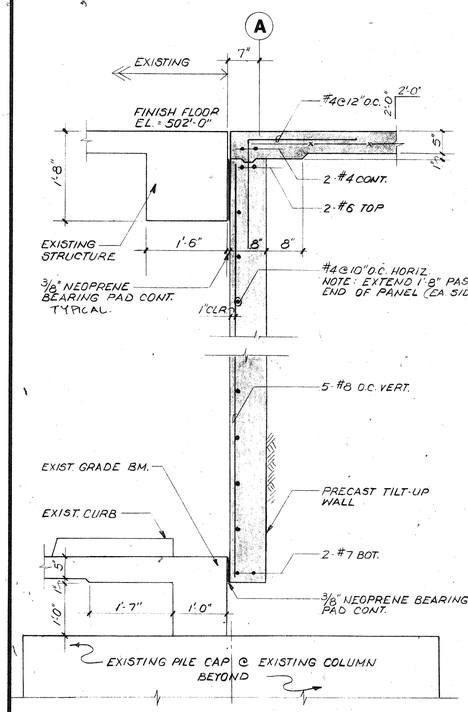

1

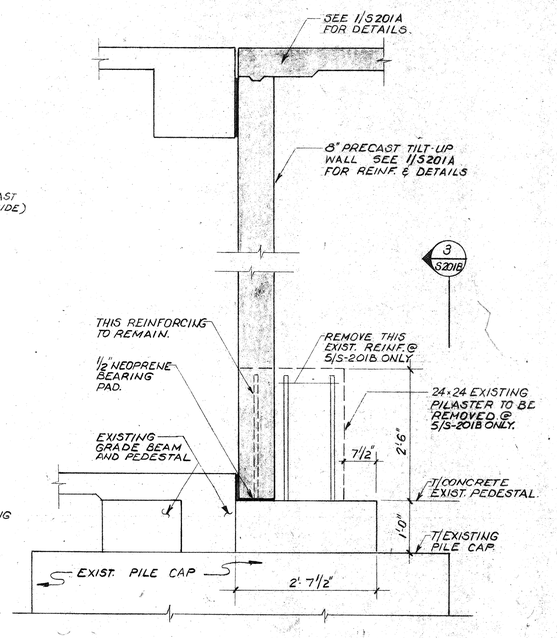

2

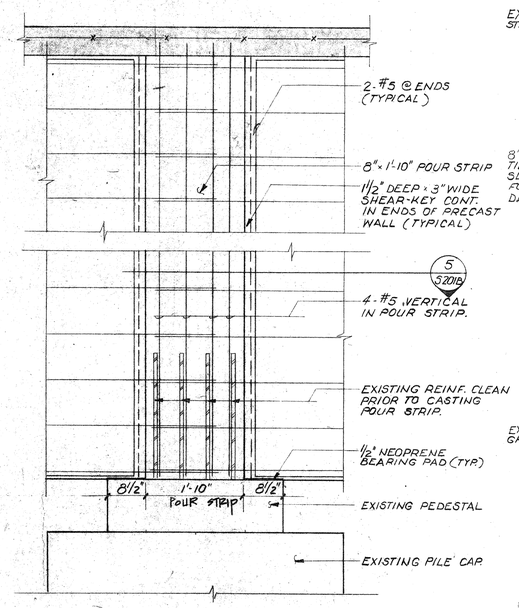

3

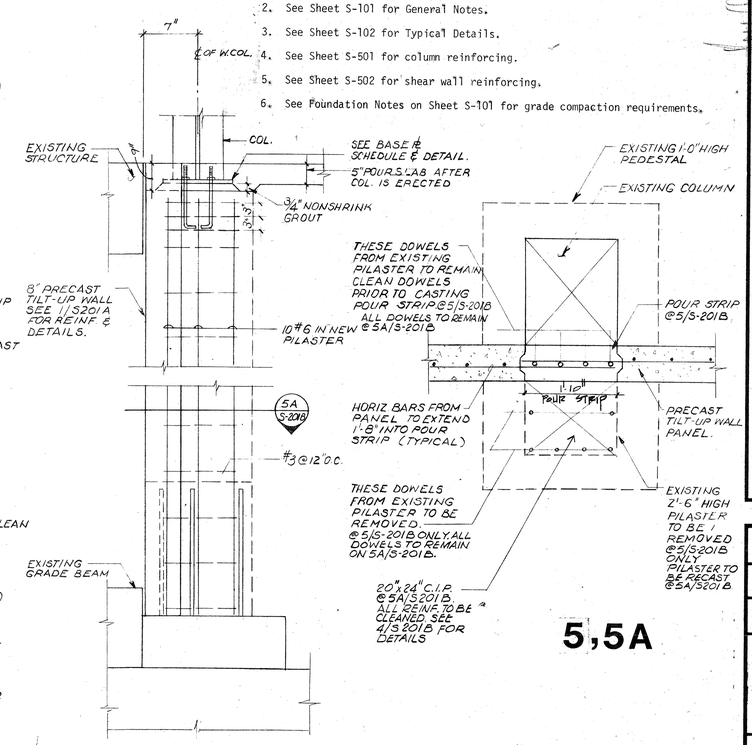

4

5,5A

NOTES:

1. Verify all dimensions and details with architect's drawings.
2. See Sheet S-101 for General Notes.
3. See Sheet S-102 for Typical Details.
4. See Sheet S-501 for column reinforcing.
5. See Sheet S-502 for shear wall reinforcing.
6. See Foundation Notes on Sheet S-101 for grade compaction requirements.

REVISED 3-23-83

ISSUED FOR CONSTRUCTION 05.10.83

Intertech ENGINEERS INC
13150 COIT ROAD SUITE 125 DALLAS TEXAS 75240
TELEPHONE 214) 699-8000 TELEX 73-0455

CAPITOL PLAZA HOTEL
FRANKFORT / KENTUCKY

JOHNSON / ROMANOWITZ / ARCHITECTS / LEXINGTON / KENTUCKY

STATE OF KENTUCKY BEN WILEY YOUNG 10492 REGISTERED PROFESSIONAL ENGINEER

DRAWN	PROJECT 82149
CHECKED	DATE 1-12-83

STRUCTURAL

PARTIAL BASEMENT

DRAWING S-201B

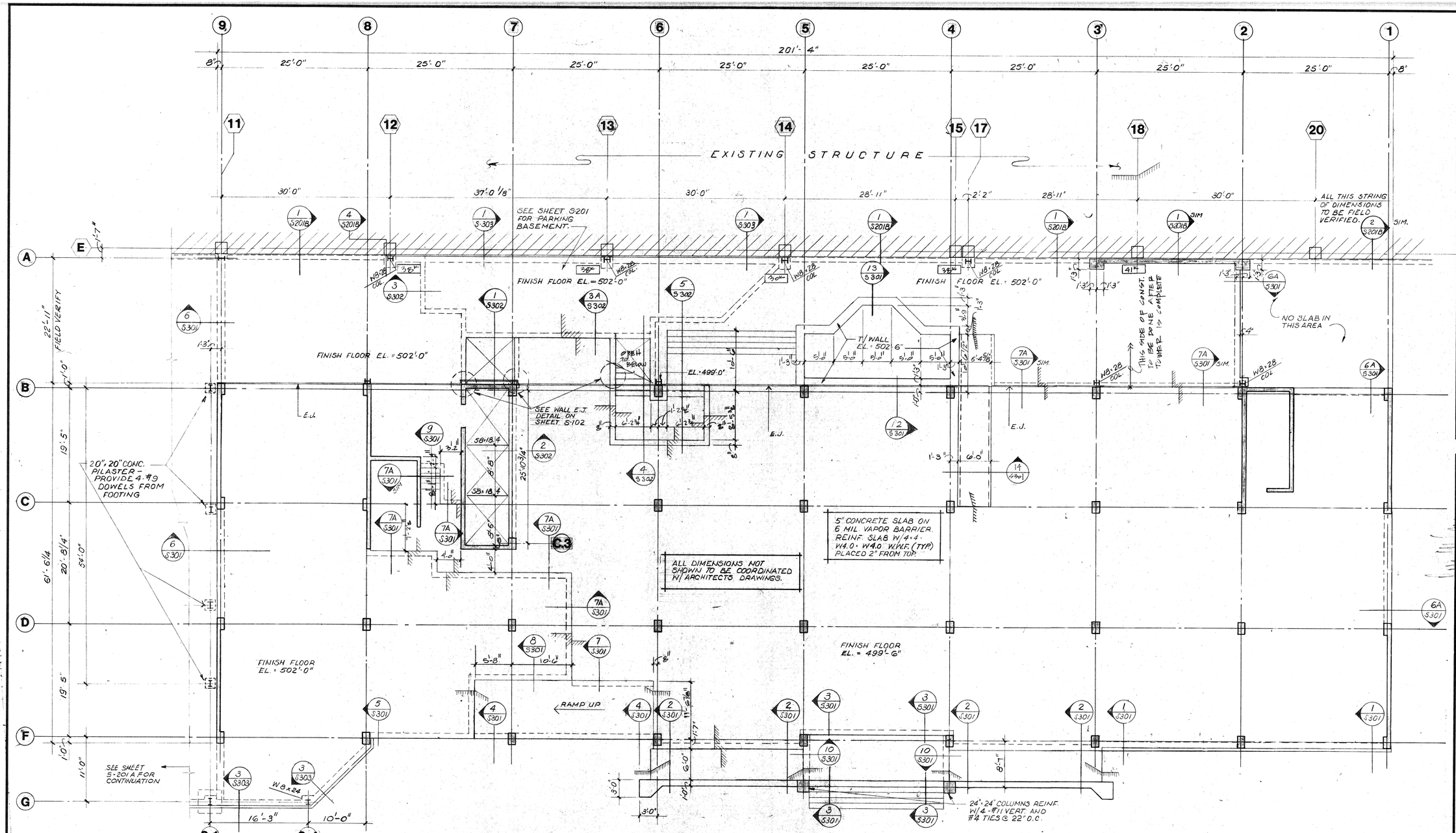

GROUND LEVEL FLOOR PLAN

SCALE: 1/8" = 1'-0"

1 / S201

NOTES:

1. Verify all dimensions and details with architect's drawings.
2. See Sheet S-101 for General Notes.
3. See Sheet S-102 for Typical Details.
4. See Sheet S-501 for column reinforcing.
5. See Sheet S-502 for shear wall reinforcing.
6. See Foundation Notes on Sheet S-101 for grade compaction requirements.

ISSUED FOR CONSTRUCTION 05.10.83

REVISED 3.23.83

Intertech ENGINEERS INC
13150 COIT ROAD SUITE 125 DALLAS TEXAS 75240
TELEPHONE 214) 699-8000 TELEX 73-0455

CAPITOL PLAZA HOTEL
FRANKFORT / KENTUCKY

JOHNSON / ROMANOWITZ / ARCHITECTS / LEXINGTON / KENTUCKY

DRAWN	PROJECT 82149
CHECKED	DATE 1-12-83

STRUCTURAL

GROUND LEVEL

DRAWING S-202

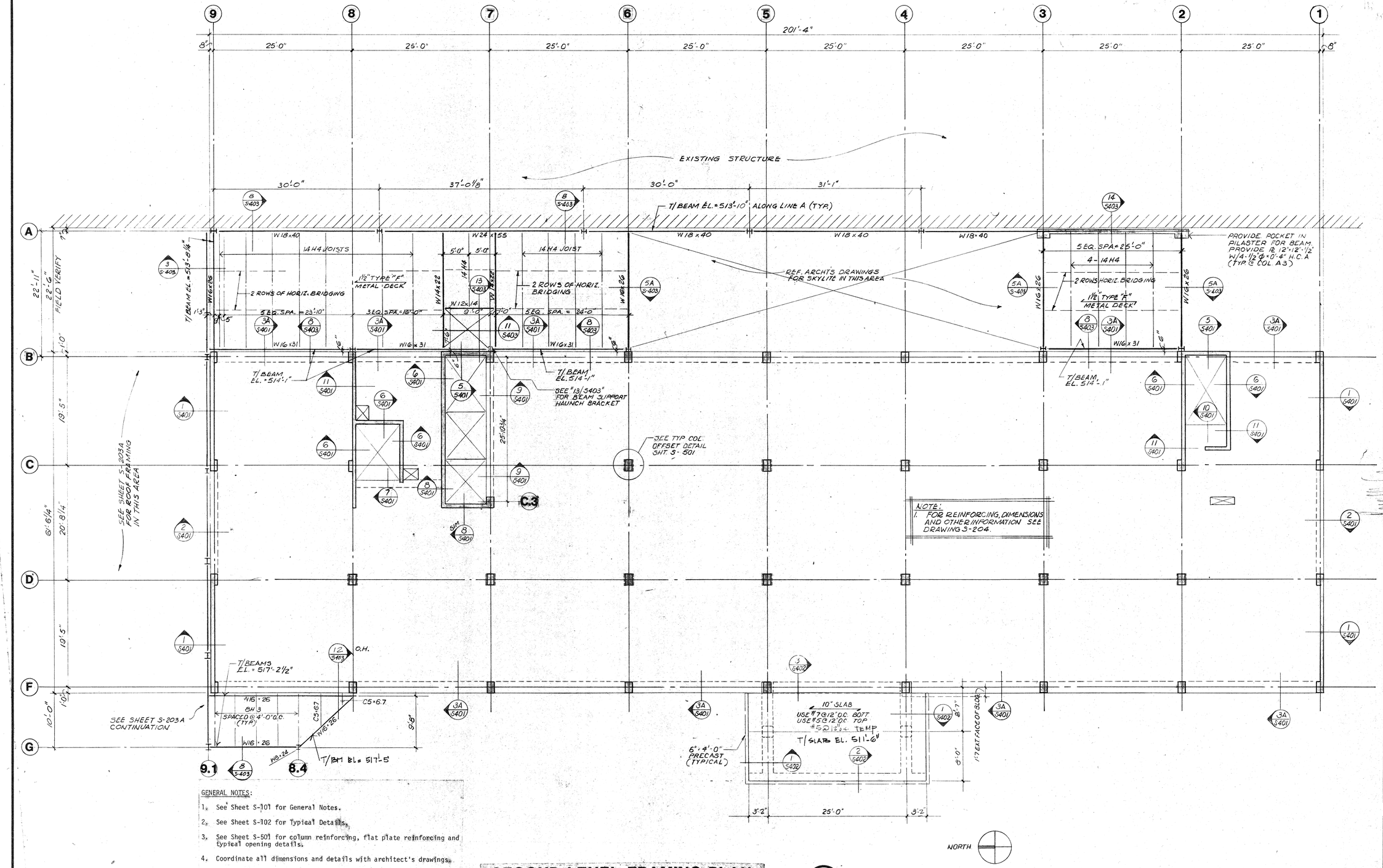

NOTE:
1. FOR REINFORCING, DIMENSIONS AND OTHER INFORMATION SEE DRAWING S-204.

GENERAL NOTES:

1. See Sheet S-101 for General Notes.
2. See Sheet S-102 for Typical Details.
3. See Sheet S-501 for column reinforcing, flat plate reinforcing and typical opening details.
4. Coordinate all dimensions and details with architect's drawings.
5. Slab thickness = 8 inches.
   ES = Edge strip.
   MS = middle strip.
   CS = column strip.
6. See Sheet S-502 for all wall reinforcing.
7. Reinforcing placing sequence for slab shall be as follows:
   a. Place N-S bottom bars first.
   b. Place E-W bottom bars second.
   c. Place E-W top bars third.
   d. Place N-S top bars last.

   Note: Top and bottom concrete cover shall be 3/4".

SECOND LEVEL FRAMING PLAN

SCALE: 1/8" = 1'-0"

1 / S-203

REVISED 3-23-83

ISSUED FOR CONSTRUCTION 05.10.83

Intertech ENGINEERS INC
13150 COIT ROAD SUITE 125 DALLAS TEXAS 75240
TELEPHONE 214) 699-8000 TELEX 73-0455

CAPITOL PLAZA HOTEL
FRANKFORT / KENTUCKY

JOHNSON / ROMANOWITZ / ARCHITECTS / LEXINGTON / KENTUCKY

STATE OF KENTUCKY ★ BEN WILEY YOUNG 10492 REGISTERED PROFESSIONAL ENGINEER

DRAWN	PROJECT 82149
CHECKED	DATE 1-12-83

STRUCTURAL

SECOND LEVEL FRAMING PLAN

DRAWING S-203

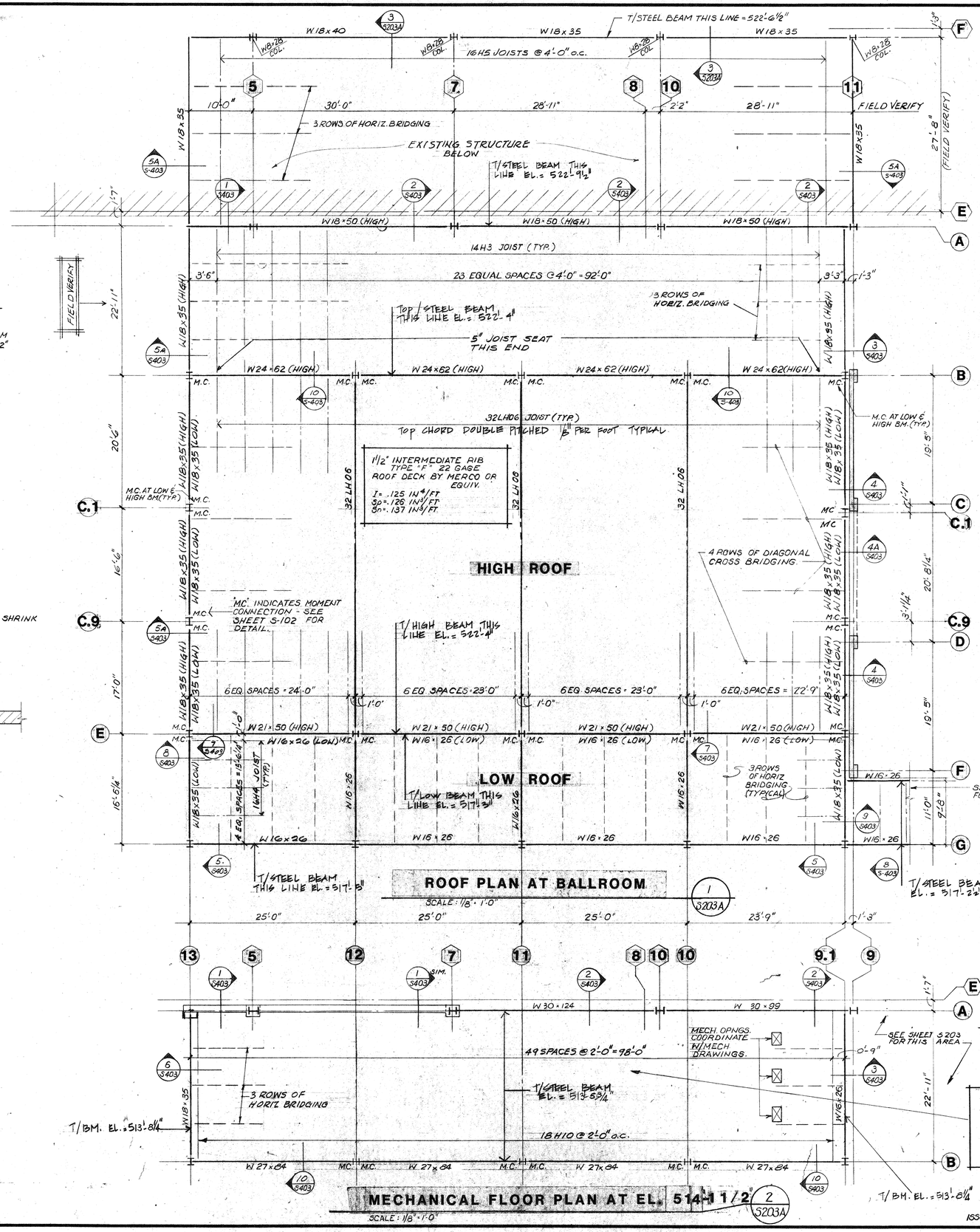

3

GENERAL NOTES:

1. Verify all dimensions and details with architect's drawings.
2. See Sheet S-101 for additional notes.
3. See Sheet S-102 for typical details.
4. See Sheet S-101 for metal deck welding requirements.
5. Mechanical floor designed for 250 psf superimposed load.
6. Refer to mechanical drawings for roof drains and any other openings through roof.
7. (~) = indicates existing structure grid lines. Field verify dimensions.

   (~) = indicates new construction grid lines.

CAPITOL PLAZA HOTEL
FRANKFORT / KENTUCKY

© JOHNSON/ROMANOWITZ/ARCHITECTS/LEXINGTON/KENTUCKY
301 EAST VINE STREET, SUITE A
TELEPHONE (606) 252-6781

DRAWN	PROJECT 82149
CHECKED	DATE 3-23-83

STRUCTURAL

BALLROOM ROOF PLAN

DRAWING S-203A

Intertech ENGINEERS INC
13150 COIT ROAD SUITE 125 DALLAS TEXAS 75240
TELEPHONE 214) 699-8000 TELEX 73-0455

ISSUED FOR CONSTRUCTION 05.10.83

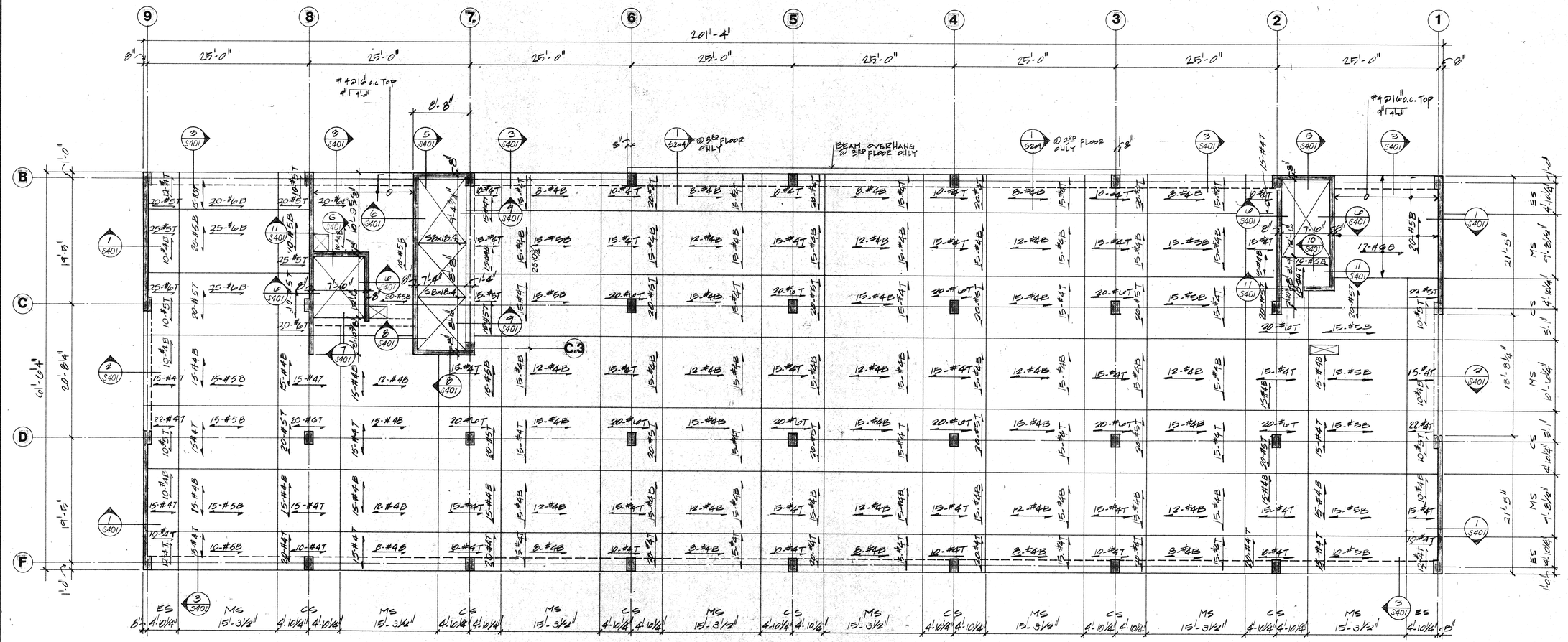

TYPICAL LEVEL FRAMING PLAN

1/8" = 1'-0"

(3RD THRU 8TH)

1 / 6204

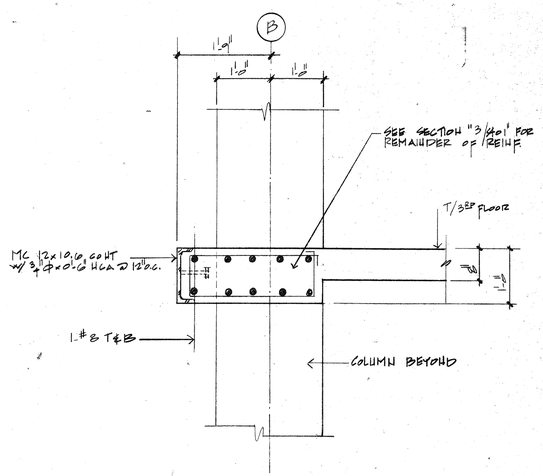

1

NORTH

GENERAL NOTES:

1. See Sheet S-101 for General Notes.
2. See Sheet S-102 for Typical Details.
3. See Sheet S-501 for column reinforcing, flat plate reinforcing and typical opening details.
4. Coordinate all dimensions and details with architect's drawings.
5. Slab thickness = 8 inches.
   ES = Edge strip.
   MS = middle strip.
   CS = column strip.
6. See Sheet S-502 for all wall reinforcing.
7. Reinforcing placing sequence for slab shall be as follows:
   a. Place N-S bottom bars first.
   b. Place E-W bottom bars second.
   c. Place E-W top bars third.
   d. Place N-S top bars last.

   Note: Top and bottom concrete cover shall be 3/4".

REVISED 3-9-83 S.B.

Intertech ENGINEERS INC
13150 COIT ROAD SUITE 125 DALLAS TEXAS 75240
TELEPHONE 214) 699-8000 - TELEX 73-0455

CAPITOL PLAZA HOTEL
FRANKFORT / KENTUCKY

STATE OF KENTUCKY ★ BEN WILEY YOUNG 10492 REGISTERED ENGINEER ★ PROFESSIONAL

JOHNSON/ROMANOWITZ/ARCHITECTS/LEXINGTON/KENTUCKY

DRAWN	PROJECT 82149
CHECKED	DATE 1-12-83

STRUCTURAL

THIRD THRU EIGHTH FLOOR PLAN

DRAWING S-204

ISSUED FOR CONSTRUCTION 05.10.83

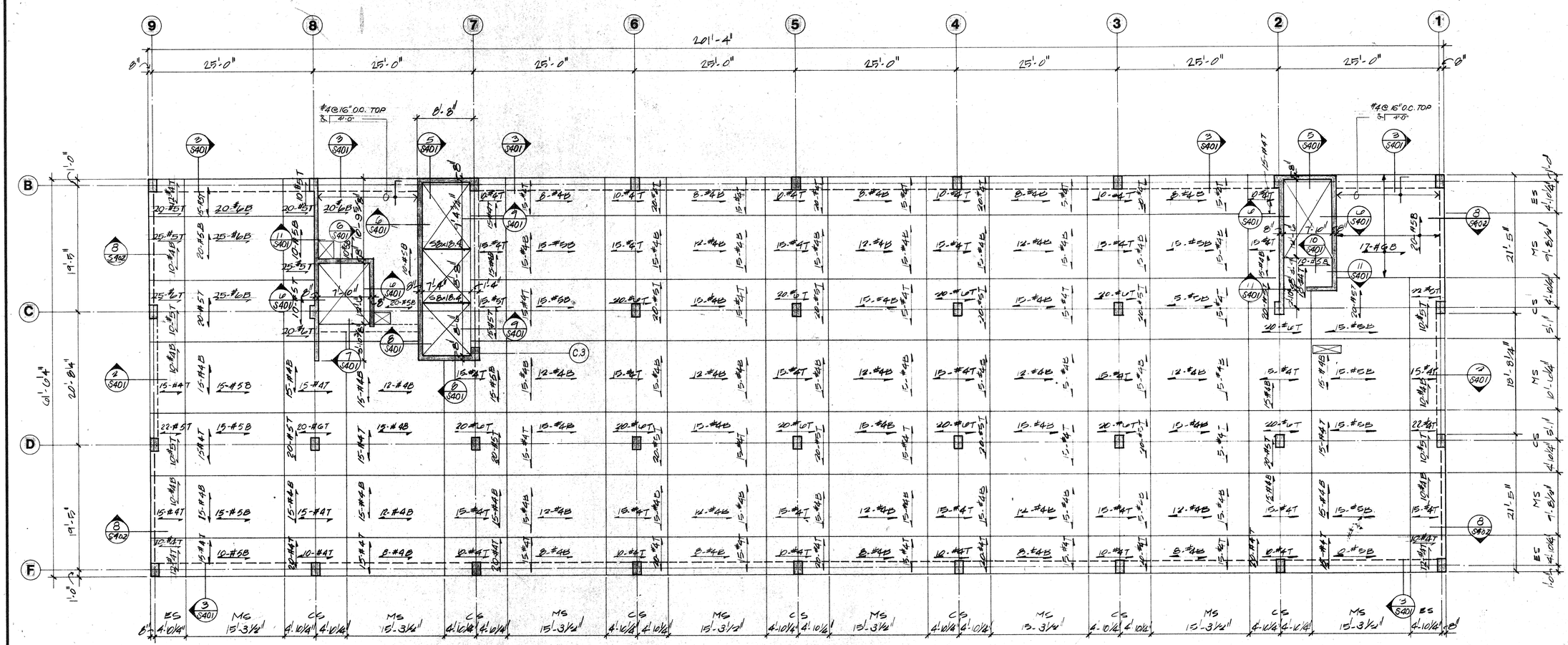

NINTH LEVEL FRAMING PLAN

1/8" = 1'-0"

(1 / S205)

NOTE: FLOOR CONSTRUCTION SHALL BE OF f'c = 5,000 psi

NORTH

GENERAL NOTES:

1. See Sheet S-101 for General Notes.
2. See Sheet S-102 for Typical Details.
3. See Sheet S-501 for column reinforcing, flat plate reinforcing and typical opening details.
4. Coordinate all dimensions and details with architect's drawings.
5. Slab thickness = 8 inches.
   ES = Edge strip.
   MS = middle strip.
   CS = column strip.
6. See Sheet S-502 for all wall reinforcing.
7. Reinforcing placing sequence for slab shall be as follows:
   a. Place N-S bottom bars first.
   b. Place E-W bottom bars second.
   c. Place E-W top bars third.
   d. Place N-S top bars last.

   Note: Top and bottom concrete cover shall be 3/4".

Intertech ENGINEERS INC
13150 COIT ROAD SUITE 125 DALLAS TEXAS 75240
TELEPHONE 214) 699-8000 TELEX 73-0455

CAPITOL PLAZA HOTEL
FRANKFORT / KENTUCKY

STATE OF KENTUCKY
BEN WILEY YOUNG
10492
REGISTERED PROFESSIONAL ENGINEER

JOHNSON / ROMANOWITZ / ARCHITECTS / LEXINGTON / KENTUCKY

DRAWN	PROJECT 82149
CHECKED	DATE 5-20-83

STRUCTURAL

NINTH FLOOR PLAN

DRAWING S-205

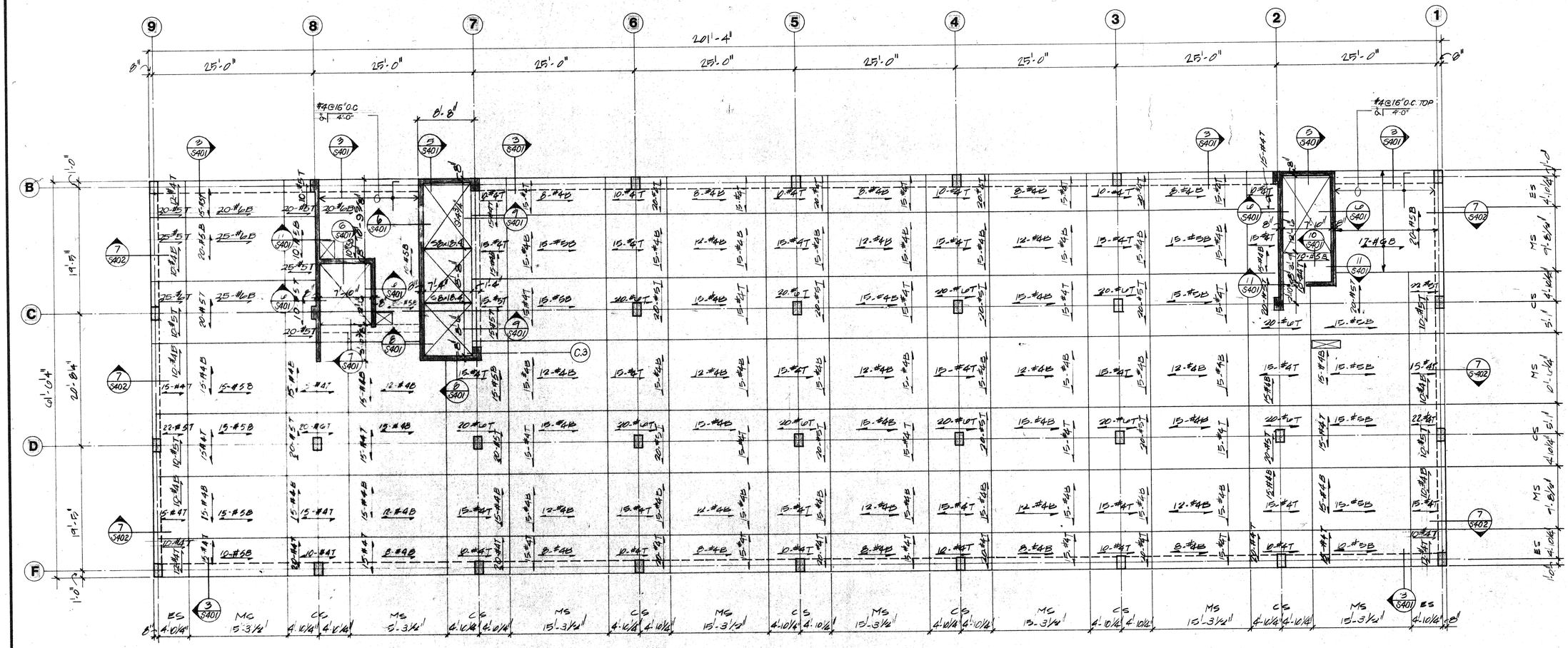

TENTH LEVEL FRAMING PLAN

1/8" = 1'-0"

NOTE: FLOOR CONSTRUCTION SHALL BE OF f'c=5,000 psi

NORTH

GENERAL NOTES:

1. See Sheet S-101 for General Notes.
2. See Sheet S-102 for Typical Details.
3. See Sheet S-501 for column reinforcing, flat plate reinforcing and typical opening details.
4. Coordinate all dimensions and details with architect's drawings.
5. Slab thickness = 8 inches.
   ES = Edge strip.
   MS = middle strip.
   CS = column strip.
6. See Sheet S-502 for all wall reinforcing.
7. Reinforcing placing sequence for slab shall be as follows:
   a. Place N-S bottom bars first.
   b. Place E-W bottom bars second.
   c. Place E-W top bars third.
   d. Place N-S top bars last.

   Note: Top and bottom concrete cover shall be 3/4".

Intertech ENGINEERS INC.
13150 COIT ROAD SUITE 125 DALLAS TEXAS 75240
TELEPHONE 214 699-8000 TELEX 73-0455

CAPITOL PLAZA HOTEL
FRANKFORT / KENTUCKY

STATE OF KENTUCKY ★ BEN WILEY YOUNG 10482 REGISTERED PROFESSIONAL ENGINEER ★

JOHNSON / ROMANOWITZ / ARCHITECTS / LEXINGTON / KENTUCKY

DRAWN	PROJECT 82149
CHECKED	DATE 5-20-83

STRUCTURAL

TENTH FLOOR PLAN

DRAWING S-206

ROOF LEVEL FRAMING PLAN

1/8" = 1'-0"

1 / S207

GENERAL NOTES:

1. See Sheet S-101 for General Notes.
2. See Sheet S-102 for Typical Details.
3. See Sheet S-501 for column reinforcing, flat plate reinforcing and typical opening details.
4. Coordinate all dimensions and details with architect's drawings.
5. Slab thickness = 8 inches.
   ES = Edge strip.
   MS = middle strip.
   CS = column strip.

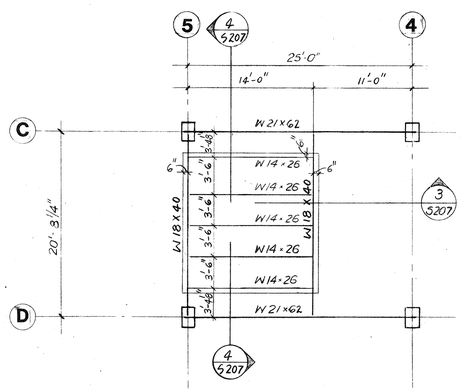

NOTES:

1. ALL STRUCTURAL STEEL FOR HELISTOP FRAMING SHALL BE A-36
2. CONCRETE SLAB OVER METAL DECK SHALL BE f'c = 3000 psi AT 28 DAYS (NORMAL WEIGHT)
3. HELISTOP FRAMING DESIGNED TO ACCOMODATE "JET RANGER - MODEL 206-B" MAXIMUM WEIGHT 4000 POUNDS, STATIC WEIGHT = 2000 POUNDS.

HELISTOP FRAMING PLAN

SCALE: 1/8" = 1'-0"

2 / S207

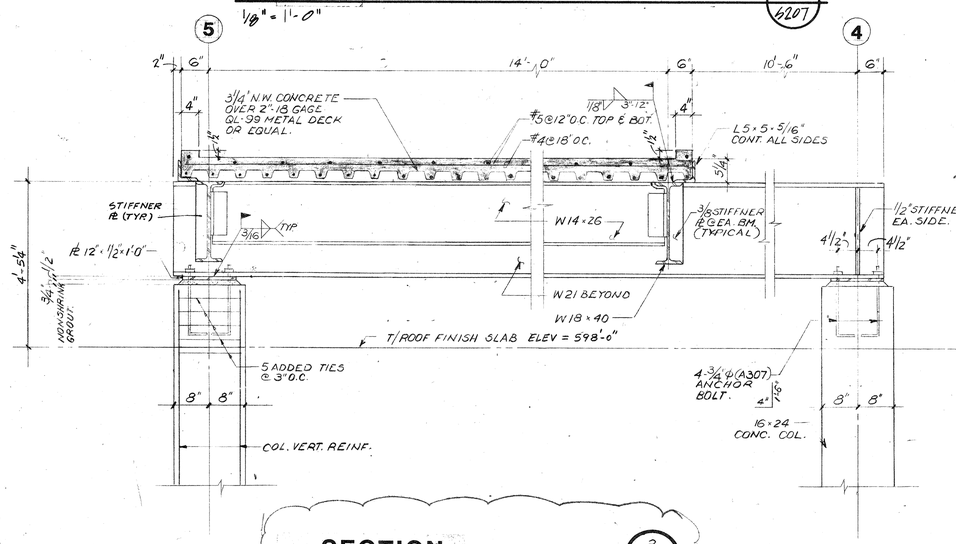

SECTION

SCALE: 3/4" = 1'-0"

3 / S207

NOTES CONTINUED:

6. See Sheet S-502 for all wall reinforcing.
7. Reinforcing placing sequence for slab shall be as follows:
   a. Place N-S bottom bars first.
   b. Place E-W bottom bars second.
   c. Place E-W top bars third.
   d. Place N-S top bars last.

   Note: Top and bottom concrete cover shall be 3/4".

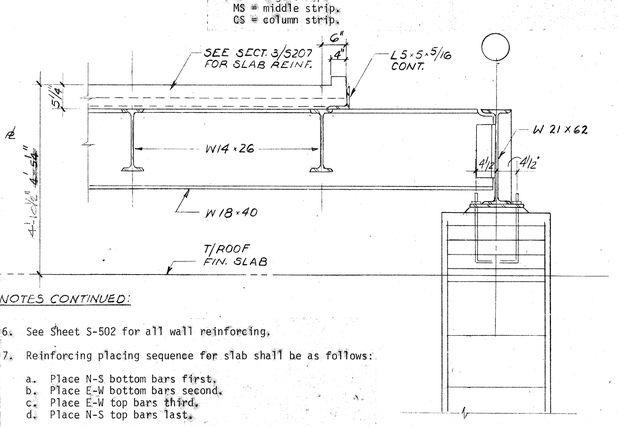

SECTION

SCALE: 3/4" = 1'-0"

4 / S207

REVISED 6-28-83

Intertech ENGINEERS INC
13150 COIT ROAD SUITE 125 DALLAS TEXAS 75240
TELEPHONE 214) 699-8000 TELEX 73-0455

CAPITOL PLAZA HOTEL
FRANKFORT / KENTUCKY

STATE OF KENTUCKY BEN WILEY YOUNG 10492 PROFESSIONAL ENGINEER

JOHNSON / ROMANOWITZ / ARCHITECTS / LEXINGTON / KENTUCKY

DRAWN	PROJECT
P.N., S.B.	82149
CHECKED	DATE
S.B.	6-13-83

STRUCTURAL

ROOF LEVEL PLAN

DRAWING S-207

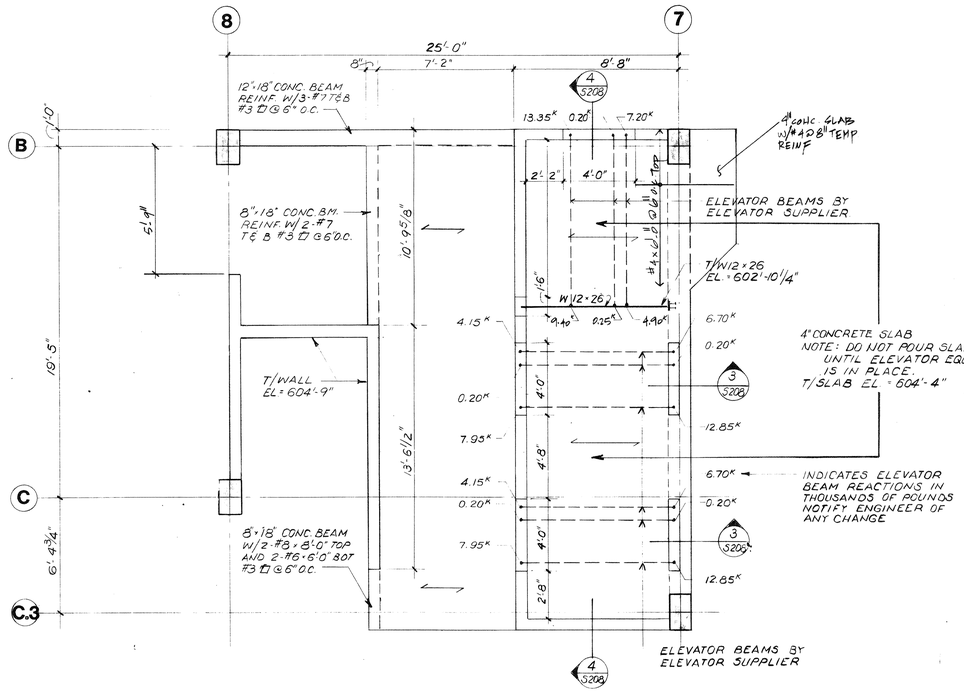

ELEVATOR MACHINE ROOM FRAMING PLAN

SCALE: 1/4" = 1'-0" (1 / 5208)

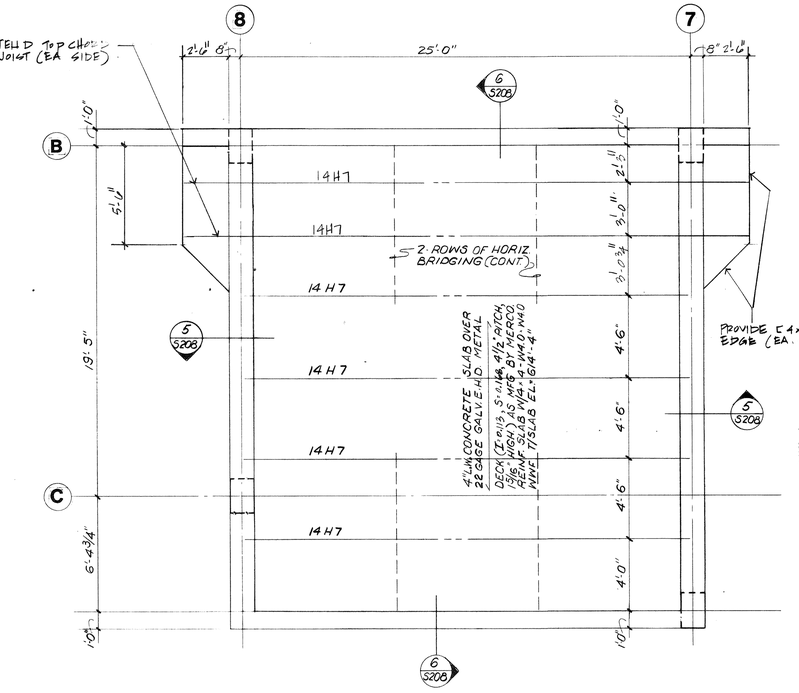

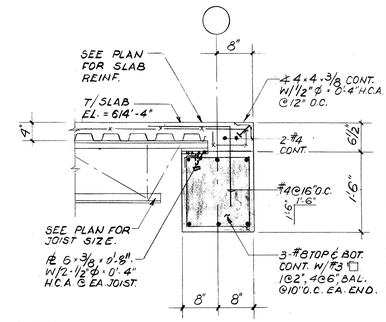

SECTION 5/5208

SCALE: 3/4" = 1'-0"

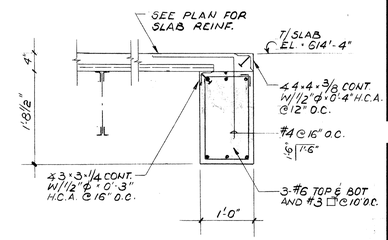

ELEVATOR PENTHOUSE ROOF FRAMING PLAN

SCALE: 1/4" = 1'-0" (2 / 5208)

SECTION 6/5208

SCALE: 3/4" = 1'-0"

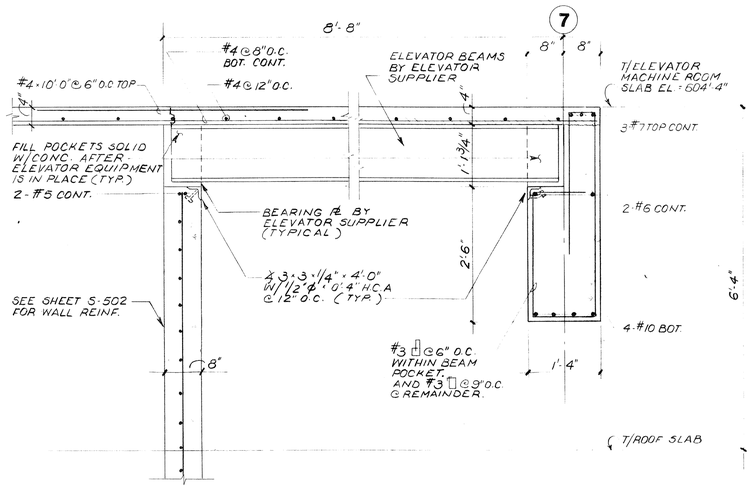

SECTION 3/5208

SCALE: 3/4" = 1'-0"

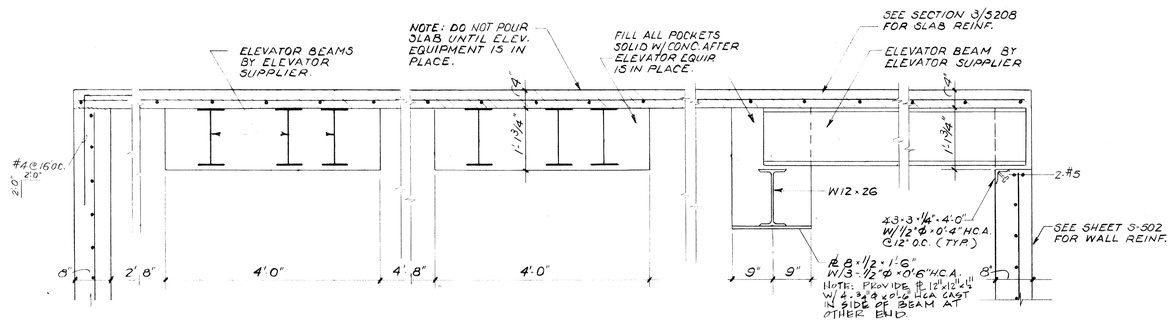

SECTION 4/5208

SCALE: 3/4" = 1'-0"

CAPITOL PLAZA HOTEL

FRANKFORT / KENTUCKY

JOHNSON / ROMANOWITZ / ARCHITECTS / LEXINGTON / KENTUCKY

DRAWN	PROJECT
P.N.	82149
CHECKED	DATE
	6-21-83

STRUCTURAL

PENTHOUSE FLOOR & ROOF FRAMING PLAN

DRAWING S-208

Intertech ENGINEERS INC.
13150 COIT ROAD SUITE 125 DALLAS TEXAS 75240
TELEPHONE 214) 699-8000 TELEX 73-0455

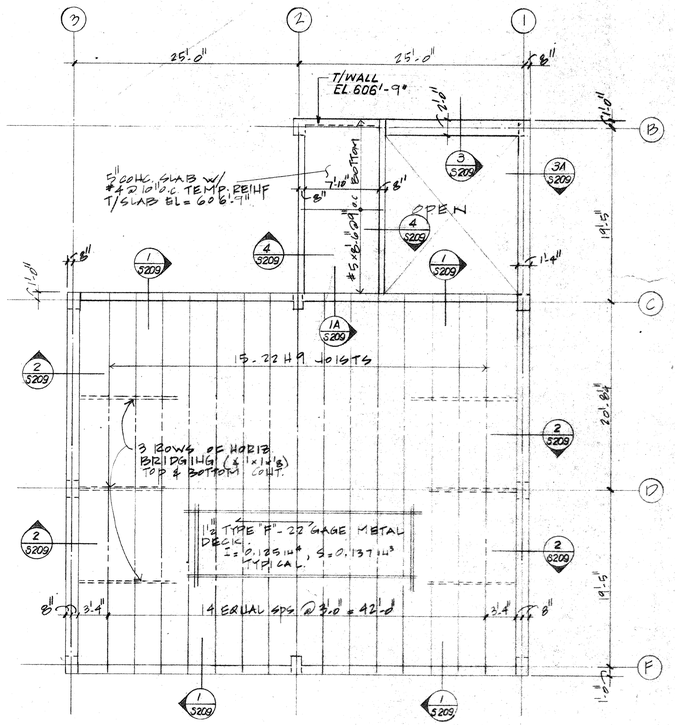

NOTE: COORDINATE ALL EMBED ITEMS FOR PRECAST CONNECTION W/ PRECAST SUPPLIER.

PENTHOUSE CONDO ROOF FRAMING PLAN

SCALE: 1/8" = 1'-0"

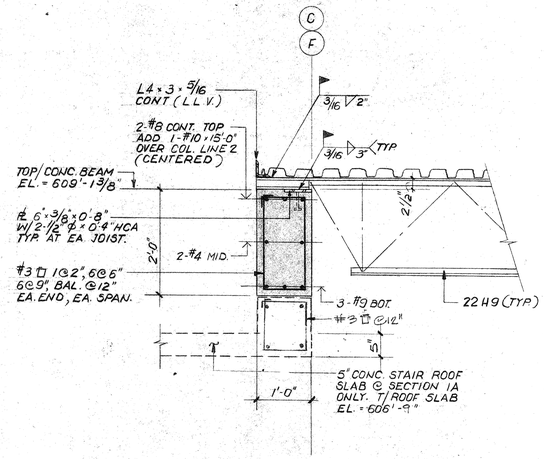

1 1A

SCALE: 3/4" = 1'-0" (TYPICAL U.N.O.)

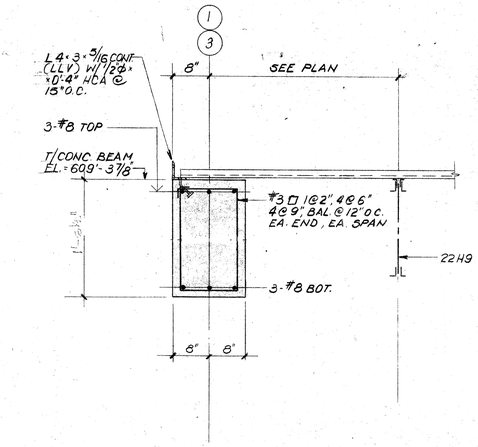

2

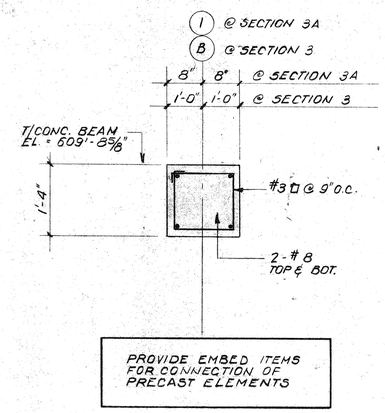

3 3A

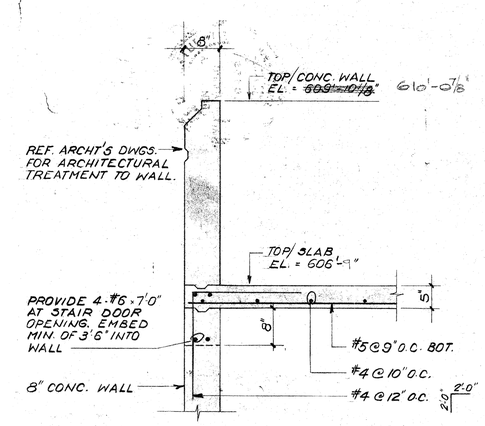

4

CAPITOL PLAZA HOTEL
FRANKFORT / KENTUCKY

STATE OF KENTUCKY BEN WILEY YOUNG 10492 REGISTERED PROFESSIONAL ENGINEER

© JOHNSON / ROMANOWITZ / ARCHITECTS / LEXINGTON / KENTUCKY
301 EAST VINE STREET, SUITE A
TELEPHONE (606) 252-6781

DRAWN	PROJECT
PN	82149
CHECKED	DATE 6-27-83

STRUCTURAL

PENTHOUSE CONDO ROOF FRAMING PLAN AND SECTIONS

DRAWING
S-209

Intertech ENGINEERS INC
13150 COIT ROAD SUITE 125 DALLAS TEXAS 75240
TELEPHONE 214) 699-8000 TELEX 73-0455

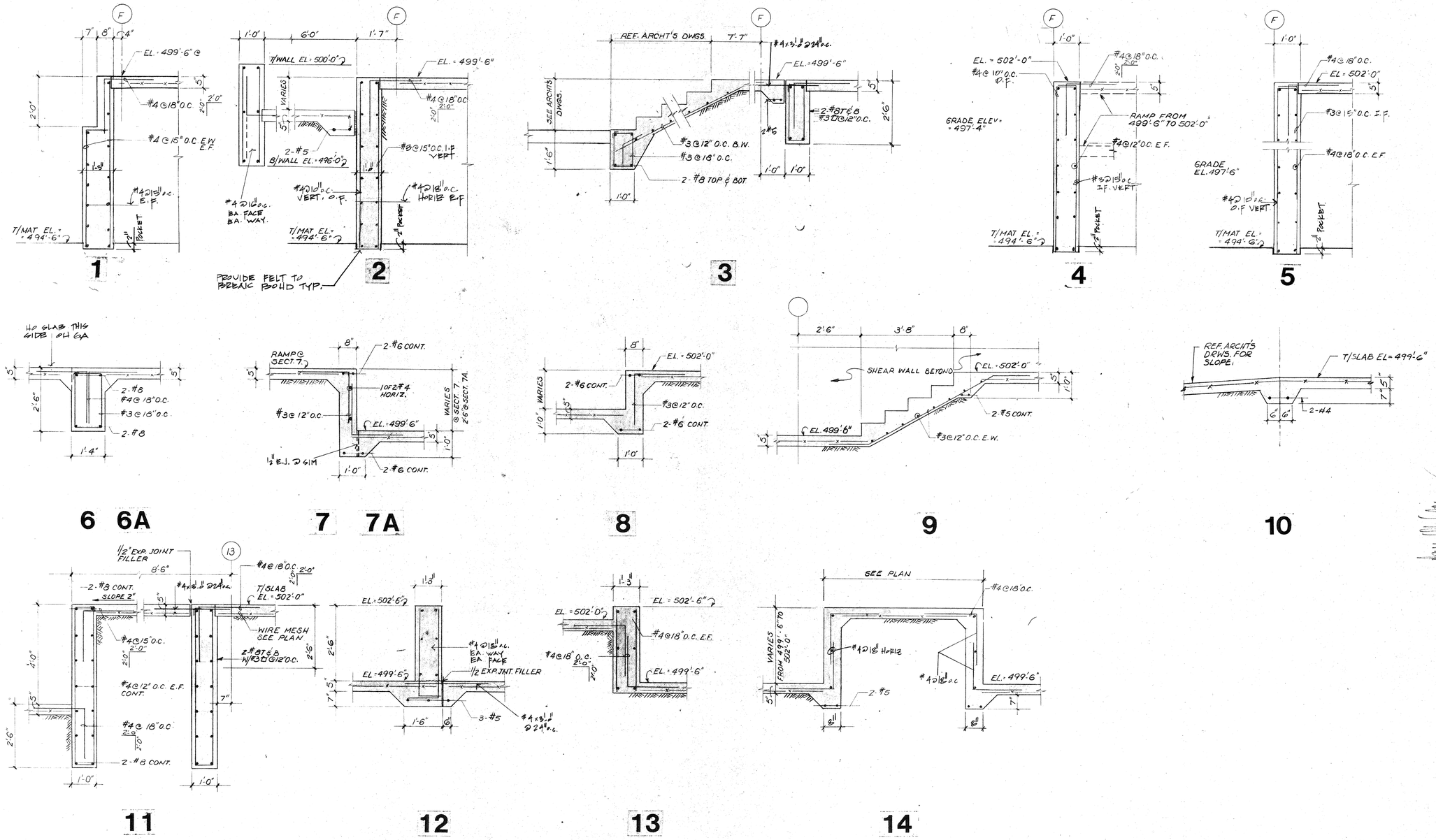

CAPITOL PLAZA HOTEL
FRANKFORT / KENTUCKY

STATE OF KENTUCKY
BEN WILEY YOUNG
10492
REGISTERED PROFESSIONAL ENGINEER

JOHNSON / ROMANOWITZ / ARCHITECTS / LEXINGTON / KENTUCKY

DRAWN	PROJECT 82149
CHECKED	DATE 12-30-82

STRUCTURAL

FOUNDATION SECTIONS & DETAILS

DRAWING S-301

REVISED 3-23-83

ISSUED FOR CONSTRUCTION 05.10.83

Intertech ENGINEERS INC
13150 COIT ROAD SUITE 125 DALLAS TEXAS 75240
TELEPHONE 214) 699-8000 TELEX 73-0455

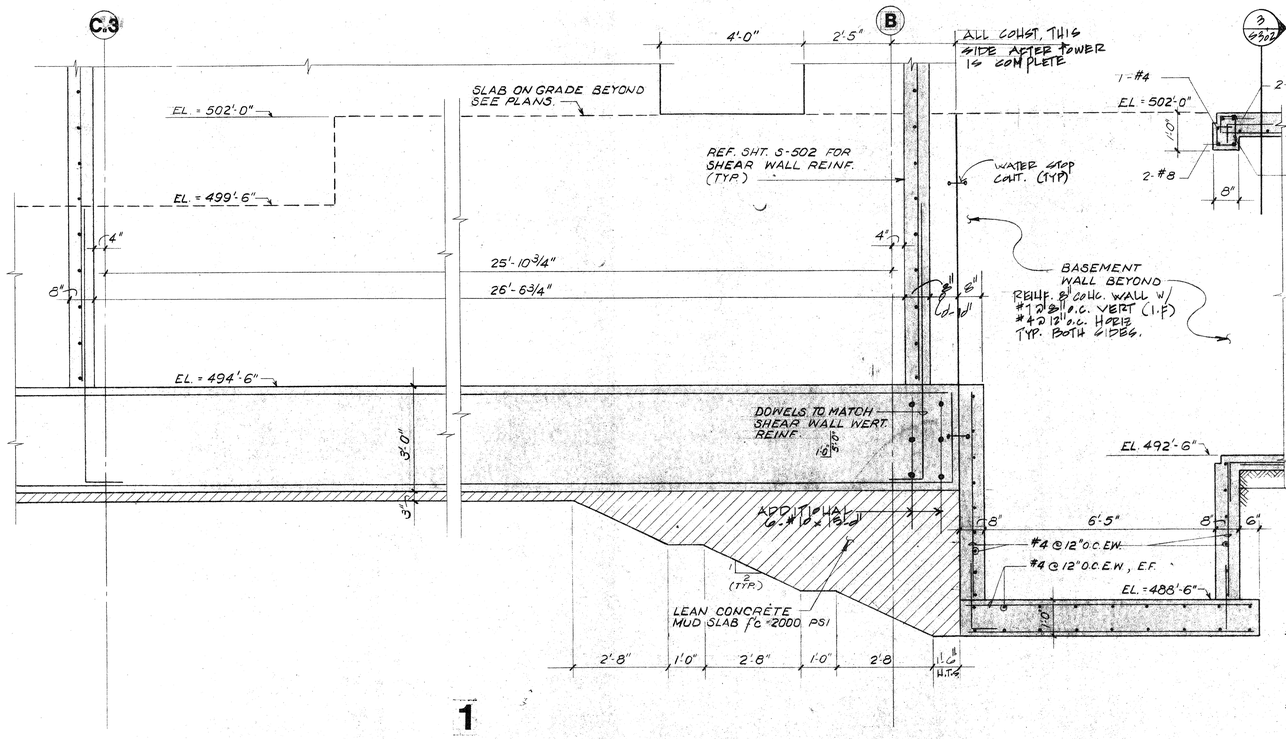

1

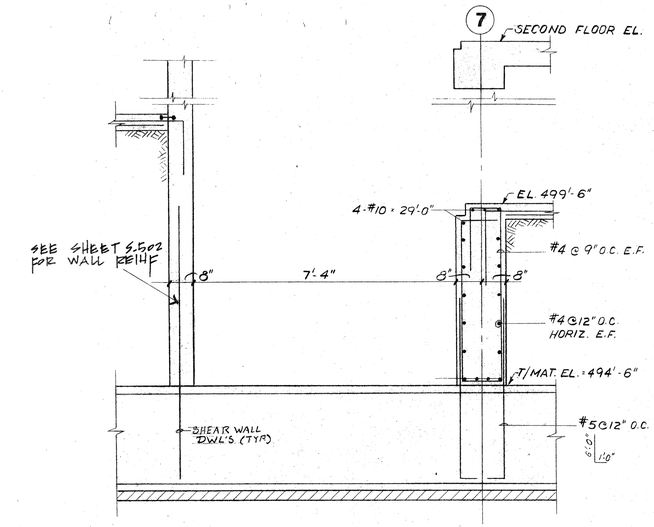

2

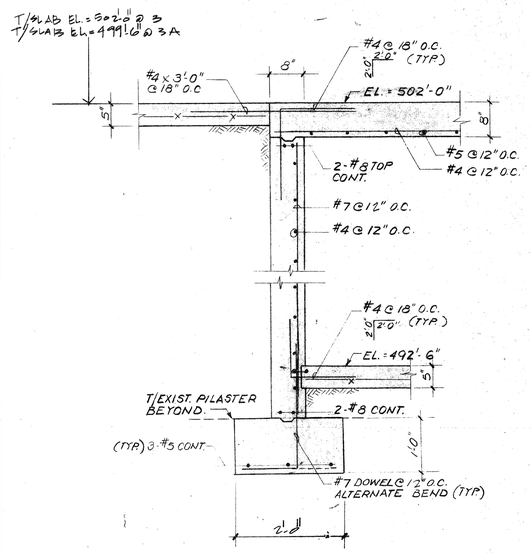

3 3A

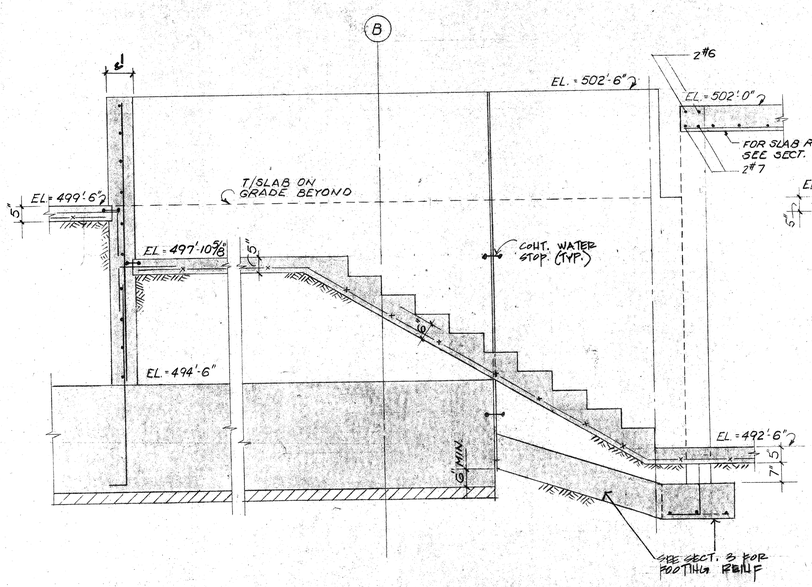

4

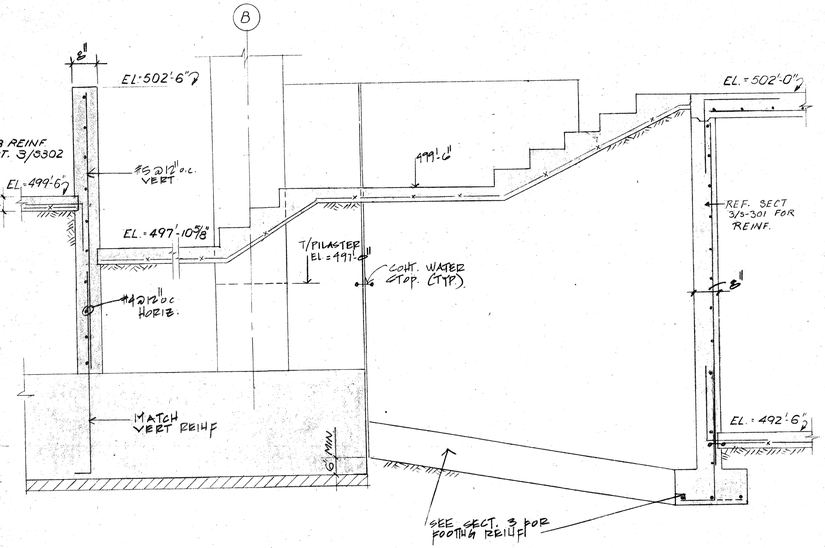

5

CAPITOL PLAZA HOTEL
FRANKFORT / KENTUCKY

STATE OF KENTUCKY BEN WILEY YOUNG 10492 REGISTERED PROFESSIONAL ENGINEER

© JOHNSON/ROMANOWITZ/ARCHITECTS/LEXINGTON/KENTUCKY
301 EAST VINE STREET, SUITE A TELEPHONE (606) 252-6781

DRAWN	PROJECT 82149
CHECKED	DATE 1-12-83

STRUCTURAL

FOUNDATION SECTIONS & DETAILS

DRAWING S-302

Intertech ENGINEERS INC
13150 COIT ROAD SUITE 125 DALLAS TEXAS 75240
TELEPHONE 214) 699-8000 TELEX 73-0455

ISSUED FOR CONSTRUCTION 05

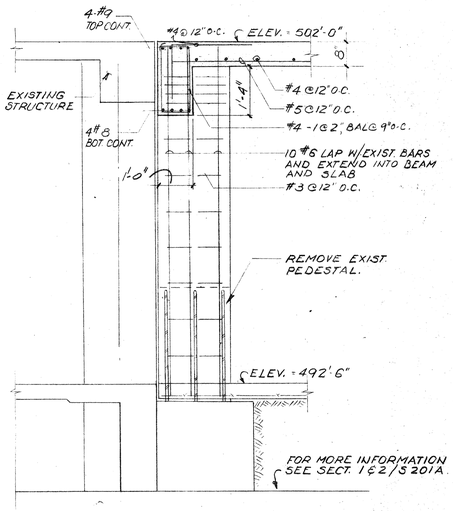

1

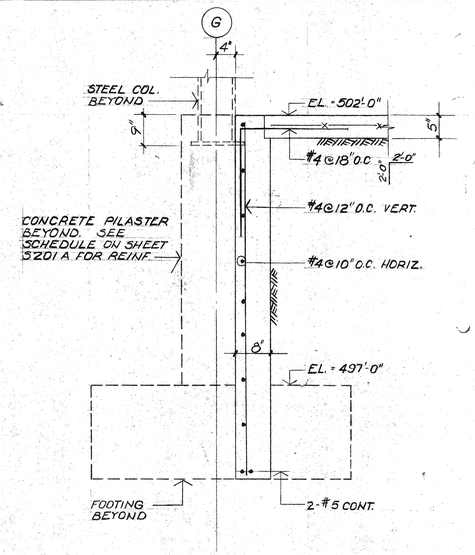

2

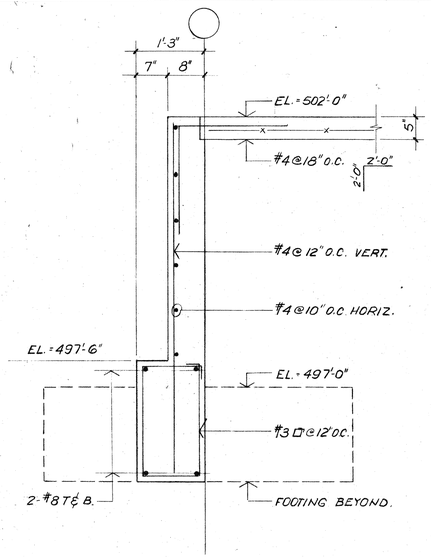

3

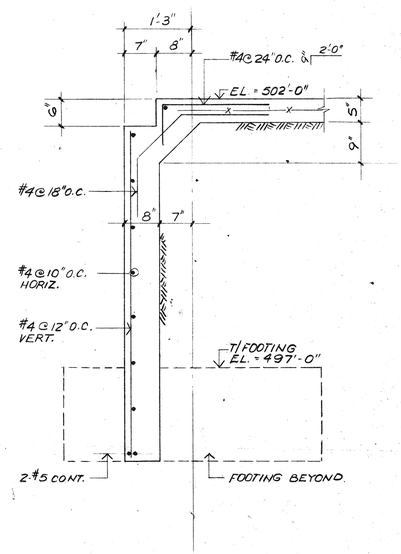

4

REVISED 3-23-83

ISSUED FOR CONSTRUCTION 05.10.83

Intertech
ENGINEERS INC
13150 COIT ROAD SUITE 125 DALLAS TEXAS 75240
TELEPHONE 214) 699-8000 TELEX 73-0455

STATE OF KENTUCKY BEN WILEY YOUNG 10492 REGISTERED PROFESSIONAL ENGINEER

JOHNSON / ROMANOWITZ / ARCHITECTS / LEXINGTON / KENTUCKY

DRAWN	PROJECT 82149
CHECKED	DATE 1-12-83

STRUCTURAL

SECTIONS & DETAILS

DRAWING S-303

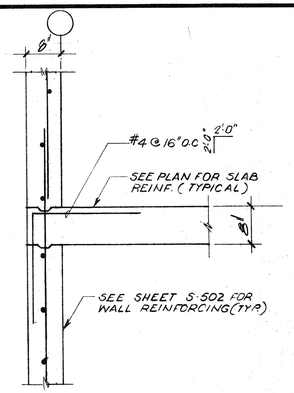

1

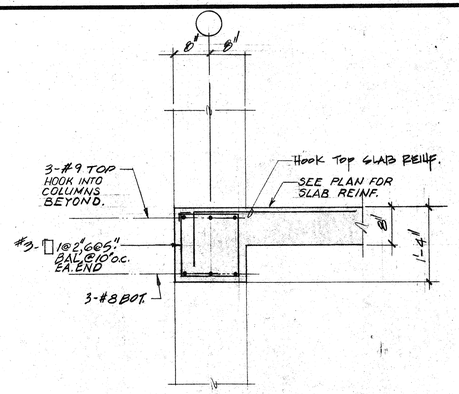

2

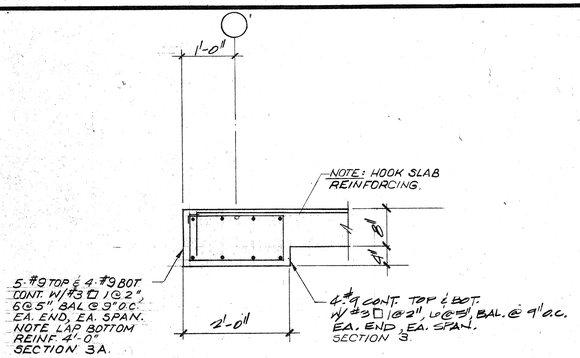

3 3A

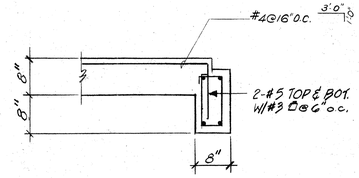

4

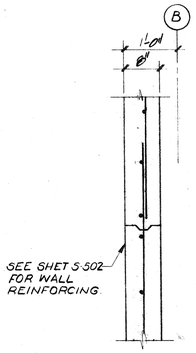

5

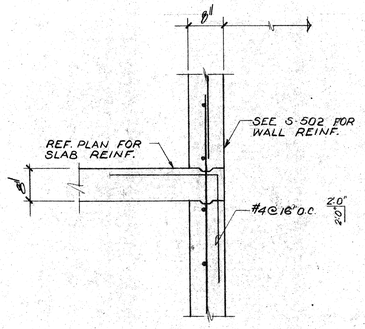

6

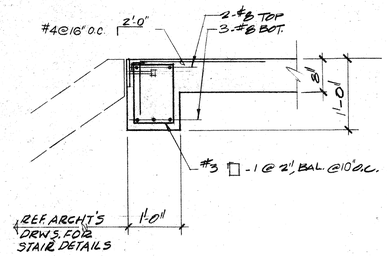

7

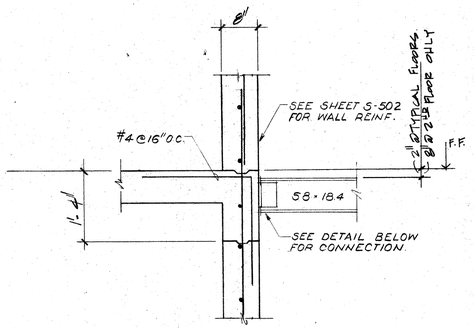

8

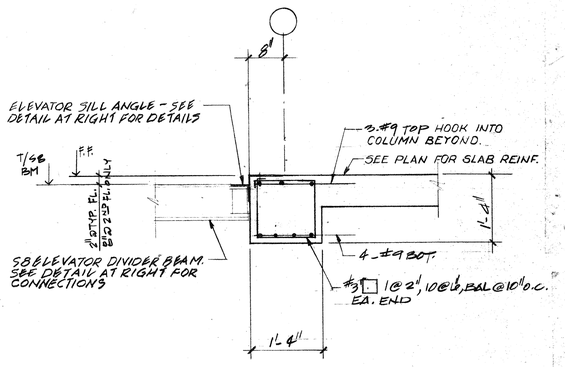

9

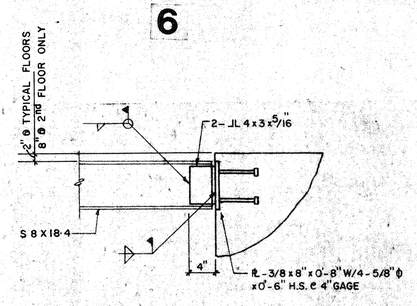

TYP. COND. AT GUIDERAIL BM. CONNX.

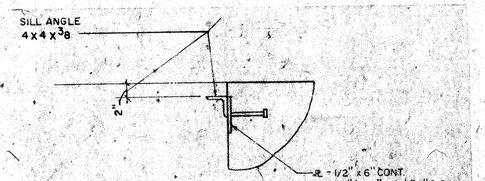

TYP. COND. AT ELEVATOR SILL

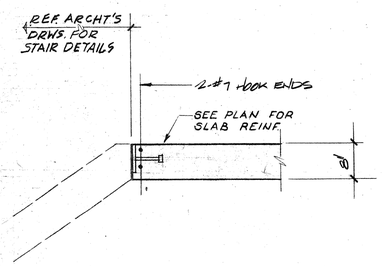

10

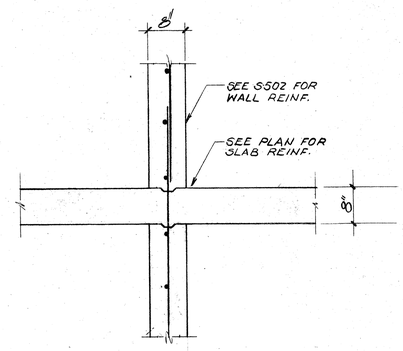

11

REVISED 2-3-83 G.B.

ISSUED FOR CONSTRUCTION 05.10.83

Intertech ENGINEERS INC.
13150 COIT ROAD SUITE 125 DALLAS TEXAS 75240
TELEPHONE 214) 699-8000 TELEX 73-0455

CAPITOL PLAZA HOTEL
FRANKFORT / KENTUCKY

STATE OF KENTUCKY BEN WILEY YOUNG 10492 REGISTERED PROFESSIONAL ENGINEER

JOHNSON / ROMANOWITZ / ARCHITECTS / LEXINGTON / KENTUCKY

DRAWN	PROJECT 8219
CHECKED	DATE 1-12-83

STRUCTURAL

SECTIONS AND DETAILS

DRAWING S-401

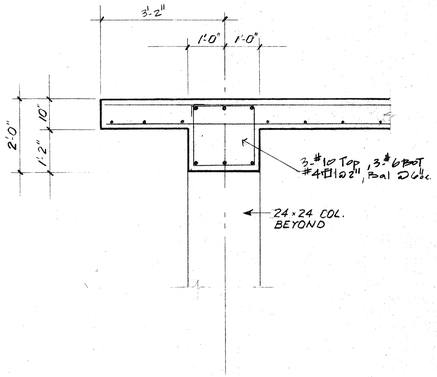

1

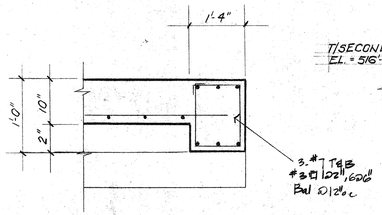

2

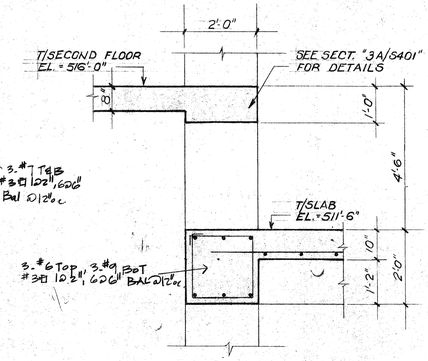

3

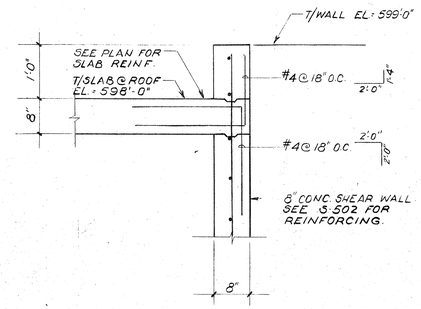

4

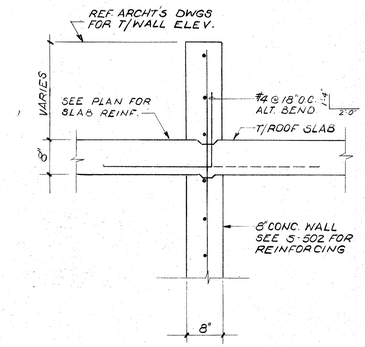

5

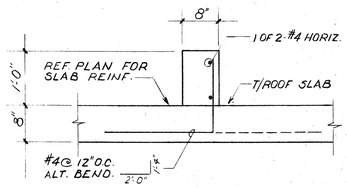

6

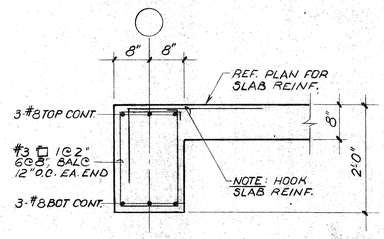

7

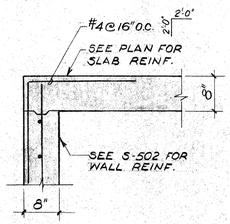

8

CAPITOL PLAZA HOTEL
FRANKFORT / KENTUCKY

JOHNSON / ROMANOWITZ / ARCHITECTS / LEXINGTON / KENTUCKY

DRAWN	PROJECT 82149
CHECKED	DATE 1-12-83

STRUCTURAL

SECTIONS AND DETAILS

DRAWING S-402

ISSUED FOR CONSTRUCTION 05.10.83

Intertech ENGINEERS INC
13150 COIT ROAD SUITE 125 DALLAS TEXAS 75240
TELEPHONE 214) 699-8000 TELEX 73-0455

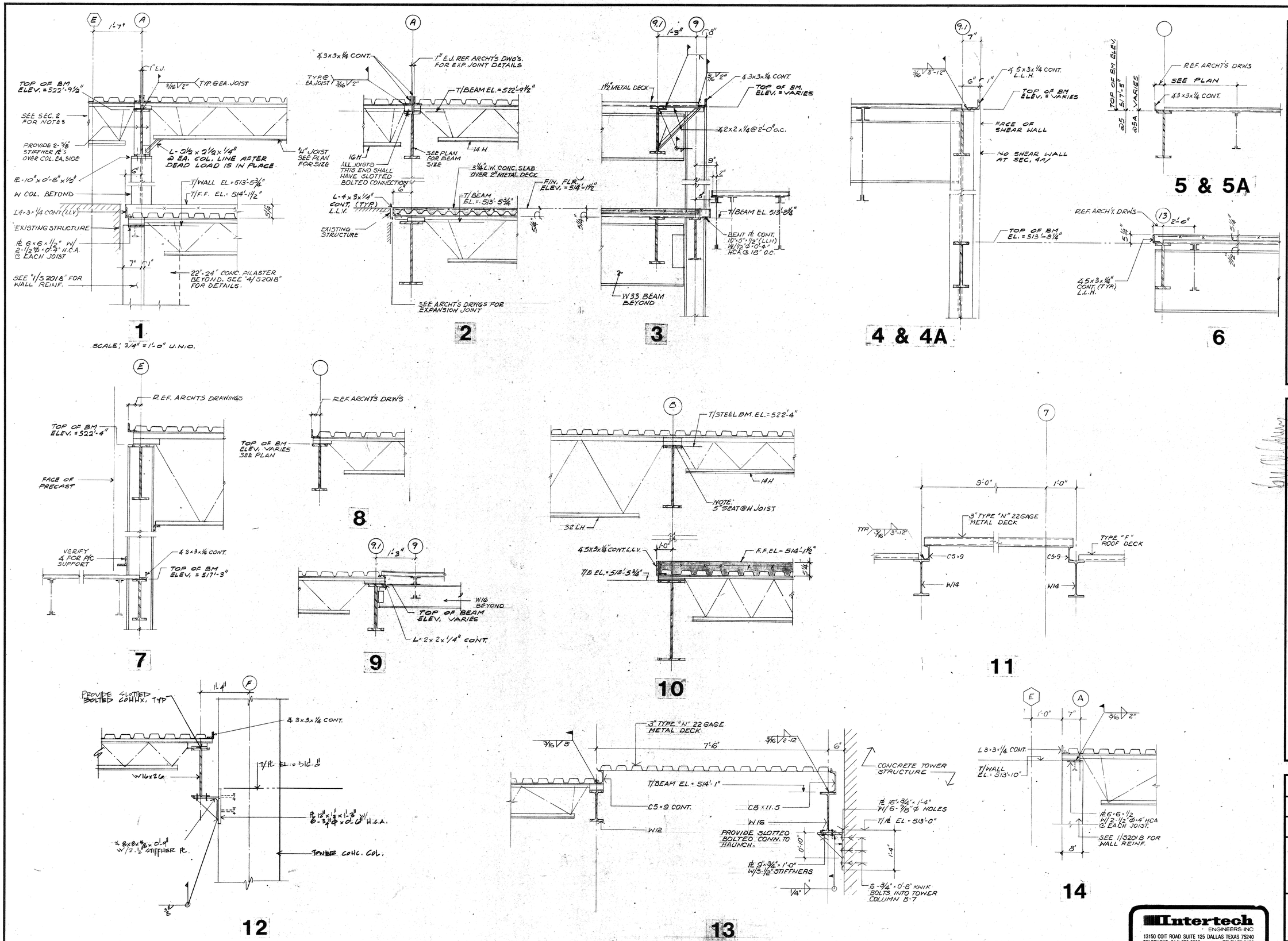

ISSUED FOR CONSTRUCTION 05.10.83

Intertech ENGINEERS INC
13150 COIT ROAD SUITE 125 DALLAS TEXAS 75240
TELEPHONE 214) 699-8000 TELEX 73-0455

CAPITOL PLAZA HOTEL
FRANKFORT / KENTUCKY

STATE OF KENTUCKY ★ BEN WILEY YOUNG 10492 REGISTERED PROFESSIONAL ENGINEER ★

© JOHNSON/ROMANOWITZ/ARCHITECTS/LEXINGTON/KENTUCKY
301 EAST VINE STREET, SUITE A TELEPHONE (606) 252-6781

DRAWN	PROJECT 82149
CHECKED	DATE 3.23.83

STRUCTURAL

SECTIONS AND DETAILS

DRAWING

S-403

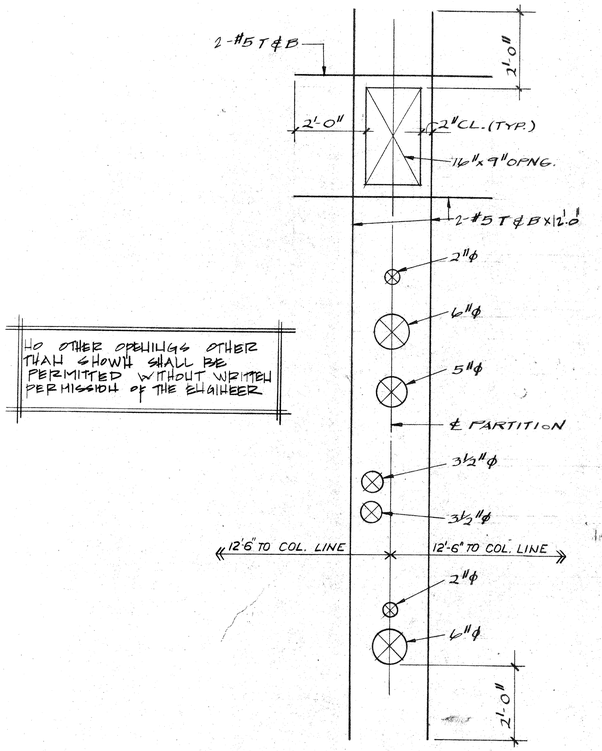

NO OTHER OPENINGS OTHER THAN SHOWN SHALL BE PERMITTED WITHOUT WRITTEN PERMISSION OF THE ENGINEER

TYPICAL MECH. OPENINGS AT WET WALLS

COORDINATE ALL OPENINGS WITH MECHANICAL DWGS

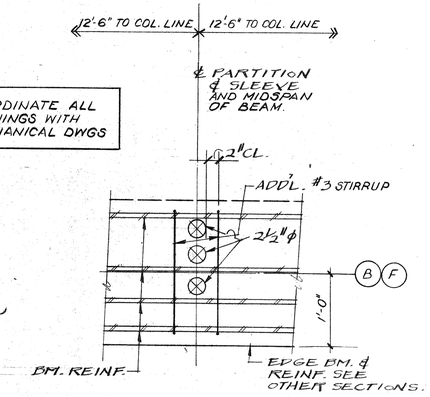

TYPICAL PIPE PENETRATIONS THRU BEAM ALONG LINES "B" & "F"

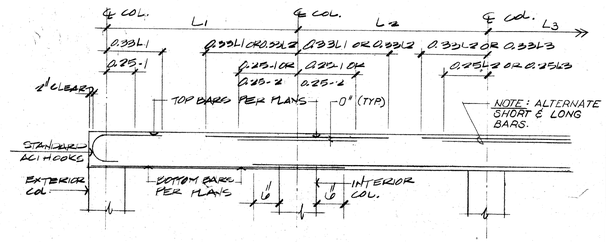

TYP. COL. STRIP AND END STRIP DETAIL

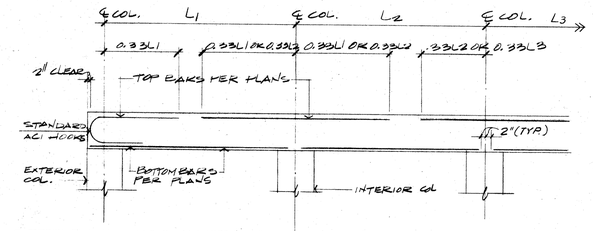

TYP. MIDDLE STRIP DETAIL

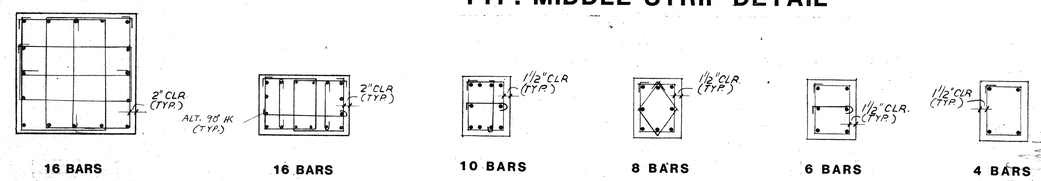

TYP. COL. BAR ARRANGEMENTS

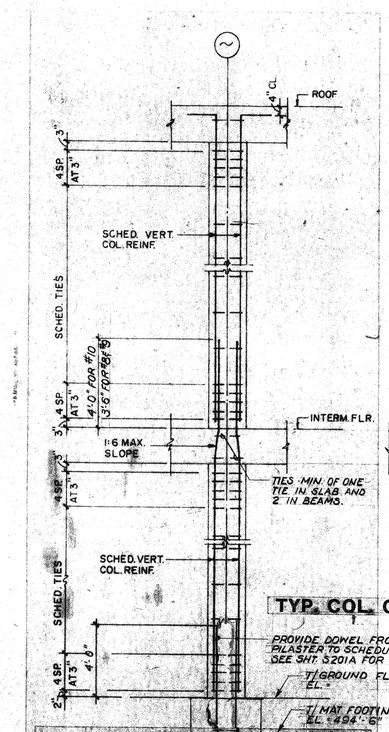

TYP. COL. OFFSET AT INTERIOR COLS.

TYPICAL COLUMN ELEVATION

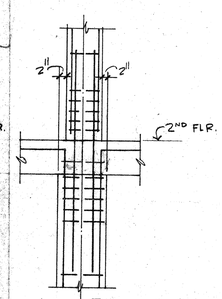

COLUMN SCHEDULE

LEVEL \ COLUMN MARK	C-5, C-6, D-2, D-5, D-6, D-7, D-8	B-3, B-4, B-5, B-6, F-2, F-3, F-4, F-5, F-6, F-7, F-8	B-1, B-9, C-1, C-9, D-1, D-9, F-1, F-9	B-2, B-8, C-2, C-8, C-3-7, B-7	C-3, C-4, D-3, D-4
PENTHOUSE				16"x24"	
ROOF EL. 598'-0"	16"x24"	16"x24"	16"x24"	4-#9	16"x24"
10TH EL. 588'-0"	4-#8	4-#9	4-#9	4-#9	4-#8
9TH EL. 578'-0"	4-#8	4-#9	4-#9	4-#9	4-#8
8TH EL. 568'-0"	4-#8	4-#9	4-#9	4-#9	4-#8
7TH EL. 559'-4"	8-#9	4-#9	4-#9	4-#9	8-#9
6TH EL. 550'-8"	8-#9	4-#9	4-#9	4-#9	8-#9
5TH EL. 542'-0"	8-#9	8-#9	6-#9	8-#9	8-#9
4TH EL. 533'-4"	10-#10	8-#9	6-#9	8-#9	10-#10
3RD EL. 524'-8"	10-#10	8-#9	6-#9	8-#9	10-#10
2ND EL. 516'-0"	10-#10	10-#10	6-#10	8-#9	10-#10
GROUND EL. = SEE PLAN	20"x24" 10-#10	16"x24" 10-#10	16"x24" 6-#10	16"x24" 10-#10	20"x24" 10-#10
T.O.F. EL. 494'-6"	20"x24" 48"x48" 18-#8	16"x24" 36"x24" 18-#8	16"x24" 36"x24" 18-#8	16"x24"	20"x24" 48"x48" 18-#8

#3 TIES @ 16" O.C.

ISSUED FOR CONSTRUCTION 05.10.83

Intertech ENGINEERS INC
13150 COIT ROAD SUITE 125 DALLAS TEXAS 75240
TELEPHONE 214) 699-8000 TELEX 73-0455

CAPITOL PLAZA HOTEL
FRANKFORT / KENTUCKY

STATE OF KENTUCKY BEN WILEY YOUNG 10492 REGISTERED PROFESSIONAL ENGINEER

JOHNSON / ROMANOWITZ / ARCHITECTS / LEXINGTON / KENTUCKY

DRAWN	PROJECT 82149
CHECKED	DATE 1-12-83

STRUCTURAL

SLAB REINF
COLUMN SCHEDULE
DETAILS

DRAWING S-501

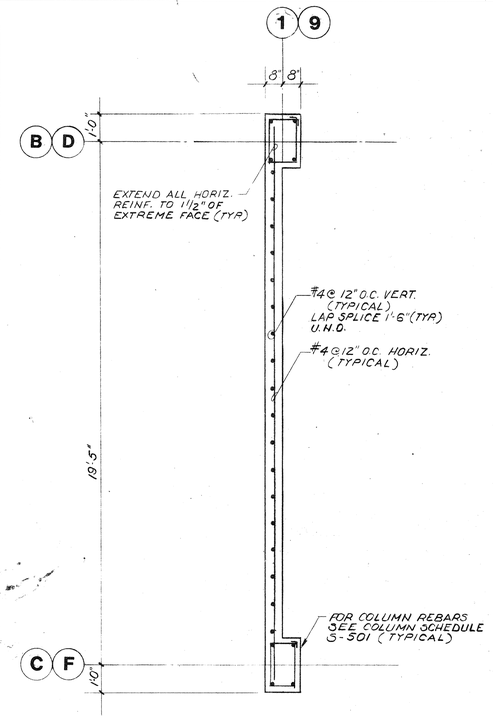

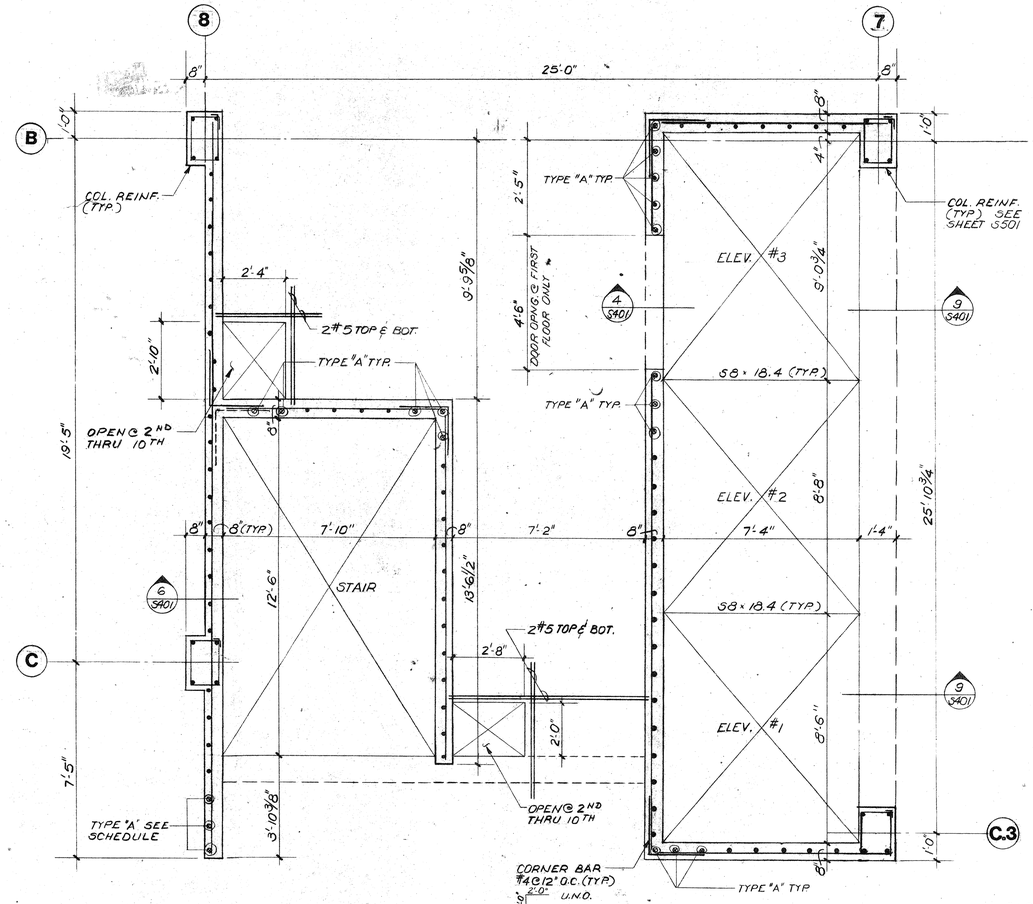

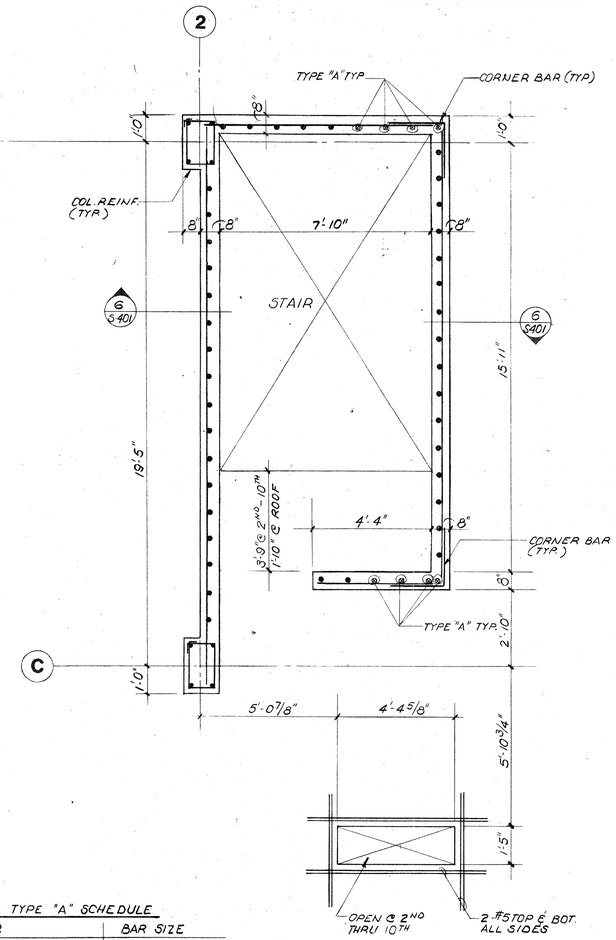

BAR TYPE "A" SCHEDULE

FLOOR	BAR SIZE
BASEMENT THRU 2ND	#8
3RD THRU 5TH	#7
6TH THRU ROOF	#6

ISSUED FOR CONSTRUCTION 05.10.83

Intertech ENGINEERS INC
13150 COIT ROAD SUITE 125 DALLAS TEXAS 75240
TELEPHONE (214) 699-8000 TELEX 73-0455

CAPITOL PLAZA HOTEL
FRANKFORT / KENTUCKY

STATE OF KENTUCKY * GEN WILEY YOUNG 10492 REGISTERED PROFESSIONAL ENGINEER

JOHNSON / ROMANOWITZ / ARCHITECTS / LEXINGTON / KENTUCKY

DRAWN	PROJECT 82149
CHECKED	DATE 12-30-82

STRUCTURAL

SHEAR WALL DETAILS

DRAWING S-502