2.8.148 FIN-800K-M -- Provider Reimbursement Report (KenPAC)

This report lists provider reimbursement amounts for the KenPAC payment cycle organized by category of service.

SORT ORDER BY: CD_COS_ST,

2.8.148.1 Technical Name

FIN-800K-M

2.8.148.2 Sort Order

Category of Service

2.8.148.3 Provider Reimbursement Report (KenPAC) Layout

```
Report   : FIN-800K-M                          COMMONWEALTH OF KENTUCKY                          Run Date: MM/DD/CCYY
Process  : FINJM80K                      MEDICAID MANAGEMENT INFORMATION SYSTEM                  Run Time:   99:99:99
Location: FINP8000                       PROVIDER REIMBURSEMENT REPORT (KENPAC)                      Page:       9999
                                                       MM/DD/CCYY
PAYMENT CYCLE:    9999
CATEGORY OF SERVICE (COS)        MEDICAID                    MCHIP                       SCHIP                       TOTAL
XX XXXXXXXXXXXXXXXXXXXX  CLAIM CNT    PAID AMOUNT   CLAIM CNT    PAID AMOUNT   CLAIM CNT    PAID AMOUNT   CLAIM CNT    PAID AMOUNT
XX      PAID            99,999,999  99,999,999.99  99,999,999  99,999,999.99  99,999,999  99,999,999.99  99,999,999  99,999,999.99
XX      DENIED          99,999,999  99,999,999.99  99,999,999  99,999,999.99  99,999,999  99,999,999.99  99,999,999  99,999,999.99
XX      ADJUSTED        99,999,999  99,999,999.99  99,999,999  99,999,999.99  99,999,999  99,999,999.99  99,999,999  99,999,999.99
XX      MASS ADJ        99,999,999  99,999,999.99  99,999,999  99,999,999.99  99,999,999  99,999,999.99  99,999,999  99,999,999.99
XX      TOTAL           99,999,999  99,999,999.99  99,999,999  99,999,999.99  99,999,999  99,999,999.99  99,999,999  99,999,999.99

XX XXXXXXXXXXXXXXXXXXXX  CLAIM CNT    PAID AMOUNT   CLAIM CNT    PAID AMOUNT   CLAIM CNT    PAID AMOUNT   CLAIM CNT    PAID AMOUNT
XX      PAID            99,999,999  99,999,999.99  99,999,999  99,999,999.99  99,999,999  99,999,999.99  99,999,999  99,999,999.99
XX      DENIED          99,999,999  99,999,999.99  99,999,999  99,999,999.99  99,999,999  99,999,999.99  99,999,999  99,999,999.99
XX      ADJUSTED        99,999,999  99,999,999.99  99,999,999  99,999,999.99  99,999,999  99,999,999.99  99,999,999  99,999,999.99
XX      MASS ADJ        99,999,999  99,999,999.99  99,999,999  99,999,999.99  99,999,999  99,999,999.99  99,999,999  99,999,999.99
XX      TOTAL           99,999,999  99,999,999.99  99,999,999  99,999,999.99  99,999,999  99,999,999.99  99,999,999  99,999,999.99

AL TOTAL ALL COS         CLAIM CNT    PAID AMOUNT   CLAIM CNT    PAID AMOUNT   CLAIM CNT    PAID AMOUNT   CLAIM CNT    PAID AMOUNT
XX      PAID            99,999,999  99,999,999.99  99,999,999  99,999,999.99  99,999,999  99,999,999.99  99,999,999  99,999,999.99
XX      DENIED          99,999,999  99,999,999.99  99,999,999  99,999,999.99  99,999,999  99,999,999.99  99,999,999  99,999,999.99
XX      ADJUSTED        99,999,999  99,999,999.99  99,999,999  99,999,999.99  99,999,999  99,999,999.99  99,999,999  99,999,999.99
XX      MASS ADJ        99,999,999  99,999,999.99  99,999,999  99,999,999.99  99,999,999  99,999,999.99  99,999,999  99,999,999.99
XX      TOTAL           99,999,999  99,999,999.99  99,999,999  99,999,999.99  99,999,999  99,999,999.99  99,999,999  99,999,999.99
                                                 ** E N D   O F   R E P O R T **
```

2.8.148.4 Field Descriptions

Field	Description	Length	Data Type	DB Table	DB Attributes
Adjusted MCHIP Claims	The count of adjusted MCHIP claims.	13	Number	N/A	Calculated Field
Adjusted MCHIP Paid	The paid amount of adjusted MCHIP claims.	13	Number	N/A	Calculated Field
Adjusted Medicaid Claims	The count of adjusted Medicaid claims.	13	Number	N/A	Calculated Field
Adjusted Medicaid Paid	The paid amount of adjusted Medicaid claims.	13	Number	N/A	Calculated Field
Adjusted SCHIP Claims	The count of adjusted SCHIP claims.	13	Number	N/A	Calculated Field
Adjusted SCHIP Paid	The paid amount of adjusted SCHIP claims.	13	Number	N/A	Calculated Field
Adjusted Total Claims	The total count of claims tied to the category of service.	13	Number	N/A	Calculated Field
Adjusted Total Paid	The total paid amount of the claims tied to the category of service	13	Number	N/A	Calculated Field
Category Of Service	The category of service code and description.	22	Character	T_FIN_COS	DSC_COS
Denied MCHIP Claims	The count of denied MCHIP claims.	13	Number	N/A	Calculated Field
Denied MCHIP Paid	The paid amount of denied MCHIP claims.	13	Number	N/A	Calculated Field
Denied Medicaid Claims	The count of denied Medicaid claims.	13	Number	N/A	Calculated Field
Denied Medicaid Paid	The paid amount of denied Medicaid claims.	13	Number	N/A	Calculated Field
Denied SCHIP Claims	The count of denied SCHIP claims.	13	Number	N/A	Calculated Field
Denied SCHIP Paid	The paid amount of denied SCHIP claims.	13	Number	N/A	Calculated Field

Denied Total Claims	The total count of claims tied to the category of service.	13	Number	N/A	Calculated Field
Denied Total Paid	The total paid amount of the claims tied to the category of service	13	Number	N/A	Calculated Field
Mass Adj MCHIP Claims	The count of mass adjusts MCHIP claims.	13	Number	N/A	Calculated Field
Mass Adj MCHIP Paid	The paid amount of mass adjusts MCHIP claims.	13	Number	N/A	Calculated Field
Mass Adj Medicaid Claims	The count of mass adjusts Medicaid claims.	13	Number	N/A	Calculated Field
Mass Adj Medicaid Paid	The paid amount of mass adjusts Medicaid claims.	13	Number	N/A	Calculated Field
Mass Adj SCHIP Claims	The count of mass adjusts SCHIP claims.	13	Number	N/A	Calculated Field
Mass Adj SCHIP Paid	The paid amount of mass adjusts SCHIP claims.	13	Number	N/A	Calculated Field
Mass Adj Total Claims	The total count of claims tied to the category of service.	13	Number	N/A	Calculated Field
Mass Adj Total Paid	The total paid amount of the claims tied to the category of service	13	Number	N/A	Calculated Field
Paid MCHIP Claims	The count of paid MCHIP claims.	13	Number	N/A	Calculated Field
Paid MCHIP Paid	The paid amount of paid MCHIP claims.	13	Number	N/A	Calculated Field
Paid Medicaid Claims	The count of paid Medicaid claims.	13	Number	N/A	Calculated Field
Paid Medicaid Paid	The paid amount of paid Medicaid claims.	13	Number	N/A	Calculated Field
Paid SCHIP Claims	The count of paid SCHIP claims.	13	Number	N/A	Calculated Field
Paid SCHIP Paid	The paid amount of paid SCHIP claims.	13	Number	N/A	Calculated Field

Paid Total Claims	The total count of claims tied to the category of service.	13	Number	N/A	Calculated Field
Paid Total Paid	The total paid amount of the claims tied to the category of service	13	Number	N/A	Calculated Field
Payment Cycle	The payment cycle number.	4	Number	N/A	N/A
Total MCHIP Claims	The count of all paid MCHIP claims for the category of service.	13	Number	N/A	Calculated Field
Total MCHIP Paid	The paid amount of all paid MCHIP claims for the category of service.	13	Number	N/A	Calculated Field
Total Medicaid Claims	The count of all Medicaid claims for the category of service.	13	Number	N/A	Calculated Field
Total Medicaid Paid	The paid amount of all paid Medicaid claims for the category of service.	13	Number	N/A	Calculated Field
Total SCHIP Claims	The count of all paid SCHIP claims for the category of service.	13	Number	N/A	Calculated Field
Total SCHIP Paid	The paid amount of all paid SCHIP claims for the category of service.	13	Number	N/A	Calculated Field
Total Claims	The total count of all claims tied to the category of service.	13	Number	N/A	Calculated Field
Total Paid	The total paid amount of all the claims tied to the category of service	13	Number	N/A	Calculated Field

2.8.148.5 Associated Programs

Program	Description
finp8000	Provider Reimbursement Report

2.8.148.6 Associated Requirements

ID
No associated Requirements found.

2.8.148.7 Change Orders

ID	Name	Description
No associated Change Orders found.		

2.8.149 FIN-800L-M -- Provider Reimbursement Report (Lockin)

This report lists provider reimbursement amounts for the Lockin payment cycle organized by category of service.

2.8.149.1 Technical Name

FIN-800L-M

2.8.149.2 Sort Order

Category of Service

2.8.149.3 Provider Reimbursement Report (Lockin) Layout

```
Report  : FIN-800L-M                    COMMONWEALTH OF KENTUCKY                    Run Date: MM/DD/CCYY
Process : FINJM80L                 MEDICAID MANAGEMENT INFORMATION SYSTEM          Run Time:   99:99:99
Location: FINP8000                 PROVIDER REIMBURSEMENT REPORT (LOCKIN)              Page:       9999
                                                  MM/DD/CCYY
PAYMENT CYCLE:    9999
CATEGORY OF SERVICE (COS)        MEDICAID                    MCHIP                       SCHIP                       TOTAL
XX XXXXXXXXXXXXXXXXXXX  CLAIM CNT    PAID AMOUNT   CLAIM CNT    PAID AMOUNT   CLAIM CNT    PAID AMOUNT   CLAIM CNT    PAID AMOUNT
XX      PAID            99,999,999  99,999,999.99  99,999,999  99,999,999.99  99,999,999  99,999,999.99  99,999,999  99,999,999.99
XX      DENIED          99,999,999  99,999,999.99  99,999,999  99,999,999.99  99,999,999  99,999,999.99  99,999,999  99,999,999.99
XX      ADJUSTED        99,999,999  99,999,999.99  99,999,999  99,999,999.99  99,999,999  99,999,999.99  99,999,999  99,999,999.99
XX      MASS ADJ        99,999,999  99,999,999.99  99,999,999  99,999,999.99  99,999,999  99,999,999.99  99,999,999  99,999,999.99
XX      TOTAL           99,999,999  99,999,999.99  99,999,999  99,999,999.99  99,999,999  99,999,999.99  99,999,999  99,999,999.99

XX XXXXXXXXXXXXXXXXXXX  CLAIM CNT    PAID AMOUNT   CLAIM CNT    PAID AMOUNT   CLAIM CNT    PAID AMOUNT   CLAIM CNT    PAID AMOUNT
XX      PAID            99,999,999  99,999,999.99  99,999,999  99,999,999.99  99,999,999  99,999,999.99  99,999,999  99,999,999.99
XX      DENIED          99,999,999  99,999,999.99  99,999,999  99,999,999.99  99,999,999  99,999,999.99  99,999,999  99,999,999.99
XX      ADJUSTED        99,999,999  99,999,999.99  99,999,999  99,999,999.99  99,999,999  99,999,999.99  99,999,999  99,999,999.99
XX      MASS ADJ        99,999,999  99,999,999.99  99,999,999  99,999,999.99  99,999,999  99,999,999.99  99,999,999  99,999,999.99
XX      TOTAL           99,999,999  99,999,999.99  99,999,999  99,999,999.99  99,999,999  99,999,999.99  99,999,999  99,999,999.99

AL TOTAL ALL COS         CLAIM CNT    PAID AMOUNT   CLAIM CNT    PAID AMOUNT   CLAIM CNT    PAID AMOUNT   CLAIM CNT    PAID AMOUNT
XX      PAID            99,999,999  99,999,999.99  99,999,999  99,999,999.99  99,999,999  99,999,999.99  99,999,999  99,999,999.99
XX      DENIED          99,999,999  99,999,999.99  99,999,999  99,999,999.99  99,999,999  99,999,999.99  99,999,999  99,999,999.99
XX      ADJUSTED        99,999,999  99,999,999.99  99,999,999  99,999,999.99  99,999,999  99,999,999.99  99,999,999  99,999,999.99
XX      MASS ADJ        99,999,999  99,999,999.99  99,999,999  99,999,999.99  99,999,999  99,999,999.99  99,999,999  99,999,999.99
XX      TOTAL           99,999,999  99,999,999.99  99,999,999  99,999,999.99  99,999,999  99,999,999.99  99,999,999  99,999,999.99
                                          ** E N D   O F   R E P O R T **
```

2.8.149.4 Field Descriptions

Field	Description	Length	Data Type	DB Table	DB Attributes
Adjusted MCHIP Claims	The count of adjusted MCHIP claims.	13	Number	N/A	Calculated Field
Adjusted MCHIP Paid	The paid amount of adjusted MCHIP claims.	13	Number	N/A	Calculated Field
Adjusted Medicaid Claims	The count of adjusted Medicaid claims.	13	Number	N/A	Calculated Field
Adjusted Medicaid Paid	The paid amount of adjusted Medicaid claims.	13	Number	N/A	Calculated Field
Adjusted SCHIP Claims	The count of adjusted SCHIP claims.	13	Number	N/A	Calculated Field
Adjusted SCHIP Paid	The paid amount of adjusted SCHIP claims.	13	Number	N/A	Calculated Field
Adjusted Total Claims	The total count of claims tied to the category of service.	13	Number	N/A	Calculated Field
Adjusted Total Paid	The total paid amount of the claims tied to the category of service	13	Number	N/A	Calculated Field
Category Of Service	The category of service code and description.	22	Character	T_FIN_COS	DSC_COS
Denied MCHIP Claims	The count of denied MCHIP claims.	13	Number	N/A	Calculated Field
Denied MCHIP Paid	The paid amount of denied MCHIP claims.	13	Number	N/A	Calculated Field
Denied Medicaid Claims	The count of denied Medicaid claims.	13	Number	N/A	Calculated Field
Denied Medicaid Paid	The paid amount of denied Medicaid claims.	13	Number	N/A	Calculated Field
Denied SCHIP Claims	The count of denied SCHIP claims.	13	Number	N/A	Calculated Field
Denied SCHIP Paid	The paid amount of denied SCHIP claims.	13	Number	N/A	Calculated Field

Denied Total Claims	The total count of claims tied to the category of service.	13	Number	N/A	Calculated Field
Denied Total Paid	The total paid amount of the claims tied to the category of service	13	Number	N/A	Calculated Field
Mass Adj MCHIP Claims	The count of mass adjusts MCHIP claims.	13	Number	N/A	Calculated Field
Mass Adj MCHIP Paid	The paid amount of mass adjusts MCHIP claims.	13	Number	N/A	Calculated Field
Mass Adj Medicaid Claims	The count of mass adjusts Medicaid claims.	13	Number	N/A	Calculated Field
Mass Adj Medicaid Paid	The paid amount of mass adjusts Medicaid claims.	13	Number	N/A	Calculated Field
Mass Adj SCHIP Claims	The count of mass adjusts SCHIP claims.	13	Number	N/A	Calculated Field
Mass Adj SCHIP Paid	The paid amount of mass adjusts SCHIP claims.	13	Number	N/A	Calculated Field
Mass Adj Total Claims	The total count of claims tied to the category of service.	13	Number	N/A	Calculated Field
Mass Adj Total Paid	The total paid amount of the claims tied to the category of service	13	Number	N/A	Calculated Field
Paid MCHIP Claims	The count of paid MCHIP claims.	13	Number	N/A	Calculated Field
Paid MCHIP Paid	The paid amount of paid MCHIP claims.	13	Number	N/A	Calculated Field
Paid Medicaid Claims	The count of paid Medicaid claims.	13	Number	N/A	Calculated Field
Paid Medicaid Paid	The paid amount of paid Medicaid claims.	13	Number	N/A	Calculated Field
Paid SCHIP Claims	The count of paid SCHIP claims.	13	Number	N/A	Calculated Field
Paid SCHIP Paid	The paid amount of paid SCHIP claims.	13	Number	N/A	Calculated Field

Paid Total Claims	The total count of claims tied to the category of service.	13	Number	N/A	Calculated Field
Paid Total Paid	The total paid amount of the claims tied to the category of service	13	Number	N/A	Calculated Field
Payment Cycle	The payment cycle number.	4	Number	N/A	N/A
Total MCHIP Claims	The count of all paid MCHIP claims for the category of service.	13	Number	N/A	Calculated Field
Total MCHIP Paid	The paid amount of all paid MCHIP claims for the category of service.	13	Number	N/A	Calculated Field
Total Medicaid Claims	The count of all Medicaid claims for the category of service.	13	Number	N/A	Calculated Field
Total Medicaid Paid	The paid amount of all paid Medicaid claims for the category of service.	13	Number	N/A	Calculated Field
Total SCHIP Claims	The count of all paid SCHIP claims for the category of service.	13	Number	N/A	Calculated Field
Total SCHIP Paid	The paid amount of all paid SCHIP claims for the category of service.	13	Number	N/A	Calculated Field
Total Claims	The total count of all claims tied to the category of service.	13	Number	N/A	Calculated Field
Total Paid	The total paid amount of all the claims tied to the category of service	13	Number	N/A	Calculated Field

2.8.149.5 Associated Programs

Program	Description
finp8000	Provider Reimbursement Report

2.8.149.6 Associated Requirements

ID
No associated Requirements found.

2.8.149.7 Change Orders

ID	Name	Description
No associated Change Orders found.		

2.8.150 FIN-800Q-Q -- Provider Reimbursement Report (Quarterly)

This report lists provider reimbursement amounts for the Quarterly cycle organized by category of service.

2.8.150.1 Technical Name

FIN-800Q-Q

2.8.150.2 Sort Order

Category of Service

2.8.150.3 Provider Reimbursement Report (Quarterly) Layout

```
Report  : FIN-800Q-Q                          COMMONWEALTH OF KENTUCKY                          Run Date: MM/DD/CCYY
Process : FINJM80Q                     MEDICAID MANAGEMENT INFORMATION SYSTEM                   Run Time:   99:99:99
Location: FINP8000                    PROVIDER REIMBURSEMENT REPORT (QUARTERLY)                     Page:       9999
                                                        MM/DD/CCYY
PAYMENT CYCLE:    9999
CATEGORY OF SERVICE (COS)        MEDICAID                    MCHIP                       SCHIP                       TOTAL
XX XXXXXXXXXXXXXXXXXXXX  CLAIM CNT    PAID AMOUNT   CLAIM CNT    PAID AMOUNT   CLAIM CNT    PAID AMOUNT   CLAIM CNT    PAID AMOUNT
XX      PAID            99,999,999 999,999,999.99  99,999,999 999,999,999.99  99,999,999 999,999,999.99  99,999,999 999,999,999.99
XX      DENIED          99,999,999 999,999,999.99  99,999,999 999,999,999.99  99,999,999 999,999,999.99  99,999,999 999,999,999.99
XX      ADJUSTED        99,999,999 999,999,999.99  99,999,999 999,999,999.99  99,999,999 999,999,999.99  99,999,999 999,999,999.99
XX      MASS ADJ        99,999,999 999,999,999.99  99,999,999 999,999,999.99  99,999,999 999,999,999.99  99,999,999 999,999,999.99
XX      TOTAL           99,999,999 999,999,999.99  99,999,999 999,999,999.99  99,999,999 999,999,999.99  99,999,999 999,999,999.99

XX XXXXXXXXXXXXXXXXXXXX  CLAIM CNT    PAID AMOUNT   CLAIM CNT    PAID AMOUNT   CLAIM CNT    PAID AMOUNT   CLAIM CNT    PAID AMOUNT
XX      PAID            99,999,999 999,999,999.99  99,999,999 999,999,999.99  99,999,999 999,999,999.99  99,999,999 999,999,999.99
XX      DENIED          99,999,999 999,999,999.99  99,999,999 999,999,999.99  99,999,999 999,999,999.99  99,999,999 999,999,999.99
XX      ADJUSTED        99,999,999 999,999,999.99  99,999,999 999,999,999.99  99,999,999 999,999,999.99  99,999,999 999,999,999.99
XX      MASS ADJ        99,999,999 999,999,999.99  99,999,999 999,999,999.99  99,999,999 999,999,999.99  99,999,999 999,999,999.99
XX      TOTAL           99,999,999 999,999,999.99  99,999,999 999,999,999.99  99,999,999 999,999,999.99  99,999,999 999,999,999.99

AL TOTAL ALL COS         CLAIM CNT    PAID AMOUNT   CLAIM CNT    PAID AMOUNT   CLAIM CNT    PAID AMOUNT   CLAIM CNT    PAID AMOUNT
XX      PAID            99,999,999 999,999,999.99  99,999,999 999,999,999.99  99,999,999 999,999,999.99  99,999,999 999,999,999.99
XX      DENIED          99,999,999 999,999,999.99  99,999,999 999,999,999.99  99,999,999 999,999,999.99  99,999,999 999,999,999.99
XX      ADJUSTED        99,999,999 999,999,999.99  99,999,999 999,999,999.99  99,999,999 999,999,999.99  99,999,999 999,999,999.99
XX      MASS ADJ        99,999,999 999,999,999.99  99,999,999 999,999,999.99  99,999,999 999,999,999.99  99,999,999 999,999,999.99
XX      TOTAL           99,999,999 999,999,999.99  99,999,999 999,999,999.99  99,999,999 999,999,999.99  99,999,999 999,999,999.99

                                        ** E N D   O F   R E P O R T **
```

2.8.150.4 Field Descriptions

Field	Description	Length	Data Type	DB Table	DB Attributes
Adjusted MCHIP Claims	The count of adjusted MCHIP claims.	14	Number	N/A	Calculated Field
Adjusted MCHIP Paid	The paid amount of adjusted MCHIP claims.	14	Number	N/A	Calculated Field
Adjusted Medicaid Claims	The count of adjusted Medicaid claims.	14	Number	N/A	Calculated Field
Adjusted Medicaid Paid	The paid amount of adjusted Medicaid claims.	14	Number	N/A	Calculated Field
Adjusted SCHIP Claims	The count of adjusted SCHIP claims.	13	Number	N/A	Calculated Field
Adjusted SCHIP Paid	The paid amount of adjusted SCHIP claims.	14	Number	N/A	Calculated Field
Adjusted Total Claims	The total count of claims tied to the category of service.	13	Number	N/A	Calculated Field
Adjusted Total Paid	The total paid amount of the claims tied to the category of service	14	Number	N/A	Calculated Field
Category Of Service	The category of service code and description.	22	Character	T_FIN_COS	DSC_COS
Denied MCHIP Claims	The count of denied MCHIP claims.	13	Number	N/A	Calculated Field
Denied MCHIP Paid	The paid amount of denied MCHIP claims.	14	Number	N/A	Calculated Field
Denied Medicaid Claims	The count of denied Medicaid claims.	13	Number	N/A	Calculated Field
Denied Medicaid Paid	The paid amount of denied Medicaid claims.	14	Number	N/A	Calculated Field
Denied SCHIP Claims	The count of denied SCHIP claims.	13	Number	N/A	Calculated Field
Denied SCHIP Paid	The paid amount of denied SCHIP claims.	14	Number	N/A	Calculated Field

Denied Total Claims	The total count of claims tied to the category of service.	13	Number	N/A	Calculated Field
Denied Total Paid	The total paid amount of the claims tied to the category of service	14	Number	N/A	Calculated Field
Mass Adj MCHIP Claims	The count of mass adjusts MCHIP claims.	13	Number	N/A	Calculated Field
Mass Adj MCHIP Paid	The paid amount of mass adjusts MCHIP claims.	14	Number	N/A	Calculated Field
Mass Adj Medicaid Claims	The count of mass adjusts Medicaid claims.	13	Number	N/A	Calculated Field
Mass Adj Medicaid Paid	The paid amount of mass adjusts Medicaid claims.	14	Number	N/A	Calculated Field
Mass Adj SCHIP Claims	The count of mass adjusts SCHIP claims.	13	Number	N/A	Calculated Field
Mass Adj SCHIP Paid	The paid amount of mass adjusts SCHIP claims.	14	Number	N/A	Calculated Field
Mass Adj Total Claims	The total count of claims tied to the category of service.	13	Number	N/A	Calculated Field
Mass Adj Total Paid	The total paid amount of the claims tied to the category of service	13	Number	N/A	Calculated Field
Paid MCHIP Claims	The count of paid MCHIP claims.	13	Number	N/A	Calculated Field
Paid MCHIP Paid	The paid amount of paid MCHIP claims.	14	Number	N/A	Calculated Field
Paid Medicaid Claims	The count of paid Medicaid claims.	13	Number	N/A	Calculated Field
Paid Medicaid Paid	The paid amount of paid Medicaid claims.	14	Number	N/A	Calculated Field
Paid SCHIP Claims	The count of paid SCHIP claims.	13	Number	N/A	Calculated Field
Paid SCHIP Paid	The paid amount of paid SCHIP claims.	14	Number	N/A	Calculated Field

Paid Total Claims	The total count of claims tied to the category of service.	13	Number	N/A	Calculated Field
Paid Total Paid	The total paid amount of the claims tied to the category of service	14	Number	N/A	Calculated Field
Payment Cycle	The payment cycle identifier.	7	Character	N/A	N/A
Total MCHIP Claims	The count of all paid MCHIP claims for the category of service.	13	Number	N/A	Calculated Field
Total MCHIP Paid	The paid amount of all paid MCHIP claims for the category of service.	14	Number	N/A	Calculated Field
Total Medicaid Claims	The count of all Medicaid claims for the category of service.	13	Number	N/A	Calculated Field
Total Medicaid Paid	The paid amount of all paid Medicaid claims for the category of service.	14	Number	N/A	Calculated Field
Total SCHIP Claims	The count of all paid SCHIP claims for the category of service.	13	Number	N/A	Calculated Field
Total SCHIP Paid	The paid amount of all paid SCHIP claims for the category of service.	14	Number	N/A	Calculated Field
Total Claims	The total count of all claims tied to the category of service.	13	Number	N/A	Calculated Field
Total Paid	The total paid amount of all the claims tied to the category of service	14	Number	N/A	Calculated Field

2.8.150.5 Associated Programs

Program	Description
finp8000	Provider Reimbursement Report

2.8.150.6 Associated Requirements

ID
30.050.009.002.16

2.8.150.7 Change Orders

ID	Name	Description
8843	FIN800Q & FIN805*Q ERRORS	From: Bechtel, Steve (CHFS DMS) [mailto:Steve.Bechtel@ky.gov] Sent: Monday, July 23, 2007 3:49 PM To: KY_MMIS_Action_Item_Track@eds.com Cc: Conway, Paula J; Bullock, Tammy (CHFS DMS); Keffer, Cassie (CHFS DMS) Subject: FINANCIAL - FIN-8055-Q is not correct Importance: High The quarterly shows Refund Amount for COS 99 as $6,438,063.75 when the month of June shows $1,961,315.08 and April and May show $0.00.There should not be anything showing under COS 99 on either the monthly or Quarterly Reports None of the FIN8000W, FIN8050W or FIN8055W BALANCED FOR THE QUARTER OF JUNE 2007. IN ADDITION, WE NEED TO REMOVE COS 99 FROM REPORTING ON THE FIN8055Q Issue Tracking # 911

2.8.151 FIN-8010-W -- Provider Reimbursement Report - KenPAC

This report lists provider reimbursement amounts for the KenPAC payments organized by category of service. This report will only report counts from claims with a Category of Service equal to 00, 41, 43, 74, 75 and 99.

2.8.151.1 Technical Name

FIN-8010-W

2.8.151.2 Sort Order

Category of Service

For readability, the report layout displays on the next page.

2.8.151.3 Provider Reimbursement Report - KenPAC Layout

```
Report  : FIN-8010-W                    COMMONWEALTH OF KENTUCKY                    Run Date: MM/DD/CCYY
Process : FINJW800                  MEDICAID MANAGEMENT INFORMATION SYSTEM          Run Time:   99:99:99
Location: FINP8010                  PROVIDER REIMBURSEMENT REPORT (KENPAC)              Page:       9999
                                                  MM/DD/CCYY

PAYMENT CYCLE:    9999
CATEGORY OF SERVICE (COS)        MCHIP                SCHIP                MEDICAID                PAID
XX XXXXXXXXXXXXXXXXXXXX
XX      PAID                 99,999,999.99        99,999,999.99        99,999,999.99        99,999,999.99
XX      DENIED               99,999,999.99        99,999,999.99        99,999,999.99        99,999,999.99
XX      ADJUSTED             99,999,999.99        99,999,999.99        99,999,999.99        99,999,999.99
XX      MASS ADJ             99,999,999.99        99,999,999.99        99,999,999.99        99,999,999.99
XX      TOTAL                99,999,999.99        99,999,999.99        99,999,999.99        99,999,999.99

XX XXXXXXXXXXXXXXXXXXXX
XX      PAID                 99,999,999.99        99,999,999.99        99,999,999.99        99,999,999.99
XX      DENIED               99,999,999.99        99,999,999.99        99,999,999.99        99,999,999.99
XX      ADJUSTED             99,999,999.99        99,999,999.99        99,999,999.99        99,999,999.99
XX      MASS ADJ             99,999,999.99        99,999,999.99        99,999,999.99        99,999,999.99
XX      TOTAL                99,999,999.99        99,999,999.99        99,999,999.99        99,999,999.99

AL TOTAL ALL COS
XX      PAID                 99,999,999.99        99,999,999.99        99,999,999.99        99,999,999.99
XX      DENIED               99,999,999.99        99,999,999.99        99,999,999.99        99,999,999.99
XX      ADJUSTED             99,999,999.99        99,999,999.99        99,999,999.99        99,999,999.99
XX      MASS ADJ             99,999,999.99        99,999,999.99        99,999,999.99        99,999,999.99
XX      TOTAL                99,999,999.99        99,999,999.99        99,999,999.99        99,999,999.99

                                        ** E N D   O F   R E P O R T **
```

2.8.151.4 Field Descriptions

Field	Description	Length	Data Type	DB Table	DB Attributes
Adjusted MCHIP	The paid amount of adjusted MCHIP claims.	13	Number	N/A	Calculated Field
Adjusted Medicaid	The paid amount of adjusted Medicaid claims.	13	Number	N/A	Calculated Field
Adjusted Paid	The total paid amount of the claims tied to the category of service	13	Number	N/A	Calculated Field

Adjusted SCHIP	The paid amount of adjusted SCHIP claims.	13	Number	N/A	Calculated Field
Category Of Service	The category of service code and description.	22	Character	T_FIN_COS	DSC_COS
Denied MCHIP	The paid amount of denied MCHIP claims.	13	Number	N/A	Calculated Field
Denied Medicaid	The paid amount of denied Medicaid claims.	13	Number	N/A	Calculated Field
Denied Paid	The total paid amount of the claims tied to the category of service	13	Number	N/A	Calculated Field
Denied SCHIP	The paid amount of denied SCHIP claims.	13	Number	N/A	Calculated Field
Mass Adj MCHIP	The paid amount of mass adjusts MCHIP claims.	13	Number	N/A	Calculated Field
Mass Adj Medicaid	The paid amount of mass adjusts Medicaid claims.	13	Number	N/A	Calculated Field
Mass Adj Paid	The total paid amount of the claims tied to the category of service	13	Number	N/A	Calculated Field
Mass Adj SCHIP	The paid amount of mass adjusts SCHIP claims.	13	Number	N/A	Calculated Field
Paid MCHIP Paid	The paid amount of paid MCHIP claims.	13	Number	N/A	Calculated Field
Paid Medicaid	The paid amount of paid Medicaid claims.	13	Number	N/A	Calculated Field
Paid	The total paid amount of the claims tied to the category of service	13	Number	N/A	Calculated Field
Paid SCHIP Paid	The paid amount of paid SCHIP claims.	13	Number	N/A	Calculated Field
Payment Cycle	The payment cycle number.	4	Number	N/A	N/A
Total	The total paid amount of all the claims tied to the category	13	Number	N/A	Calculated Field

	of service				
Total MCHIP	The paid amount of all paid MCHIP claims for the category of service.	13	Number	N/A	Calculated Field
Total Medicaid	The paid amount of all paid Medicaid claims for the category of service.	13	Number	N/A	Calculated Field
Total SCHIP	The paid amount of all paid SCHIP claims for the category of service.	13	Number	N/A	Calculated Field

2.8.151.5 Associated Programs

Program	Description
finp8010	Provider Reimbursement Report KenPAC

2.8.151.6 Associated Requirements

ID
No associated Requirements found.

2.8.151.7 Change Orders

ID	Name	Description
No associated Change Orders found.		

2.8.152 FIN-8011-W -- Warrant Tape Transmittal

Cover information regarding the warrant tape produced for delivery to DMS. The cover letter is generated for warrant tapes which are produced as a result of the weekly payment cycle, non-provider checks, and on-demand checks. The letter includes the beginning and ending check numbers, the number of checks, the total warrant amount, and the payment date.

2.8.152.1 Technical Name

FIN-8011-W

2.8.152.2 Sort Order

N/A

2.8.152.3 Warrant Tape Transmittal Layout

```
COMMONWEALTH OF KENTUCKY WARRANT TAPE TRANSMITTAL
          FROM: COMMONWEALTH OF KENTUCKY
                656 Chamberlin
                FRANKFORT, KY 40601
          TO:   {MEMEBER NAME}
                ATTN: {NAME}
          *******************************************************
          *                                                     *
          * __  WEEKLY WARRANT TAPE:     CYCLE NO: __ WEEK NO: __ *
          *                                                     *
          * __  NON-PROVIDER CHECK TAPE: RUN NO: __             *
          *                                                     *
          * __   ON-DEMAND CHECK TAPE:  DAILY CYCLE DATE: _______ *
          *                                                     *
          *******************************************************
          CYCLE:   XXXXXXXXXXXXXXXXXXXX
          BEGINNING CHECK NUMBER:          0000000
          ENDING CHECK NUMBER:             9999999
          NUMBER OF CHECKS:                  7,183
          TOTAL WARRANT AMOUNT:     $40,250,502.07
          PAYMENT DATE:                 99/99/9999
          CONTACT COMMONWEALTH OF KENTUCKY COMPUTER OPERATIONS AT 999-999-9999 FOR
          ANY QUESTIONS CONCERNING THE TAPE.
          ON DEMAND & WEEKLY = RECORD SIZE = 132, FB, BLOCK SIZE =
          23,364
          NON-PROVIDER = RECORD SIZE = 138, FB, BLOCK SIZE = 27,876
          COMMONWEALTH OF KENTUCKY SERVER FILE NAME ______________________________
          RECEIVED BY: ___________________________  DATE: _________
```

2.8.152.4 Field Descriptions

Field	Description	Length	Data Type	DB Table	DB Attributes
Beginning Check Number	The beginning check number of for this payment cycle.	7	Number	CHECK_NUM	T_CHECK
CYCLE	This is the name of the financial schedule that was used to create the warrant information.	20	Character	T_FIN_SCHEDULE	SCHED_TITLE
Ending Check Number	The last check number used in the payment cycle	7	Number	N/A	Calculated Field
Number of Checks	The total number of checks created in this cycle.	9	Number	N/A	Calculated Field
Payment Date	The payment date.	10	Date (CCYY/MM/DD)	N/A	N/A
Total Warrant Amount	The total amount of all the checks.	13	Number	N/A	Calculated Field

2.8.152.5 Associated Programs

Program	Description
No associated Programs found.	

2.8.152.6 Associated Requirements

ID
30.090.009.003.1

2.8.152.7 Change Orders

ID	Name	Description
1140	Create FIN-8011-W warrant trns	Create the legacy KYMC8001-R001 Warrant Tape Transmittal report
4651	Financial Letters	Financial letters are produced out of MMIS but are not making it to OnBase.
5855	FIN-8011-W not producing data	When viewing the 1/11/2007 cycle, the FIN-8011-W still does not have data from the cycle. DEF 4651 Status = UAT implemented as of 12/7/06.
8637	Rpts reproducing from on demand	The reports below were created again when the On Demand cycle ran. They should not. FIN-801K-M for 6/28/07 FIN-6900-W for 7/1/07 FIN-8011-W for 7/1/07 FIN-8000-w for 7/1/2007 FIN-8050-W for 7/1/07 FIN-8055-W for 7/1/07

2.8.153 FIN-801K-M -- Provider Reimbursement Report - KenPAC

This report lists provider reimbursement amounts for the KenPAC payment cycle organized by category of service. This report will only report counts from claims with a Category of Service equal to 00, 41, 43, 74, 75 and 99.

SORT ORDER BY: CDE_COS_ST

2.8.153.1 Technical Name

FIN-801K-M

2.8.153.2 Sort Order

Category of Service

For readability, the report layout displays on the next page.

2.8.153.3 Provider Reimbursement Report - KenPAC Layout

```
Report  : FIN-801K-M                          COMMONWEALTH OF KENTUCKY                          Run Date: MM/DD/CCYY
Process : FINJW80K                      MEDICAID MANAGEMENT INFORMATION SYSTEM                  Run Time:   99:99:99
Location: FINP8010                      PROVIDER REIMBURSEMENT REPORT (KENPAC)                      Page:       9999
                                                      MM/DD/CCYY
PAYMENT CYCLE:    9999
CATEGORY OF SERVICE (COS)        MCHIP                  SCHIP                  MEDICAID                PAID
XX XXXXXXXXXXXXXXXXXXXX
XX      PAID                99,999,999.99          99,999,999.99          99,999,999.99          99,999,999.99
XX      DENIED              99,999,999.99          99,999,999.99          99,999,999.99          99,999,999.99
XX      ADJUSTED            99,999,999.99          99,999,999.99          99,999,999.99          99,999,999.99
XX      MASS ADJ            99,999,999.99          99,999,999.99          99,999,999.99          99,999,999.99
XX      TOTAL               99,999,999.99          99,999,999.99          99,999,999.99          99,999,999.99

XX XXXXXXXXXXXXXXXXXXXX
XX      PAID                99,999,999.99          99,999,999.99          99,999,999.99          99,999,999.99
XX      DENIED              99,999,999.99          99,999,999.99          99,999,999.99          99,999,999.99
XX      ADJUSTED            99,999,999.99          99,999,999.99          99,999,999.99          99,999,999.99
XX      MASS ADJ            99,999,999.99          99,999,999.99          99,999,999.99          99,999,999.99
XX      TOTAL               99,999,999.99          99,999,999.99          99,999,999.99          99,999,999.99

AL TOTAL ALL COS
XX      PAID                99,999,999.99          99,999,999.99          99,999,999.99          99,999,999.99
XX      DENIED              99,999,999.99          99,999,999.99          99,999,999.99          99,999,999.99
XX      ADJUSTED            99,999,999.99          99,999,999.99          99,999,999.99          99,999,999.99
XX      MASS ADJ            99,999,999.99          99,999,999.99          99,999,999.99          99,999,999.99
XX      TOTAL               99,999,999.99          99,999,999.99          99,999,999.99          99,999,999.99

                                          ** E N D   O F   R E P O R T **
```

2.8.153.4 Field Descriptions

Field	Description	Length	Data Type	DB Table	DB Attributes
Adjusted MCHIP	The paid amount of adjusted MCHIP claims.	13	Number	N/A	Calculated Field
Adjusted Medicaid	The paid amount of adjusted Medicaid claims.	13	Number	N/A	Calculated Field
Adjusted Paid	The total paid amount of the claims tied to the category of service	13	Number	N/A	Calculated Field

Adjusted SCHIP	The paid amount of adjusted SCHIP claims.	13	Number	N/A	Calculated Field
Category Of Service	The category of service code and description.	22	Character	T_FIN_COS	DSC_COS
Denied MCHIP	The paid amount of denied MCHIP claims.	13	Number	N/A	Calculated Field
Denied Medicaid	The paid amount of denied Medicaid claims.	13	Number	N/A	Calculated Field
Denied Paid	The total paid amount of the claims tied to the category of service	13	Number	N/A	Calculated Field
Denied SCHIP	The paid amount of denied SCHIP claims.	13	Number	N/A	Calculated Field
Mass Adj MCHIP	The paid amount of mass adjusts MCHIP claims.	13	Number	N/A	Calculated Field
Mass Adj Medicaid	The paid amount of mass adjusts Medicaid claims.	13	Number	N/A	Calculated Field
Mass Adj Paid	The total paid amount of the claims tied to the category of service	13	Number	N/A	Calculated Field
Mass Adj SCHIP	The paid amount of mass adjusts SCHIP claims.	13	Number	N/A	Calculated Field
Paid MCHIP Paid	The paid amount of paid MCHIP claims.	13	Number	N/A	Calculated Field
Paid Medicaid	The paid amount of paid Medicaid claims.	13	Number	N/A	Calculated Field
Paid	The total paid amount of the claims tied to the category of service	13	Number	N/A	Calculated Field
Paid SCHIP Paid	The paid amount of paid SCHIP claims.	13	Number	N/A	Calculated Field
Payment Cycle	The payment cycle number.	4	Number	N/A	N/A
Total	The total paid amount of all the claims tied to the category	13	Number	N/A	Calculated Field

	of service				
Total MCHIP	The paid amount of all paid MCHIP claims for the category of service.	13	Number	N/A	Calculated Field
Total Medicaid	The paid amount of all paid Medicaid claims for the category of service.	13	Number	N/A	Calculated Field
Total SCHIP	The paid amount of all paid SCHIP claims for the category of service.	13	Number	N/A	Calculated Field

2.8.153.5 Associated Programs

Program	Description
finp8010	Provider Reimbursement Report KenPAC

2.8.153.6 Associated Requirements

ID
No associated Requirements found.

2.8.153.7 Change Orders

ID	Name	Description
No associated Change Orders found.		

2.8.154 FIN-801L-M -- Provider Reimbursement Report - Lockin

This report lists provider reimbursement amounts for the Lockin payment cycle organized by category of service. This report will only report counts from claims with a Category of Service equal to 00, 41, 43, 74, 75 and 99.

2.8.154.1 Technical Name

FIN-801L-M

2.8.154.2 Sort Order

Category of Service

For readability, the report layout displays on the next page.

2.8.154.3 Provider Reimbursement Report - Lockin Layout

```
Report  : FIN-801L-M                    COMMONWEALTH OF KENTUCKY                    Run Date: MM/DD/CCYY
Process : FINJM80L                  MEDICAID MANAGEMENT INFORMATION SYSTEM          Run Time:   99:99:99
Location: FINP8010                  PROVIDER REIMBURSEMENT REPORT (LOCKIN)                Page:       9999
                                                  MM/DD/CCYY

PAYMENT CYCLE:    9999
CATEGORY OF SERVICE (COS)       MCHIP                SCHIP                MEDICAID                PAID
XX XXXXXXXXXXXXXXXXXXXX
XX      PAID                99,999,999.99        99,999,999.99        99,999,999.99        99,999,999.99
XX      DENIED              99,999,999.99        99,999,999.99        99,999,999.99        99,999,999.99
XX      ADJUSTED            99,999,999.99        99,999,999.99        99,999,999.99        99,999,999.99
XX      MASS ADJ            99,999,999.99        99,999,999.99        99,999,999.99        99,999,999.99
XX      TOTAL               99,999,999.99        99,999,999.99        99,999,999.99        99,999,999.99

XX XXXXXXXXXXXXXXXXXXXX
XX      PAID                99,999,999.99        99,999,999.99        99,999,999.99        99,999,999.99
XX      DENIED              99,999,999.99        99,999,999.99        99,999,999.99        99,999,999.99
XX      ADJUSTED            99,999,999.99        99,999,999.99        99,999,999.99        99,999,999.99
XX      MASS ADJ            99,999,999.99        99,999,999.99        99,999,999.99        99,999,999.99
XX      TOTAL               99,999,999.99        99,999,999.99        99,999,999.99        99,999,999.99

AL TOTAL ALL COS
XX      PAID                99,999,999.99        99,999,999.99        99,999,999.99        99,999,999.99
XX      DENIED              99,999,999.99        99,999,999.99        99,999,999.99        99,999,999.99
XX      ADJUSTED            99,999,999.99        99,999,999.99        99,999,999.99        99,999,999.99
XX      MASS ADJ            99,999,999.99        99,999,999.99        99,999,999.99        99,999,999.99
XX      TOTAL               99,999,999.99        99,999,999.99        99,999,999.99        99,999,999.99

                                  ** E N D   O F   R E P O R T **
```

2.8.154.4 Field Descriptions

Field	Description	Length	Data Type	DB Table	DB Attributes
Adjusted MCHIP	The paid amount of adjusted MCHIP claims.	13	Number	N/A	Calculated Field
Adjusted Medicaid	The paid amount of adjusted Medicaid claims.	13	Number	N/A	Calculated Field
Adjusted Paid	The total paid amount of the claims tied to the category of service	13	Number	N/A	Calculated Field
Adjusted SCHIP	The paid amount of adjusted SCHIP claims.	13	Number	N/A	Calculated Field
Category Of Service	The category of service code and description.	22	Character	T_FIN_COS	DSC_COS
Denied MCHIP	The paid amount of denied MCHIP claims.	13	Number	N/A	Calculated Field
Denied Medicaid	The paid amount of denied Medicaid claims.	13	Number	N/A	Calculated Field
Denied Paid	The total paid amount of the claims tied to the category of service	13	Number	N/A	Calculated Field
Denied SCHIP	The paid amount of denied SCHIP claims.	13	Number	N/A	Calculated Field
Mass Adj MCHIP	The paid amount of mass adjusts MCHIP claims.	13	Number	N/A	Calculated Field
Mass Adj Medicaid	The paid amount of mass adjusts Medicaid claims.	13	Number	N/A	Calculated Field
Mass Adj Paid	The total paid amount of the claims tied to the category of service	13	Number	N/A	Calculated Field
Mass Adj SCHIP	The paid amount of mass adjusts SCHIP claims.	13	Number	N/A	Calculated Field
Paid MCHIP Paid	The paid amount of paid MCHIP claims.	13	Number	N/A	Calculated Field

Paid Medicaid	The paid amount of paid Medicaid claims.	13	Number	N/A	Calculated Field
Paid	The total paid amount of the claims tied to the category of service	13	Number	N/A	Calculated Field
Paid SCHIP Paid	The paid amount of paid SCHIP claims.	13	Number	N/A	Calculated Field
Payment Cycle	The payment cycle number.	4	Number	N/A	N/A
Total	The total paid amount of all the claims tied to the category of service	13	Number	N/A	Calculated Field
Total MCHIP	The paid amount of all paid MCHIP claims for the category of service.	13	Number	N/A	Calculated Field
Total Medicaid	The paid amount of all paid Medicaid claims for the category of service.	13	Number	N/A	Calculated Field
Total SCHIP	The paid amount of all paid SCHIP claims for the category of service.	13	Number	N/A	Calculated Field

2.8.154.5 Associated Programs

Program	Description
finp8010	Provider Reimbursement Report KenPAC

2.8.154.6 Associated Requirements

ID
No associated Requirements found.

2.8.154.7 Change Orders

ID	Name	Description
No associated Change Orders found.		

2.8.155 FIN-801Q-Q -- Provider Reimbursement Quarterly Report - KenPAC

This report lists provider reimbursement amounts for the quarterly KenPAC payment cycle organized by category of service. This report will only report counts from claims with a Category of Service equal to 00, 41, 43, 74, 75 and 99.

2.8.155.1 Technical Name

FIN-801Q-Q

2.8.155.2 Sort Order

Category of Service

For readability, the report layout displays on the next page.

2.8.155.3 Provider Reimbursement Quarterly Report - KenPAC Layout

```
Report  : FIN-801Q-Q                    COMMONWEALTH OF KENTUCKY                    Run Date: MM/DD/CCYY
Process : FINJQM800                  MEDICAID MANAGEMENT INFORMATION SYSTEM         Run Time:   99:99:99
Location: FINP8010                  PROVIDER REIMBURSEMENT REPORT - KENPAC              Page:       9999
                                                  MM/DD/CCYY

PAYMENT CYCLE:    QRT END
CATEGORY OF SERVICE (COS)        MCHIP                SCHIP                MEDICAID             TOTAL PAID
XX XXXXXXXXXXXXXXXXXXXX
XX      PAID                999,999,999.99       999,999,999.99       999,999,999.99       999,999,999.99
XX      DENIED              999,999,999.99       999,999,999.99       999,999,999.99       999,999,999.99
XX      ADJUSTED            999,999,999.99       999,999,999.99       999,999,999.99       999,999,999.99
XX      MASS ADJ            999,999,999.99       999,999,999.99       999,999,999.99       999,999,999.99
XX      TOTAL               999,999,999.99       999,999,999.99       999,999,999.99       999,999,999.99

XX XXXXXXXXXXXXXXXXXXXX
XX      PAID                999,999,999.99       999,999,999.99       999,999,999.99       999,999,999.99
XX      DENIED              999,999,999.99       999,999,999.99       999,999,999.99       999,999,999.99
XX      ADJUSTED            999,999,999.99       999,999,999.99       999,999,999.99       999,999,999.99
XX      MASS ADJ            999,999,999.99       999,999,999.99       999,999,999.99       999,999,999.99
XX      TOTAL               999,999,999.99       999,999,999.99       999,999,999.99       999,999,999.99

AL TOTAL ALL COS
XX      PAID                999,999,999.99       999,999,999.99       999,999,999.99       999,999,999.99
XX      DENIED              999,999,999.99       999,999,999.99       999,999,999.99       999,999,999.99
XX      ADJUSTED            999,999,999.99       999,999,999.99       999,999,999.99       999,999,999.99
XX      MASS ADJ            999,999,999.99       999,999,999.99       999,999,999.99       999,999,999.99
XX      TOTAL               999,999,999.99       999,999,999.99       999,999,999.99       999,999,999.99

                                        ** E N D   O F   R E P O R T **
```

2.8.155.4 Field Descriptions

Field	Description	Length	Data Type	DB Table	DB Attributes
Adjusted MCHIP	The paid amount of adjusted MCHIP claims.	14	Number	N/A	Calculated Field
Adjusted Medicaid	The paid amount of adjusted Medicaid claims.	14	Number	N/A	Calculated Field
Adjusted Paid	The total paid amount of the claims tied to the category of service	14	Number	N/A	Calculated Field
Adjusted SCHIP	The paid amount of adjusted SCHIP claims.	14	Number	N/A	Calculated Field
Category Of Service	The category of service code and description.	22	Character	T_FIN_COS	DSC_COS
Denied MCHIP	The paid amount of denied MCHIP claims.	14	Number	N/A	Calculated Field
Denied Medicaid	The paid amount of denied Medicaid claims.	13	Number	N/A	Calculated Field
Denied Paid	The total paid amount of the claims tied to the category of service	14	Number	N/A	Calculated Field
Denied SCHIP	The paid amount of denied SCHIP claims.	14	Number	N/A	Calculated Field
Mass Adj MCHIP	The paid amount of mass adjusts MCHIP claims.	14	Number	N/A	Calculated Field
Mass Adj Medicaid	The paid amount of mass adjusts Medicaid claims.	14	Number	N/A	Calculated Field
Mass Adj Paid	The total paid amount of the claims tied to the category of service	14	Number	N/A	Calculated Field
Mass Adj SCHIP	The paid amount of mass adjusts SCHIP claims.	14	Number	N/A	Calculated Field
Paid MCHIP Paid	The paid amount of paid MCHIP claims.	14	Number	N/A	Calculated Field

Paid Medicaid	The paid amount of paid Medicaid claims.	14	Number	N/A	Calculated Field
Paid	The total paid amount of the claims tied to the category of service	14	Number	N/A	Calculated Field
Paid SCHIP Paid	The paid amount of paid SCHIP claims.	14	Number	N/A	Calculated Field
Payment Cycle	The payment cycle number.	7	Character	N/A	N/A
Total MCHIP	The paid amount of all paid MCHIP claims for the category of service.	14	Number	N/A	Calculated Field
Total Medicaid	The paid amount of all paid Medicaid claims for the category of service.	14	Number	N/A	Calculated Field
Total PAID	The total paid amount of all the claims tied to the category of service	14	Number	N/A	Calculated Field
Total SCHIP	The paid amount of all paid SCHIP claims for the category of service.	14	Number	N/A	Calculated Field

2.8.155.5 Associated Programs

Program	Description
finp8010	Provider Reimbursement Report KenPAC

2.8.155.6 Associated Requirements

ID
No associated Requirements found.

2.8.155.7 Change Orders

ID	Name	Description
No associated Change Orders found.		

2.8.156 FIN-8050-Q -- KCHIP Provider Category Of Service Quarterly Cash Report

This report lists provider reimbursement amounts for the KCHIP quarterly cycle organized by category of service.

2.8.156.1 Technical Name

FIN-8050-Q

2.8.156.2 Sort Order

Category of Service

2.8.156.3 KCHIP Provider Category Of Service Quarterly Cash Report Layout

```
Report  : FIN-8050-Q                          COMMONWEALTH OF KENTUCKY                        Run Date: MM/DD/CCYY
Process : FINJQ8055                       MEDICAID MANAGEMENT INFORMATION SYSTEM              Run Time:   99:99:99
Location: FINP8051                     KCHIP PROVIDER CATEGORY OF SERVICE CASH REPORT             Page:       9999
                                                      MM/DD/CCYY
PAYMENT CYCLE:    QRT END
CATEGORY OF SERVICE     (COS)          MCHIP          MCHIP       SCHIP          SCHIP       MCHIP         MCHIP        SCHIP          SCHIP
                                      RECOUP         RECOUP      RECOUP         RECOUP      PAYOUT        PAYOUT       PAYOUT         PAYOUT
                                       COUNT         AMOUNT       COUNT         AMOUNT       COUNT        AMOUNT        COUNT         AMOUNT
XXXXXXXXXXXXXXXXXXXXXXXXXXXXXX XX 99,999,999 999,999,999.99  99,999,999 999,999,999.99  99,999,999 999,999,999.99  99,999,999 999,999,999.99
XXXXXXXXXXXXXXXXXXXXXXXXXXXXXX XX 99,999,999 999,999,999.99  99,999,999 999,999,999.99  99,999,999 999,999,999.99  99,999,999 999,999,999.99
XXXXXXXXXXXXXXXXXXXXXXXXXXXXXX XX 99,999,999 999,999,999.99  99,999,999 999,999,999.99  99,999,999 999,999,999.99  99,999,999 999,999,999.99
XXXXXXXXXXXXXXXXXXXXXXXXXXXXXX XX 99,999,999 999,999,999.99  99,999,999 999,999,999.99  99,999,999 999,999,999.99  99,999,999 999,999,999.99
XXXXXXXXXXXXXXXXXXXXXXXXXXXXXX XX 99,999,999 999,999,999.99  99,999,999 999,999,999.99  99,999,999 999,999,999.99  99,999,999 999,999,999.99
XXXXXXXXXXXXXXXXXXXXXXXXXXXXXX XX 99,999,999 999,999,999.99  99,999,999 999,999,999.99  99,999,999 999,999,999.99  99,999,999 999,999,999.99
XXXXXXXXXXXXXXXXXXXXXXXXXXXXXX XX 99,999,999 999,999,999.99  99,999,999 999,999,999.99  99,999,999 999,999,999.99  99,999,999 999,999,999.99
XXXXXXXXXXXXXXXXXXXXXXXXXXXXXX XX 99,999,999 999,999,999.99  99,999,999 999,999,999.99  99,999,999 999,999,999.99  99,999,999 999,999,999.99
XXXXXXXXXXXXXXXXXXXXXXXXXXXXXX XX 99,999,999 999,999,999.99  99,999,999 999,999,999.99  99,999,999 999,999,999.99  99,999,999 999,999,999.99
XXXXXXXXXXXXXXXXXXXXXXXXXXXXXX XX 99,999,999 999,999,999.99  99,999,999 999,999,999.99  99,999,999 999,999,999.99  99,999,999 999,999,999.99
XXXXXXXXXXXXXXXXXXXXXXXXXXXXXX XX 99,999,999 999,999,999.99  99,999,999 999,999,999.99  99,999,999 999,999,999.99  99,999,999 999,999,999.99
XXXXXXXXXXXXXXXXXXXXXXXXXXXXXX XX 99,999,999 999,999,999.99  99,999,999 999,999,999.99  99,999,999 999,999,999.99  99,999,999 999,999,999.99

SUBTOTAL SCREEN/CLINICS/FAMILY    99,999,999 999,999,999.99  99,999,999 999,999,999.99  99,999,999 999,999,999.99  99,999,999 999,999,999.99
SUBTOTAL ALL OTHER CATEGORIES     99,999,999 999,999,999.99  99,999,999 999,999,999.99  99,999,999 999,999,999.99  99,999,999 999,999,999.99
TOTAL FOR ALL CATEGORIES          99,999,999 999,999,999.99  99,999,999 999,999,999.99  99,999,999 999,999,999.99  99,999,999 999,999,999.99
                                                   ** E N D   O F   R E P O R T **
```

2.8.156.4 Field Descriptions

Field	Description	Length	Data Type	DB Table	DB Attributes
COS	The category of service code.	2	Character	T_FIN_COS	STATE_COS
Category Of Service	The category of service code description.	22	Character	T_FIN_COS	DSC_COS
MCHIP Payout Amount	The total dollar amount of MCHIP recipient payouts processed for the category of service.	14	Number	N/A	Calculated Field
MCHIP Payout Count	The total number of MCHIP recipient payouts processed for the category of service.	13	Number	N/A	Calculated Field
MCHIP Recoup Amount	The total dollar amount of MCHIP recipient recoupments processed for the category of service.	14	Number	N/A	Calculated Field
MCHIP Recoup Count	The total number of MCHIP recipient recoupments processed for the category of service.	13	Number	N/A	Calculated Field
Payment Cycle	The payment cycle number.	7	Character	N/A	N/A
SCHIP Payout Amount	The total dollar amount of SCHIP recipient payouts processed for the category of service.	14	Number	N/A	Calculated Field
SCHIP Payout Count	The total number of SCHIP recipient payouts processed for the category of service.	13	Number	N/A	Calculated Field
SCHIP Recoup Amount	The total dollar amount of SCHIP recipient recoupments processed for the category of service.	14	Number	N/A	Calculated Field
SCHIP Recoup Count	The total number of SCHIP recipient recoupments processed for the category of service.	13	Number	N/A	Calculated Field

Subtotal All Other Categories	The subtotals for all other category of service.	14	Number	N/A	Calculated Field
Subtotal Screen/clinics/family	The subtotals for all screening, clinic, and family planning categories of service.	14	Number	N/A	Calculated Field
Total For All Categories	The column totals for all categories of service	14	Number	N/A	Calculated Field

2.8.156.5 Associated Programs

Program	Description
finp8050	KCHIP Provider Category Of Service Cash report

2.8.156.6 Associated Requirements

ID
30.050.009.002.16

2.8.156.7 Change Orders

ID	Name	Description
8843	FIN800Q & FIN805*Q ERRORS	From: Bechtel, Steve (CHFS DMS) [mailto:Steve.Bechtel@ky.gov] Sent: Monday, July 23, 2007 3:49 PM To: KY_MMIS_Action_Item_Track@eds.com Cc: Conway, Paula J; Bullock, Tammy (CHFS DMS); Keffer, Cassie (CHFS DMS) Subject: FINANCIAL - FIN-8055-Q is not correct Importance: High The quarterly shows Refund Amount for COS 99 as $6,438,063.75 when the month of June shows $1,961,315.08 and April and May show $0.00?.. There should not be anything showing under COS 99 on either the monthly or Quarterly Reports None of the FIN8000W, FIN8050W or FIN8055W BALANCED FOR THE QUARTER OF JUNE 2007. IN ADDITION, WE NEED TO REMOVE COS 99 FROM REPORTING ON THE FIN8055Q Issue Tracking # 911

2.8.157 FIN-8050-W -- KCHIP Provider Category Of Service Cash Report

This report lists provider reimbursement amounts for the KCHIP weekly payment cycle organized by category of service.

SORT GROUP BY: CDE_COS_ST, DSC_COS_VALUE, DSC_FUND

2.8.157.1 Technical Name

FIN-8050-W

2.8.157.2 Sort Order

Category of Service

2.8.157.3 KCHIP Provider Category Of Service Cash Report Layout

```
Report  : FIN-8050-W                          COMMONWEALTH OF KENTUCKY                        Run Date: MM/DD/CCYY
Process : FINJW8055                      MEDICAID MANAGEMENT INFORMATION SYSTEM               Run Time:   99:99:99
Location: FINP8051                    KCHIP PROVIDER CATEGORY OF SERVICE CASH REPORT              Page:       9999
                                                      MM/DD/CCYY
PAYMENT CYCLE:    9999
CATEGORY OF SERVICE     (COS)          MCHIP          MCHIP       SCHIP          SCHIP       MCHIP         MCHIP        SCHIP          SCHIP
                                      RECOUP         RECOUP      RECOUP         RECOUP      PAYOUT        PAYOUT       PAYOUT         PAYOUT
                                       COUNT         AMOUNT       COUNT         AMOUNT       COUNT        AMOUNT        COUNT         AMOUNT
XXXXXXXXXXXXXXXXXXXXXXXXXXXXXX XX 99,999,999  99,999,999.99  99,999,999  99,999,999.99  99,999,999  99,999,999.99  99,999,999  99,999,999.99
XXXXXXXXXXXXXXXXXXXXXXXXXXXXXX XX 99,999,999  99,999,999.99  99,999,999  99,999,999.99  99,999,999  99,999,999.99  99,999,999  99,999,999.99
XXXXXXXXXXXXXXXXXXXXXXXXXXXXXX XX 99,999,999  99,999,999.99  99,999,999  99,999,999.99  99,999,999  99,999,999.99  99,999,999  99,999,999.99
XXXXXXXXXXXXXXXXXXXXXXXXXXXXXX XX 99,999,999  99,999,999.99  99,999,999  99,999,999.99  99,999,999  99,999,999.99  99,999,999  99,999,999.99
XXXXXXXXXXXXXXXXXXXXXXXXXXXXXX XX 99,999,999  99,999,999.99  99,999,999  99,999,999.99  99,999,999  99,999,999.99  99,999,999  99,999,999.99
XXXXXXXXXXXXXXXXXXXXXXXXXXXXXX XX 99,999,999  99,999,999.99  99,999,999  99,999,999.99  99,999,999  99,999,999.99  99,999,999  99,999,999.99
XXXXXXXXXXXXXXXXXXXXXXXXXXXXXX XX 99,999,999  99,999,999.99  99,999,999  99,999,999.99  99,999,999  99,999,999.99  99,999,999  99,999,999.99
XXXXXXXXXXXXXXXXXXXXXXXXXXXXXX XX 99,999,999  99,999,999.99  99,999,999  99,999,999.99  99,999,999  99,999,999.99  99,999,999  99,999,999.99
XXXXXXXXXXXXXXXXXXXXXXXXXXXXXX XX 99,999,999  99,999,999.99  99,999,999  99,999,999.99  99,999,999  99,999,999.99  99,999,999  99,999,999.99
XXXXXXXXXXXXXXXXXXXXXXXXXXXXXX XX 99,999,999  99,999,999.99  99,999,999  99,999,999.99  99,999,999  99,999,999.99  99,999,999  99,999,999.99
XXXXXXXXXXXXXXXXXXXXXXXXXXXXXX XX 99,999,999  99,999,999.99  99,999,999  99,999,999.99  99,999,999  99,999,999.99  99,999,999  99,999,999.99
XXXXXXXXXXXXXXXXXXXXXXXXXXXXXX XX 99,999,999  99,999,999.99  99,999,999  99,999,999.99  99,999,999  99,999,999.99  99,999,999  99,999,999.99
XXXXXXXXXXXXXXXXXXXXXXXXXXXXXX XX 99,999,999  99,999,999.99  99,999,999  99,999,999.99  99,999,999  99,999,999.99  99,999,999  99,999,999.99
XXXXXXXXXXXXXXXXXXXXXXXXXXXXXX XX 99,999,999  99,999,999.99  99,999,999  99,999,999.99  99,999,999  99,999,999.99  99,999,999  99,999,999.99
XXXXXXXXXXXXXXXXXXXXXXXXXXXXXX XX 99,999,999  99,999,999.99  99,999,999  99,999,999.99  99,999,999  99,999,999.99  99,999,999  99,999,999.99

SUBTOTAL SCREEN/CLINICS/FAMILY    99,999,999  99,999,999.99  99,999,999  99,999,999.99  99,999,999  99,999,999.99  99,999,999  99,999,999.99
SUBTOTAL ALL OTHER CATEGORIES     99,999,999  99,999,999.99  99,999,999  99,999,999.99  99,999,999  99,999,999.99  99,999,999  99,999,999.99
TOTAL FOR ALL CATEGORIES          99,999,999  99,999,999.99  99,999,999  99,999,999.99  99,999,999  99,999,999.99  99,999,999  99,999,999.99
                                                ** E N D   O F   R E P O R T **
```

2.8.157.4 Field Descriptions

Field	Description	Length	Data Type	DB Table	DB Attributes
COS	The category of service code.	2	Character	T_FIN_COS	STATE_COS
Category Of Service	The category of service code description.	22	Character	T_FIN_COS	DSC_COS
MCHIP Payout Amount	The total dollar amount of MCHIP recipient payouts processed for the category of service.	13	Number	N/A	Calculated Field
MCHIP Payout Count	The total number of MCHIP recipient payouts processed for the category of service.	13	Number	N/A	Calculated Field
MCHIP Recoup Amount	The total dollar amount of MCHIP recipient recoupments processed for the category of service.	13	Number	N/A	Calculated Field
MCHIP Recoup Count	The total number of MCHIP recipient recoupments processed for the category of service.	13	Number	N/A	Calculated Field
Payment Cycle	The payment cycle number.	4	Number	N/A	N/A
SCHIP Payout Amount	The total dollar amount of SCHIP recipient payouts processed for the category of service.	13	Number	N/A	Calculated Field
SCHIP Payout Count	The total number of SCHIP recipient payouts processed for the category of service.	13	Number	N/A	Calculated Field
SCHIP Recoup Amount	The total dollar amount of SCHIP recipient recoupments processed for the category of service.	13	Number	N/A	Calculated Field
SCHIP Recoup Count	The total number of SCHIP recipient recoupments processed for the category of service.	13	Number	N/A	Calculated Field
Subtotal All Other	The subtotals for all other category of service.	13	Number	N/A	Calculated Field

Categories					
Subtotal Screen/clinics/family	The subtotals for all screening, clinic, and family planning categories of service.	13	Number	N/A	Calculated Field
Total For All Categories	The column totals for all categories of service	13	Number	N/A	Calculated Field

2.8.157.5 Associated Programs

Program	Description
finp8050	KCHIP Provider Category Of Service Cash report

2.8.157.6 Associated Requirements

ID
30.050.009.002.16

2.8.157.7 Change Orders

ID	Name	Description
8843	FIN800Q & FIN805*Q ERRORS	From: Bechtel, Steve (CHFS DMS) [mailto:Steve.Bechtel@ky.gov] Sent: Monday, July 23, 2007 3:49 PM To: KY_MMIS_Action_Item_Track@eds.com Cc: Conway, Paula J; Bullock, Tammy (CHFS DMS); Keffer, Cassie (CHFS DMS) Subject: FINANCIAL - FIN-8055-Q is not correct Importance: High The quarterly shows Refund Amount for COS 99 as $6,438,063.75 when the month of June shows $1,961,315.08 and April and May show $0.00?.. There should not be anything showing under COS 99 on either the monthly or Quarterly Reports None of the FIN8000W, FIN8050W or FIN8055W BALANCED FOR THE QUARTER OF JUNE 2007. IN ADDITION, WE NEED TO REMOVE COS 99 FROM REPORTING ON THE FIN8055Q Issue Tracking # 911

2.8.158 FIN-8053-W -- Provider Accounts Receivable Aging (Charge Off)

This report lists all Provider Accounts Receivable in a Charge Off status, detailing the balance and age of each portion of the balance.

2.8.158.1 Technical Name

FIN-8053-W

2.8.158.2 Sort Order

Days Outstanding

Provider Number

2.8.158.3 Provider Accounts Receivable Aging (Charge Off) Layout

```
Report  : FIN-8053-W                          COMMONWEALTH OF KENTUCKY                                  Run Date: MM/DD/YYYY
Process : FINJW370                       MEDICAID MANAGEMENT INFORMATION SYSTEM                         Run Time:   99:99:99
Location: FINP3001                            PROVIDER ACCOUNTS RECEIVABLE                                  Page:       9999
                                          CHARGE-OFF STATUS AGING BY FUND CODE
                                                 MM/DD/CCYY - MM/DD/CCYY

FUND:  XXXXXXXXXXXXXXXXXXXXXXXXXXXXXXXXXXXXXXXXXXXXXXXXXXXX
PROVIDER  DAYS    LAST    LETTER  ACTIVITY     A/R        RSN  1OC     ORGINAL         CASH          OFFSET     ADJUSTMENT        BALANCE
NUMBER    OUTST   DATE     DATE     FLAG      NUMBER      CODE COD     AMOUNT        RECEIPTS         AMOUNT       AMOUNT

XXXXXXXXXX 9999 YYYYMMDD YYYYMMDD    X    9999999999999   XXXX  X 99,999,999.99  99,999,999.99  99,999,999.99  99,999,999.99   99,999,999.99
XXXXXXXXXX 9999 YYYYMMDD YYYYMMDD    X    9999999999999   XXXX  X 99,999,999.99  99,999,999.99  99,999,999.99  99,999,999.99   99,999,999.99
XXXXXXXXXX 9999 YYYYMMDD YYYYMMDD    X    9999999999999   XXXX  X 99,999,999.99  99,999,999.99  99,999,999.99  99,999,999.99   99,999,999.99
XXXXXXXXXX 9999 YYYYMMDD YYYYMMDD    X    9999999999999   XXXX  X 99,999,999.99  99,999,999.99  99,999,999.99  99,999,999.99   99,999,999.99
SUBTOTALS       90+                                                 999,999,999.99 999,999,999.99 999,999,999.99 999,999,999.999 999,999,999.99

FUND TOTALS                                                         999,999,999.99 999,999,999.99 999,999,999.99 999,999,999.999 999,999,999.99

GRAND TOTALS                                                        9,999,999,999.99              9,999,999,999.99               9,999,999,999.99
                                                                                   9,999,999,999.99               9,999,999,999.99
```

2.8.158.4 Field Descriptions

Field	Description	Length	Data Type	DB Table	DB Attributes
A/R Number	The transaction control number used to identify and relate records for one accounts receivable transaction.	13	Number	T_ACCT_REC	SAK_ACCT_REC

Field	Description	Length	Data Type	DB Table	DB Attributes
Activity Flag	The activity flag is set to 'Y' if the account receivable has had activity in the past 30 days. The field is set by comparing DTE_GENERIC on T_AR_DISP to the reporting period end date.	1	Character	N/A	Calculated Field
Adjustment Amount	This indicates the changes made to the A/R balance other than cash or offsets, such as state directed write-offs or increases.	10	Number	N/A	Calculated Field
Balance	The balance portion of the balance that is under 31 days, under 61 days, under 91 days, or over 90 days is printed beneath the appropriate column heading.	13	Number	N/A	Calculated Field
Cash Receipts	This indicates a manual payment made to the fund to decrease an account receivable file.	10	Number	T_CASH_RECEIPT	CHECK_AMT
Days Outst	The age in days of the outstanding balance.	4	Number	N/A	Calculated Field
Fund	The financial fund code associated to the Accounts Receivable. The financial fund code is used in financial reporting to correctly categorize funds (money).	50	Character	T_FIN_FUND_CODE	DSC_FUND
Fund Totals	The total amount of balances still outstanding as reported.	13	Number	N/A	Calculated Field
Grand Totals	The grand total of all A/R's in a charge off status.	13	Number	N/A	Calculated Field
Last Date	The last activity date.	10	Character	T_ACCT_REC	CDE_DISP_REASON
Letter Date	The date the A/R transaction was entered in MMDDYYYY format.	10	Date (MM/DD/CCYY)	T_ACCT_REC	DTE_ADDED
Loc Cod	A two-digit code indicating the DMS department originating the Accounts Receivable Transaction.	1	Character	T_ACCT_REC	CDE_UNIT_DEPT

Field	Description	Length	Data Type	DB Table	DB Attributes
Offset Amount	This indicates the amount which has been offset from the weekly claim cycle to satisfy the accounts receivable to date. In addition, other state directed offsets will also be reflected in this field.	10	Number	T_AR_DISP	AMT
Original Amount	The original amount of the account receivable.	13	Number	T_ACCT_REC	AMT_SETUP
Provider Number	The provider identification number.	10	Number	T_PR_IDENTIFIER	ID_PROVIDER
Rsn Cod	A two-digit code specifying the reason an A/R adjustment was applied to a provider's account.	4	Character	T_ACCT_REC	CDE_REASON_FOUR
Subtotals	The totals of the original amount, fewer than 31 days, fewer than 61 days, fewer than 91 days, and over 90 days are printed.	13	Number	N/A	Calculated Field

2.8.158.5 Associated Programs

Program	Description
finp8053	Provider Accounts Receivable Aging Report
finp8053	Provider Accounts Receivable Aging Report

2.8.158.6 Associated Requirements

ID
30.090.009.003.1

2.8.158.7 Change Orders

ID	Name	Description
1144	Modify FIN-3001-W AR AGING	Modify the existing Core AR Aging report FIN-3001-W to sort by provider number. Also create a new report FIN-8053-W to report Charge off status ARs.

2.8.159 FIN-8055-Q -- Provider Category Of Service Quarterly Cash Report

This report lists provider cash activity amounts for the quarter organized by category of service.

2.8.159.1 Technical Name

FIN-8055-Q

2.8.159.2 Sort Order

Category of Service

2.8.159.3 Provider Category Of Service Quarterly Cash Report Layout

```
Report  : FIN-8055-Q                    COMMONWEALTH OF KENTUCKY                    Run Date: MM/DD/CCYY
Process : FINJQ8055                MEDICAID MANAGEMENT INFORMATION SYSTEM          Run Time:   99:99:99
Location: FINP8055                PROVIDER CATEGORY OF SERVICE CASH REPORT            Page:       9999
                                              MM/DD/CCYY
PAYMENT CYCLE:    QRT END
CATEGORY OF SERVICE     (COS)        REFUND        REFUND      RECOUP        RECOUP    WITHHOLD      WITHHOLD       PAYOUT        PAYOUT
                                      COUNT        AMOUNT       CLAIM        AMOUNT       CLAIM        AMOUNT        CLAIM        AMOUNT
                                                                 COUNT                     COUNT                       COUNT
XXXXXXXXXXXXXXXXXXXXXXXXXXXXXX XX 99,999,999 999,999,999.99  99,999,999 999,999,999.99  99,999,999 999,999,999.99  99,999,999 999,999,999.99
XXXXXXXXXXXXXXXXXXXXXXXXXXXXXX XX 99,999,999 999,999,999.99  99,999,999 999,999,999.99  99,999,999 999,999,999.99  99,999,999 999,999,999.99
XXXXXXXXXXXXXXXXXXXXXXXXXXXXXX XX 99,999,999 999,999,999.99  99,999,999 999,999,999.99  99,999,999 999,999,999.99  99,999,999 999,999,999.99
XXXXXXXXXXXXXXXXXXXXXXXXXXXXXX XX 99,999,999 999,999,999.99  99,999,999 999,999,999.99  99,999,999 999,999,999.99  99,999,999 999,999,999.99
XXXXXXXXXXXXXXXXXXXXXXXXXXXXXX XX 99,999,999 999,999,999.99  99,999,999 999,999,999.99  99,999,999 999,999,999.99  99,999,999 999,999,999.99
XXXXXXXXXXXXXXXXXXXXXXXXXXXXXX XX 99,999,999 999,999,999.99  99,999,999 999,999,999.99  99,999,999 999,999,999.99  99,999,999 999,999,999.99
XXXXXXXXXXXXXXXXXXXXXXXXXXXXXX XX 99,999,999 999,999,999.99  99,999,999 999,999,999.99  99,999,999 999,999,999.99  99,999,999 999,999,999.99
XXXXXXXXXXXXXXXXXXXXXXXXXXXXXX XX 99,999,999 999,999,999.99  99,999,999 999,999,999.99  99,999,999 999,999,999.99  99,999,999 999,999,999.99
XXXXXXXXXXXXXXXXXXXXXXXXXXXXXX XX 99,999,999 999,999,999.99  99,999,999 999,999,999.99  99,999,999 999,999,999.99  99,999,999 999,999,999.99
XXXXXXXXXXXXXXXXXXXXXXXXXXXXXX XX 99,999,999 999,999,999.99  99,999,999 999,999,999.99  99,999,999 999,999,999.99  99,999,999 999,999,999.99
XXXXXXXXXXXXXXXXXXXXXXXXXXXXXX XX 99,999,999 999,999,999.99  99,999,999 999,999,999.99  99,999,999 999,999,999.99  99,999,999 999,999,999.99
XXXXXXXXXXXXXXXXXXXXXXXXXXXXXX XX 99,999,999 999,999,999.99  99,999,999 999,999,999.99  99,999,999 999,999,999.99  99,999,999 999,999,999.99
XXXXXXXXXXXXXXXXXXXXXXXXXXXXXX XX 99,999,999 999,999,999.99  99,999,999 999,999,999.99  99,999,999 999,999,999.99  99,999,999 999,999,999.99
XXXXXXXXXXXXXXXXXXXXXXXXXXXXXX XX 99,999,999 999,999,999.99  99,999,999 999,999,999.99  99,999,999 999,999,999.99  99,999,999 999,999,999.99
XXXXXXXXXXXXXXXXXXXXXXXXXXXXXX XX 99,999,999 999,999,999.99  99,999,999 999,999,999.99  99,999,999 999,999,999.99  99,999,999 999,999,999.99
XXXXXXXXXXXXXXXXXXXXXXXXXXXXXX XX 99,999,999 999,999,999.99  99,999,999 999,999,999.99  99,999,999 999,999,999.99  99,999,999 999,999,999.99

SUBTOTAL SCREEN/CLINICS/FAMILY    99,999,999 999,999,999.99  99,999,999 999,999,999.99  99,999,999 999,999,999.99  99,999,999 999,999,999.99
SUBTOTAL ALL OTHER CATEGORIES     99,999,999 999,999,999.99  99,999,999 999,999,999.99  99,999,999 999,999,999.99  99,999,999 999,999,999.99
TOTAL FOR ALL CATEGORIES          99,999,999 999,999,999.99  99,999,999 999,999,999.99  99,999,999 999,999,999.99  99,999,999 999,999,999.99
                                                ** E N D   O F   R E P O R T **
```

2.8.159.4 Field Descriptions

Field	Description	Length	Data Type	DB Table	DB Attributes
Category Of Service	The category of service code and description.	22	Character	T_FIN_COS	DSC_COS
Payment Cycle	The payment cycle number.	7	Character	N/A	N/A
Payout Amount	The total dollar amount of payouts processed for the category of service.	14	Number	N/A	Calculated Field
Payout Claim Count	The total number of payouts processed for the category of service.	13	Number	N/A	Calculated Field
Recoup Amount	The total dollar amount of recoupments processed for the category of service.	14	Number	N/A	Calculated Field
Recoup Claim Count	The total number of recoupments processed for the category of service.	13	Number	N/A	Calculated Field
Refund Amount	The total dollar amount of refunds processed for the category of service.	14	Number	N/A	Calculated Field
Refund Count	The total number of refunds processed for the category of service.	13	Number	N/A	Calculated Field
Subtotal All Other Categories	The subtotals for all other category of service.	14	Number	N/A	Calculated Field
Subtotal Screen/clinics/family	The subtotals for all screening, clinic, and family planning categories of service.	14	Number	N/A	Calculated Field
Total For All Categories	The column totals for all categories of service	14	Number	N/A	Calculated Field

Withhold Amount	The total dollar amount withholdings processed for the category of service.	14	Number	N/A	Calculated Field
Withhold Claim Count	The total number of withholdings processed for the category of service.	13	Number	N/A	Calculated Field

2.8.159.5 Associated Programs

Program	Description
finp8055	Provider Category Of Service Cash Report

2.8.159.6 Associated Requirements

ID
30.050.009.002.16

2.8.159.7 Change Orders

ID	Name	Description
8843	FIN800Q & FIN805*Q ERRORS	From: Bechtel, Steve (CHFS DMS) [mailto:Steve.Bechtel@ky.gov] Sent: Monday, July 23, 2007 3:49 PM To: KY_MMIS_Action_Item_Track@eds.com Cc: Conway, Paula J; Bullock, Tammy (CHFS DMS); Keffer, Cassie (CHFS DMS) Subject: FINANCIAL - FIN-8055-Q is not correct Importance: High The quarterly shows Refund Amount for COS 99 as $6,438,063.75 when the month of June shows $1,961,315.08 and April and May show $0.00?.. There should not be anything showing under COS 99 on either the monthly or Quarterly Reports None of the FIN8000W, FIN8050W or FIN8055W BALANCED FOR THE QUARTER OF JUNE 2007. IN ADDITION, WE NEED TO REMOVE COS 99 FROM REPORTING ON THE FIN8055Q Issue Tracking # 911

2.8.160 FIN-8055-W -- Provider Category Of Service Cash Report

This report lists provider cash activity amounts for the payment cycle organized by category of service.

2.8.160.1 Technical Name

FIN-8055-W

2.8.160.2 Sort Order

Category of Service

2.8.160.3 Provider Category Of Service Cash Report Layout

```
Report  : FIN-8055-W                    COMMONWEALTH OF KENTUCKY                    Run Date: MM/DD/CCYY
Process : FINJW8055                MEDICAID MANAGEMENT INFORMATION SYSTEM          Run Time:   99:99:99
Location: FINP8055                PROVIDER CATEGORY OF SERVICE CASH REPORT            Page:       9999
                                            MM/DD/CCYY
PAYMENT CYCLE:    9999
CATEGORY OF SERVICE     (COS)        REFUND        REFUND      RECOUP        RECOUP    WITHHOLD      WITHHOLD       PAYOUT         PAYOUT
                                      COUNT        AMOUNT       CLAIM        AMOUNT       CLAIM        AMOUNT        CLAIM         AMOUNT
                                                                 COUNT                     COUNT                       COUNT
XXXXXXXXXXXXXXXXXXXXXXXXXXXXXX XX 99,999,999  99,999,999.99  99,999,999  99,999,999.99  99,999,999  99,999,999.99  99,999,999  99,999,999.99
XXXXXXXXXXXXXXXXXXXXXXXXXXXXXX XX 99,999,999  99,999,999.99  99,999,999  99,999,999.99  99,999,999  99,999,999.99  99,999,999  99,999,999.99
XXXXXXXXXXXXXXXXXXXXXXXXXXXXXX XX 99,999,999  99,999,999.99  99,999,999  99,999,999.99  99,999,999  99,999,999.99  99,999,999  99,999,999.99
XXXXXXXXXXXXXXXXXXXXXXXXXXXXXX XX 99,999,999  99,999,999.99  99,999,999  99,999,999.99  99,999,999  99,999,999.99  99,999,999  99,999,999.99
XXXXXXXXXXXXXXXXXXXXXXXXXXXXXX XX 99,999,999  99,999,999.99  99,999,999  99,999,999.99  99,999,999  99,999,999.99  99,999,999  99,999,999.99
XXXXXXXXXXXXXXXXXXXXXXXXXXXXXX XX 99,999,999  99,999,999.99  99,999,999  99,999,999.99  99,999,999  99,999,999.99  99,999,999  99,999,999.99
XXXXXXXXXXXXXXXXXXXXXXXXXXXXXX XX 99,999,999  99,999,999.99  99,999,999  99,999,999.99  99,999,999  99,999,999.99  99,999,999  99,999,999.99
XXXXXXXXXXXXXXXXXXXXXXXXXXXXXX XX 99,999,999  99,999,999.99  99,999,999  99,999,999.99  99,999,999  99,999,999.99  99,999,999  99,999,999.99
XXXXXXXXXXXXXXXXXXXXXXXXXXXXXX XX 99,999,999  99,999,999.99  99,999,999  99,999,999.99  99,999,999  99,999,999.99  99,999,999  99,999,999.99
XXXXXXXXXXXXXXXXXXXXXXXXXXXXXX XX 99,999,999  99,999,999.99  99,999,999  99,999,999.99  99,999,999  99,999,999.99  99,999,999  99,999,999.99
XXXXXXXXXXXXXXXXXXXXXXXXXXXXXX XX 99,999,999  99,999,999.99  99,999,999  99,999,999.99  99,999,999  99,999,999.99  99,999,999  99,999,999.99
XXXXXXXXXXXXXXXXXXXXXXXXXXXXXX XX 99,999,999  99,999,999.99  99,999,999  99,999,999.99  99,999,999  99,999,999.99  99,999,999  99,999,999.99
XXXXXXXXXXXXXXXXXXXXXXXXXXXXXX XX 99,999,999  99,999,999.99  99,999,999  99,999,999.99  99,999,999  99,999,999.99  99,999,999  99,999,999.99
XXXXXXXXXXXXXXXXXXXXXXXXXXXXXX XX 99,999,999  99,999,999.99  99,999,999  99,999,999.99  99,999,999  99,999,999.99  99,999,999  99,999,999.99
XXXXXXXXXXXXXXXXXXXXXXXXXXXXXX XX 99,999,999  99,999,999.99  99,999,999  99,999,999.99  99,999,999  99,999,999.99  99,999,999  99,999,999.99

SUBTOTAL SCREEN/CLINICS/FAMILY    99,999,999  99,999,999.99  99,999,999  99,999,999.99  99,999,999  99,999,999.99  99,999,999  99,999,999.99
SUBTOTAL ALL OTHER CATEGORIES     99,999,999  99,999,999.99  99,999,999  99,999,999.99  99,999,999  99,999,999.99  99,999,999  99,999,999.99
TOTAL FOR ALL CATEGORIES          99,999,999  99,999,999.99  99,999,999  99,999,999.99  99,999,999  99,999,999.99  99,999,999  99,999,999.99
                                                ** E N D   O F   R E P O R T **
```

2.8.160.4 Field Descriptions

Field	Description	Length	Data Type	DB Table	DB Attributes
Category Of Service	The category of service code and description.	22	Character	T_FIN_COS	DSC_COS
Payment Cycle	The payment cycle number.	4	Number	N/A	N/A
Payout Amount	The total dollar amount of payouts processed for the category of service.	13	Number	N/A	Calculated Field
Payout Claim Count	The total number of payouts processed for the category of service.	13	Number	N/A	Calculated Field
Recoup Amount	The total dollar amount of recoupments processed for the category of service.	13	Number	N/A	Calculated Field
Recoup Claim Count	The total number of recoupments processed for the category of service.	13	Number	N/A	Calculated Field
Refund Amount	The total dollar amount of refunds processed for the category of service.	13	Number	N/A	Calculated Field
Refund Count	The total number of refunds processed for the category of service.	13	Number	N/A	Calculated Field
Subtotal All Other Categories	The subtotals for all other category of service.	13	Number	N/A	Calculated Field
Subtotal Screen/clinics/family	The subtotals for all screening, clinic, and family planning categories of service.	13	Number	N/A	Calculated Field
Total For All Categories	The column totals for all categories of service	13	Number	N/A	Calculated Field
Withhold Amount	The total dollar amount withholdings processed for the	13	Number	N/A	Calculated Field

	category of service.				
Withhold Claim Count	The total number of withholdings processed for the category of service.	13	Number	N/A	Calculated Field

2.8.160.5 Associated Programs

Program	Description
finp8055	Provider Category Of Service Cash Report

2.8.160.6 Associated Requirements

ID
30.050.009.002.16

2.8.160.7 Change Orders

ID	Name	Description
8843	FIN800Q & FIN805*Q ERRORS	From: Bechtel, Steve (CHFS DMS) [mailto:Steve.Bechtel@ky.gov] Sent: Monday, July 23, 2007 3:49 PM To: KY_MMIS_Action_Item_Track@eds.com Cc: Conway, Paula J; Bullock, Tammy (CHFS DMS); Keffer, Cassie (CHFS DMS) Subject: FINANCIAL - FIN-8055-Q is not correct Importance: High The quarterly shows Refund Amount for COS 99 as $6,438,063.75 when the month of June shows $1,961,315.08 and April and May show $0.00?.. There should not be anything showing under COS 99 on either the monthly or Quarterly Reports None of the FIN8000W, FIN8050W or FIN8055W BALANCED FOR THE QUARTER OF JUNE 2007. IN ADDITION, WE NEED TO REMOVE COS 99 FROM REPORTING ON THE FIN8055Q Issue Tracking # 911

2.8.161 FIN-8061-W -- Provider Accounts Payable Aging Report

This report lists all active Provider Accounts Payable, detailing the balance and age of expenditures. Categorized by AGE - 0 - 7 Days; 8 - 14 Days; 15 - 21 Days; Over 30 Days

2.8.161.1 Technical Name

FIN-8061-W

2.8.161.2 Sort Order

Age

Expenditure Number

Provider Number

2.8.161.3 Provider Accounts Payable Aging Report Layout

```
Report  : FIN-8061-W                          COMMONWEALTH OF KENTUCKY                                  Run Date: MM/DD/YYYY
Process : FINJW861                       MEDICAID MANAGEMENT INFORMATION SYSTEM                         Run Time:   HH:MM:SS
Location: FINP8061                       PROVIDER ACCOUNTS PAYABLE AGING REPORT                         Page:      9,999
                                                   PERIOD: MM/DD/YYYY

0 - 7 DAYS
EXPENDITURE         PROVIDER       STAT    RSN      UNIT      DATE          ORGINAL         BALANCE
  NUMBER             NUMBER        COD     COD      DEPT     ENTERED         AMOUNT          AMOUNT          AGE

9999999999999     XXXXXXXXXXXX      X      9999     9999     MM/DD/CCYY   99,999,999.99   99,999,999.99    9999
9999999999999     XXXXXXXXXXXX      X      9999     9999     MM/DD/CCYY   99,999,999.99   99,999,999.99    9999
9999999999999     XXXXXXXXXXXX      X      9999     9999     MM/DD/CCYY   99,999,999.99   99,999,999.99    9999
9999999999999     XXXXXXXXXXXX      X      9999     9999     MM/DD/CCYY   99,999,999.99   99,999,999.99    9999
SUBTOTALS       0 - 7 DAYS                                               999,999,999.99  999,999,999.99

8 - 14 DAYS
EXPENDITURE         PROVIDER       STAT    RSN      UNIT      DATE          ORGINAL         BALANCE
  NUMBER             NUMBER        COD     COD      DEPT     ENTERED         AMOUNT          AMOUNT          AGE

9999999999999     XXXXXXXXXXXX      X      9999     9999     MM/DD/CCYY   99,999,999.99   99,999,999.99    9999
9999999999999     XXXXXXXXXXXX      X      9999     9999     MM/DD/CCYY   99,999,999.99   99,999,999.99    9999
9999999999999     XXXXXXXXXXXX      X      9999     9999     MM/DD/CCYY   99,999,999.99   99,999,999.99    9999
9999999999999     XXXXXXXXXXXX      X      9999     9999     MM/DD/CCYY   99,999,999.99   99,999,999.99    9999
SUBTOTALS       8 - 14 DAYS                                              999,999,999.99  999,999,999.99


GRAND TOTALS                                                           9,999,999,999.99  9,999,999,999.99
```

2.8.161.4 Field Descriptions

Field	Description	Length	Data Type	DB Table	DB Attributes
# - # DAYS	0 - 7 Days, 8 - 14 Days, 15 - 21 Days, Over 30 Days	11	Number	N/A	N/A
Age	The age in days of the outstanding balance.	4	Number	N/A	Calculated Field
Balance Amount	The balance amount of the account payable. The original amount and the balance should always be the same.	13	Number	T_EXPENDITURE	AMT_PAID
Date Entered	The date the A/P transaction was entered in MMDDYYYY format.	10	Date (MM/DD/CCYY)	T_ACCT_REC	DTE_ADDED
Expenditure Number	The number that uniquely identifies an expenditure transaction.	13	Number	T_EXPENDITURE	SAK_EXPENDITURE
Grand Totals	The totals of the original amount, fewer than 31 days, fewer than 61 days, fewer than 91 days, and over 90 days are printed.	13	Number	N/A	Calculated Field
Original Amount	The original amount of the account payable.	13	Number	T_EXPENDITURE	AMT_PAID
Provider Number	The provider identification number.	10	Number	T_PR_IDENTIFIER	ID_PROVIDER
Rsn Code	A four-digit code specifying the reason an A/P adjustment was applied to a provider's account.	4	Character	T_ACCT_REC	CDE_REASON_FOUR
Stat Cod	A one-digit code indicating the status of the expenditure transaction (A = Activated; H = Hold; P = Pending).	1	Character	T_ACCT_REC	CDE_DISP_REASON
Subtotal	The balance portion of the balance that is under 31 days, under 61 days, under 91 days, or over 90 days is printed beneath the appropriate column heading.	13	Number	N/A	Calculated Field
Unit Dept	Identifies the unit\department that created the financial transaction.	4	Number	T_EXPENDITURE	CDE_UNIT_DEPT

2.8.161.5 Associated Programs

Program	Description
finp8061	Provider Accounts Payable Aging Report

2.8.161.6 Associated Requirements

ID
30.090.009.003.1

2.8.161.7 Change Orders

ID	Name	Description
1145	create FIN-8061-W expd aging	create the legacy KYMC80600-R001 payout aging report.

2.8.162 FIN-8062-W -- Provider AR On Hold for Status Code B C J U W-Z

To report the A/R records that are on hold for status code B, C, J, U, and W-Z on the AR Master file

SORT GROUP BY ACCT_REC.NUM_CONTROL_AR, PR_IDENTIFIER.ID_PROVIDER, _ACCT_REC.AMT_SETUP, ACCT_REC.DTE_AR_LIABILITY, ACCT_REC.CDE_TRACKING_STATUS, PR_TYPE.CDE_PROV_TYPE, ACCT_REC.CDE_REASON_FOUR, ACCT_REC.CDE_UNIT_DEPT

SORT ORDER BY PR_TYPE.CDE_PROV_TYPE, ACCT_REC.CDE_TRACKING_STATUS, PR_IDENTIFIER.ID_PROVIDER

2.8.162.1 Technical Name

FIN-8062-W

2.8.162.2 Sort Order

Provider Type Code

A/R Tracking Status

For readability, the report layout displays on the next page.

2.8.162.3 Provider AR On Hold for Status Code B C J U W-Z Layout

```
Report  : FIN-8062-W                          COMMONWEALTH OF KENTUCKY                          Run Date: MM/DD/CCYY
Process : FINJW862                       MEDICAID MANAGEMENT INFORMATION SYSTEM                 Run Time:   99:99:99
Location: FINP8062                    PROVIDER AR ON HOLD FOR STATUS CODE B C J U W-Z              Page:       9999
                                                 MM/DD/CCYY - MM/DD/CCYY


                                                 BY PROVIDER TYPE/STATUS
TYPE  PROVIDER  STAT CD  SETUP DATE        AMT REQ         BALANCE              A/R TCN
 99 9999999999     X    MM/DD/CCYY    99,999,999.99   99,999,999.99       99999999999999999
 99 9999999999     X    MM/DD/CCYY    99,999,999.99   99,999,999.99       99999999999999999
 99 9999999999     X    MM/DD/CCYY    99,999,999.99   99,999,999.99       99999999999999999
 99 9999999999     X    MM/DD/CCYY    99,999,999.99   99,999,999.99       99999999999999999
 99 9999999999     X    MM/DD/CCYY    99,999,999.99   99,999,999.99       99999999999999999
 99 9999999999     X    MM/DD/CCYY    99,999,999.99   99,999,999.99       99999999999999999
STATUS CODE SUBTOTALS               99,999,999.99   99,999,999.99

 99 9999999999     X    MM/DD/CCYY    99,999,999.99   99,999,999.99       99999999999999999
 99 9999999999     X    MM/DD/CCYY    99,999,999.99   99,999,999.99       99999999999999999
 99 9999999999     X    MM/DD/CCYY    99,999,999.99   99,999,999.99       99999999999999999
 99 9999999999     X    MM/DD/CCYY    99,999,999.99   99,999,999.99       99999999999999999
STATUS CODE SUBTOTALS               99,999,999.99   99,999,999.99

99 PROVIDER TYPE SUBTOTALS           21,500.00          17,500.00
```

```
Report  : FIN-8062-W                          COMMONWEALTH OF KENTUCKY                          Run Date: MM/DD/CCYY
Process : FINJW862                       MEDICAID MANAGEMENT INFORMATION SYSTEM                 Run Time:   99:99:99
Location: FINP8062                    PROVIDER AR ON HOLD FOR STATUS CODE B C J U W-Z              Page:       9999
                                                 MM/DD/CCYY - MM/DD/CCYY


                                                 BY PROVIDER TYPE/STATUS
                                       AMT REQ           BALANCE

STATUS B TOTALS                   99,999,999.99     99,999,999.99
STATUS C TOTALS                   99,999,999.99     99,999,999.99
STATUS J TOTALS                   99,999,999.99     99,999,999.99
STATUS U TOTALS                   99,999,999.99     99,999,999.99
STATUS W TOTALS                   99,999,999.99     99,999,999.99
STATUS X TOTALS                   99,999,999.99     99,999,999.99
STATUS Y TOTALS                   99,999,999.99     99,999,999.99
STATUS Z TOTALS                   99,999,999.99     99,999,999.99

REPORT TOTAL                      99,999,999.99     99,999,999.99
```

2.8.162.4 Field Descriptions

Field	Description	Length	Data Type	DB Table	DB Attributes
A/R NUMBER	A/R ICN from A/R record	13	Number	T_ACCT_REC	SAK_ACCT_REC
ADJ RSN	AR reason codes	2	Character	N/A	N/A
Amt Req	Amount requested on the A/R record	13	Number	T_ACCT_REC	SETUP_AMT
Balance	Calculated from fields on the A/R record	13	Number	N/A	Calculated Field
LOC	Location of requesting department for the hold	2	Character	N/A	N/A
Provider	Provider number on the A/R record	10	Number	T_PR_IDENTIFIER	ID_PROVIDER
Provider Type Subtotal	Subtotal of Provider type calculated while reporting	13	Number	N/A	Calculated Field
Report Total	Total for the report calculated	13	Number	N/A	Calculated Field
Setup Date	Setup Date on the A/R record	10	Number	T_ACCT_REC	DTE_AR_LIABILITY
Status B Totals	Total of all Status B (HOLD RECOUP-PP UNDER CONSTRUCTION)while reporting	13	Number	N/A	Calculated Field
Status C Totals	Total of all Status C (HOLD)while reporting	13	Number	N/A	Calculated Field
Status Code Subtotal	Total of all Status Codes calculated while reporting	13	Number	N/A	Calculated Field
Status J Totals	Total for all Status J (HOLD RECOUP-REFUND) while reporting	13	Number	N/A	Calculated Field
Status U Totals	Total of all Status U (FISCAL AGENT HOLD) while reporting	13	Number	N/A	Calculated Field
Status W Totals	Total of all Status W (FURTHER REVIEW)while reporting	13	Number	N/A	Calculated Field
Status X Totals	Total of all Status X (BANKRUPTCY) while reporting	13	Number	N/A	Calculated Field

Field	Description	Length	Data Type	DB Table	DB Attributes
Status Y Totals	Total of all Status Y (APPEAL) while reporting	13	Number	N/A	Calculated Field
Status Z Totals	Total of all Status Z (RESOLUTION HEARING) while reporting	13	Number	N/A	Calculated Field
TRK STAT	Status Code on the A/R record	1	Date (MM/DD/CCYY)	T_ACCT_REC	CDE_DISP_REASON
Type	The provider type code	2	Number	T_PT_PROV_TYPE	PROV_TYPE

2.8.162.5 Associated Programs

Program	Description
finp8062	Provider AR On Hold for Status Code B C J U W-Z

2.8.162.6 Associated Requirements

ID
30.090.009.003.1

2.8.162.7 Change Orders

ID	Name	Description
1146	create FIN-8062-W	Create the Legacy KYMC8060-R002 Provider AR on hold for Status Code B, C, J, U, W-Z report
4600	Provider AR Status Code	#1 - Failed-PWB does not have the word "Period" in the fourth line of the main heading, while the OnBase report has the word "Period" preceding the dates.

2.8.163 FIN-8065-W -- Weekly AR Outstanding Balances Over 270 Days

Reports all outstanding A/R balances that are over 270 days from the original setup date.

2.8.163.1 Technical Name

FIN-8065-W

2.8.163.2 Sort Order

Provider Number

Setup Date

Date Added

For readability, the report layout displays on the next page.

2.8.163.3 Weekly AR Outstanding Balances Over 270 Days Layout

```
Report   : FIN-8065-W                    COMMONWEALTH OF KENTUCKY                    Run Date: MM/DD/CCYY
Process  : FINJW865                 MEDICAID MANAGEMENT INFORMATION SYSTEM           Run Time:   99:99:99
Location: FINP8065               WEEKLY AR OUTSTANDING BALANCES OVER 270 DAYS             Page:       9999
                                          MM/DD/CCYY - MM/DD/CCYY

PROVIDER   PROVIDER                                ORIGINAL        CURRENT   SETUP    REASON   STATUS   LOC  PMT PLAN
NUMBER     NAME                                     BALANCE        BALANCE   DATE       CODE     CODE   CODE      IND
9999999999 XXXXXXXXXXXXXXXXXXXX                 99,999,999.99  99,999,999.99  MM/DD/CCYY XXXX       X      XX        X

           SUB TOTAL                            99,999,999.99  99,999,999.99

           PROVIDER TOTAL                       99,999,999.99  99,999,999.99

9999999999 XXXXXXXXXXXXXXXXXXXX                 99,999,999.99  99,999,999.99  MM/DD/CCYY XXXX       X      XX        X

           SUB TOTAL                            99,999,999.99  99,999,999.99

           PROVIDER TOTAL                       99,999,999.99  99,999,999.99

9999999999 XXXXXXXXXXXXXXXXXXXX                 99,999,999.99  99,999,999.99  MM/DD/CCYY XXXX       X      XX        X

           SUB TOTAL                            99,999,999.99  99,999,999.99

           PROVIDER TOTAL                       99,999,999.99  99,999,999.99

           GRAND TOTALS                         99,999,999.99  99,999,999.99

                                       TOTAL PROVIDERS              999999
                                       ****  END OF REPORT ****
```

2.8.163.4 Field Descriptions

Field	Description	Length	Data Type	DB Table	DB Attributes
Current Balance	The current balance of the A/R.	13	Number	N/A	Calculated Field
Grand Total	The totals for all providers reported	13	Number	N/A	Calculated Field
Loc Code	A two-digit code indicating the DMS department originating the A/R transaction, or the fiscal agent.	2	Character	T_ACCT_REC	CDE_UNIT_DEPT
Original Balance	The original balance of the A/R.	13	Number	T_ACCT_REC	AMT_SETUP

Field	Description	Length	Data Type	DB Table	DB Attributes
Pmt Plan Ind	The payment plan indicator is set to 'P' if a payment plan exists for the A/R.	1	Character	T_AR_PAYMENT_PLAN	NUM_CONTROL_AR
Provider Name	The name of the provider.	25	Character	T_PR_NAM	NAME
Provider Number	The Medicaid Provider Number of the provider having an outstanding A/R balance.	10	Number	T_PR_IDENTIFIER	ID_PROVIDER
Provider Total	The total of all the provider's outstanding accounts receivable that is greater than 270 days old.	13	Number	N/A	Calculated Field
Reason Code	The Adjustment Reason Code for the A/R.	4	Character	T_ACCT_REC	CDE_REASON_FOUR
Setup Date	The date the A/R was set up.	10	Date (MM/DD/CCYY)	T_ACCT_REC	DTE_AR_LIABILITY
Status Code	The status of the A/R.	1	Character	T_ACCT_REC	CDE_DISP_REASON
Sub Total	the subtotal of the provider's outstanding accounts receivable.	13	Number	N/A	Calculated Field

2.8.163.5 Associated Programs

Program	Description
finp8065	Weekly AR Outstanding Balances Over 270 Days

2.8.163.6 Associated Requirements

ID
30.090.009.003.1

2.8.163.7 Change Orders

ID	Name	Description
1147	Create FIN-8065-W 270 past due	create the legacy KYMC8065-R001 Weekly AR outstanding balances over 270 days report.

2.8.164 FIN-8071-M -- Monthly Recoupment Status - Reason Code 46 and CB

Reports recoupments processed for providers having recoupment balances for reason code 46 or CB - CDR Hospitals Aut.

SORT GROUP BY NUM_CONTROL_AR, PR.SAK_FIN_PERIOD, AR.SAK_PAYEE, AR.DTE_AR_LIABILITY, AR.DTE_ADDED, ID_PROV_PRIMARY, DTE_PERIOD_END, DTE_PERIOD-EFF

2.8.164.1 Technical Name

FIN-8071-M

2.8.164.2 Sort Order

Provider Number

For readability, the report layout displays on the next page.

2.8.164.3 Monthly Recoupment Status - Reason Code 46 and CB Layout

```
Report  : FIN-8071-M                    COMMONWEALTH OF KENTUCKY                    Run Date: MM/DD/CCYY
Process : FINJW871                  MEDICAID MANAGEMENT INFORMATION SYSTEM          Run Time:   99:99:99
Location: FINP8071              MONTHLY RECOUPMENT STATUS - REASON CODE 46 AND CB       Page:       9999

                                CYCLE # ..   FOR SETUP DATE : FROM MM/DD/CCYY THRU MM/DD/CCYY
PROVIDER          ORINGINAL AMOUNT          SETUP          TOTAL            TOTAL            TOT RECOUPED      REMAINDER TO
NUMBER            IDENTIFIED                DATE           TO BE RECOUPED   RECOUPED MONTH        TO DATE       BE RECOUPED

9999999999          99,999,999.99         MM/DD/CCYY       99,999,999.99    99,999,999.99   99,999,999.99    99,999,999.99
9999999999          99,999,999.99         MM/DD/CCYY       99,999,999.99    99,999,999.99   99,999,999.99    99,999,999.99
9999999999          99,999,999.99         MM/DD/CCYY       99,999,999.99    99,999,999.99   99,999,999.99    99,999,999.99
9999999999          99,999,999.99         MM/DD/CCYY       99,999,999.99    99,999,999.99   99,999,999.99    99,999,999.99
9999999999          99,999,999.99         MM/DD/CCYY       99,999,999.99    99,999,999.99   99,999,999.99    99,999,999.99
9999999999          99,999,999.99         MM/DD/CCYY       99,999,999.99    99,999,999.99   99,999,999.99    99,999,999.99

                                          CYCLE TOTAL      99,999,999.99    99,999,999.99   99,999,999.99    99,999,999.99

                                CYCLE # ..   FOR SETUP DATE : FROM MM/DD/CCYY THRU MM/DD/CCYY
PROVIDER          ORINGINAL AMOUNT          SETUP          TOTAL            TOTAL            TOT RECOUPED      REMAINDER TO
NUMBER            IDENTIFIED                DATE           TO BE RECOUPED   RECOUPED MONTH        TO DATE       BE RECOUPED

9999999999          99,999,999.99         MM/DD/CCYY       99,999,999.99    99,999,999.99   99,999,999.99    99,999,999.99
9999999999          99,999,999.99         MM/DD/CCYY       99,999,999.99    99,999,999.99   99,999,999.99    99,999,999.99
9999999999          99,999,999.99         MM/DD/CCYY       99,999,999.99    99,999,999.99   99,999,999.99    99,999,999.99
9999999999          99,999,999.99         MM/DD/CCYY       99,999,999.99    99,999,999.99   99,999,999.99    99,999,999.99
9999999999          99,999,999.99         MM/DD/CCYY       99,999,999.99    99,999,999.99   99,999,999.99    99,999,999.99
9999999999          99,999,999.99         MM/DD/CCYY       99,999,999.99    99,999,999.99   99,999,999.99    99,999,999.99

                                          CYCLE TOTAL      99,999,999.99    99,999,999.99   99,999,999.99    99,999,999.99

                                          GRAND TOTAL      99,999,999.99    99,999,999.99   99,999,999.99    99,999,999.99
                                          ***  NO RECOUPMENTS THIS WEEK ***
                                          TOTAL PROVIDERS              99999
                                          ****  END OF REPORT ****
```

2.8.164.4 Field Descriptions

Field	Description	Length	Data Type	DB Table	DB Attributes
Cycle #	The cycle being reported.	4	Character	N/A	N/A
Cycle Total	The column totals of all recoupment balances reported for the cycle.	13	Number	N/A	Calculated Field

Field	Description	Length	Data Type	DB Table	DB Attributes
For Setup Date	The date span represented by the cycle number. All recoupment balances set up between these days are reported in the current cycle number.	20	Date (MM/DD/CCYY)	N/A	N/A
Grand Total	The column totals of all recoupment balances reported for all cycles.	13	Number	N/A	Calculated Field
Original Amount Identified	The original amount to be recouped	13	Number	T_ACCT_REC	AMT_SETUP
Provider Number	The Medicaid provider ID of the provider having the recoupment balance.	10	Number	T_PR_IDENTIFIER	ID_PROVIDER
Remainder To Be Recouped	The balance still remaining.	13	Number	N/A	Calculated Field
Setup Date	The date the recoupment balance was set up.	10	Date (MM/DD/CCYY)	T_ACCT_REC	DTE_AR_LIABILITY
Total	The column totals for all recoupment balances for the provider.	13	Number	N/A	Calculated Field
Total Providers	The total number of providers appearing on the report.	11	Number	N/A	Calculated Field
Total Recouped Month	The total amount that has been recouped during the month being reported.	13	Number	N/A	Calculated Field
Total Recouped To Date	The total amount that has been recouped to date.	13	Number	N/A	Calculated Field
Total To Be Recouped	The amount set up for recoupment.	13	Number	N/A	Calculated Field

2.8.164.5 Associated Programs

Program	Description
finp8071	Monthly Recoupment Status - Reason Code 46 and CB

2.8.164.6 Associated Requirements

ID
30.090.009.002.34

2.8.164.7 Change Orders

ID	Name	Description
1152	create cont recoup status by rsn	Create the legacy KYMC8071-R001, KYMC8076-R001, KYMC8077-R001, KYMC8082-R001, KYMC8083 monthly recoupment status - reason code reports.
8036	FIN-8071-M	Entered an A/R with a Reason code of CB for the 8071 report and it did not appear on the report.

2.8.165 FIN-8072-M -- Contractor Recoupment Payouts For PCG

Lists complete payouts generated during the current month for PCG cycles.

2.8.165.1 Technical Name

FIN-8072-M

2.8.165.2 Sort Order

Provider Number

2.8.165.3 Contractor Recoupment Payouts For PCG Layout

```
Report  : FIN-8072-M                          COMMONWEALTH OF KENTUCKY                          Run Date: MM/DD/CCYY
Process : FINJM872                      MEDICAID MANAGEMENT INFORMATION SYSTEM                  Run Time:   99:99:99
Location: FINP8072                       CONTRACTOR RECOUPMENT PAYOUTS FOR PCG                      Page:       9999
                                                  MM/DD/CCYY - MM/DD/CCYY

PROVIDER    PROVIDER                                        SETUP       PAYOUT              PAYOUT
NUMBER      NAME                                            DATE        DATE                AMOUNT        COMMENT
----------  ----------------------------------------------  ----------  ----------  ---------------  ------------------------------

9999999999  XXXXXXXXXXXXXXXXXXXXXXXXXXXXXXXXXXXXXXXXXXXX    MM/DD/CCYY  MM/DD/CCYY     99,999,999.99  XXXXXXXXXXXXXXXXXXXXXXXXXXXXX
                                                            ** TOTAL **                 99,999,999.99

9999999999  XXXXXXXXXXXXXXXXXXXXXXXXXXXXXXXXXXXXXXXXXXXX    MM/DD/CCYY  MM/DD/CCYY     99,999,999.99  XXXXXXXXXXXXXXXXXXXXXXXXXXXXX
                                                            ** TOTAL **                 99,999,999.99

9999999999  XXXXXXXXXXXXXXXXXXXXXXXXXXXXXXXXXXXXXXXXXXXX    MM/DD/CCYY  MM/DD/CCYY     99,999,999.99  XXXXXXXXXXXXXXXXXXXXXXXXXXXXX
                                                            ** TOTAL **                 99,999,999.99

9999999999  XXXXXXXXXXXXXXXXXXXXXXXXXXXXXXXXXXXXXXXXXXXX    MM/DD/CCYY  MM/DD/CCYY     99,999,999.99  XXXXXXXXXXXXXXXXXXXXXXXXXXXXX
                                                            ** TOTAL **                 99,999,999.99

                                                            ** GRAND TOTAL **            99,999,999.99
                                                TOTAL PROVIDERS              9999
                                                ****  END OF REPORT ****
```

2.8.165.4 Field Descriptions

Field	Description	Length	Data Type	DB Table	DB Attributes
AS OF	The cycle date for which the report was produced.	10	Date (MM/DD/CCYY)	N/A	N/A
Comment	Comments of the payout.	15	Character	T_AR_COMMENTS	DSC_LONG

Field	Description	Length	Data Type	DB Table	DB Attributes
For The Period	The date span covering the current month specified by the parm input dates. All summary records with complete payout status and comments containing literals PCG between these days are reported.	10	Date (MM/DD/CCYY)	N/A	N/A
Grand Total	The column totals of all payouts reported for the provider.	13	Number	N/A	Calculated Field
Payout Amount	The amount of the payout.	13	Number	T_EXPENDITURE	AMT_PAID
Payout Date	The date the payout was made.	10	Date (MM/DD/CCYY)	T_EXPENDITURE	DTE_PAYMENT_ISSUE
Provider Name	The name of the provider.	30	Character	T_PR_NAM	NAME
Provider Number	The Medicaid provider ID of the provider.	10	Number	T_PR_IDENTIFIER	ID_PROVIDER
Setup Date	The date the payout was set up.	10	Date (MM/DD/CCYY)	T_ACCT_REC	DTE_AR_LIABILITY
Total	The column totals of all payouts reported for the provider.	13	Number	N/A	Calculated Field
Total Providers	The total number of providers appearing on the report.	4	Number	N/A	Calculated Field

2.8.165.5 Associated Programs

Program	Description
finp8072	Contractor Recoupment Payouts For PCG

2.8.165.6 Associated Requirements

ID
30.090.009.002.34

2.8.165.7 Change Orders

ID	Name	Description
1153	create FIN-8072-M recoup payout	Create the Legacy KYMC8072-R002 contractor Recoupment Payouts for PCG

2.8.166 FIN-8076-M -- Monthly Recoupment Status - Reason Code 49 and AA

Reports recoupments processed for providers having recoupment balances for reason code 49 or AA - TPL Contractor.

2.8.166.1 Technical Name

FIN-8076-M

2.8.166.2 Sort Order

Period Date

Provider Number

For readability, the report layout displays on the next page.

2.8.166.3 Monthly Recoupment Status - Reason Code 49 and AA Layout

```
Report  : FIN-8076-M                          COMMONWEALTH OF KENTUCKY                          Run Date: MM/DD/CCYY
Process : FINJM876                       MEDICAID MANAGEMENT INFORMATION SYSTEM                 Run Time:   99:99:99
Location: FINP8076                  MONTHLY RECOUPMENT STATUS - REASON CODE 49 AND AA                Page:       9999

                                   CYCLE # ..   FOR SETUP DATE : FROM MM/DD/CCYY THRU MM/DD/CCYY
PROVIDER          ORINGINAL AMOUNT          SETUP          TOTAL             TOTAL              TOT RECOUPED      REMAINDER TO
NUMBER            IDENTIFIED                DATE           TO BE RECOUPED    RECOUPED MONTH          TO DATE       BE RECOUPED

9999999999          99,999,999.99        MM/DD/CCYY        99,999,999.99     99,999,999.99    99,999,999.99     99,999,999.99
9999999999          99,999,999.99        MM/DD/CCYY        99,999,999.99     99,999,999.99    99,999,999.99     99,999,999.99
9999999999          99,999,999.99        MM/DD/CCYY        99,999,999.99     99,999,999.99    99,999,999.99     99,999,999.99
9999999999          99,999,999.99        MM/DD/CCYY        99,999,999.99     99,999,999.99    99,999,999.99     99,999,999.99
9999999999          99,999,999.99        MM/DD/CCYY        99,999,999.99     99,999,999.99    99,999,999.99     99,999,999.99
9999999999          99,999,999.99        MM/DD/CCYY        99,999,999.99     99,999,999.99    99,999,999.99     99,999,999.99

                                            CYCLE TOTAL    99,999,999.99     99,999,999.99    99,999,999.99     99,999,999.99

                                   CYCLE # ..   FOR SETUP DATE : FROM MM/DD/CCYY THRU MM/DD/CCYY
PROVIDER          ORINGINAL AMOUNT          SETUP          TOTAL             TOTAL              TOT RECOUPED      REMAINDER TO
NUMBER            IDENTIFIED                DATE           TO BE RECOUPED    RECOUPED MONTH          TO DATE       BE RECOUPED

9999999999          99,999,999.99        MM/DD/CCYY        99,999,999.99     99,999,999.99    99,999,999.99     99,999,999.99
9999999999          99,999,999.99        MM/DD/CCYY        99,999,999.99     99,999,999.99    99,999,999.99     99,999,999.99
9999999999          99,999,999.99        MM/DD/CCYY        99,999,999.99     99,999,999.99    99,999,999.99     99,999,999.99
9999999999          99,999,999.99        MM/DD/CCYY        99,999,999.99     99,999,999.99    99,999,999.99     99,999,999.99
9999999999          99,999,999.99        MM/DD/CCYY        99,999,999.99     99,999,999.99    99,999,999.99     99,999,999.99
9999999999          99,999,999.99        MM/DD/CCYY        99,999,999.99     99,999,999.99    99,999,999.99     99,999,999.99

                                            CYCLE TOTAL    99,999,999.99     99,999,999.99    99,999,999.99     99,999,999.99

                                            GRAND TOTAL    99,999,999.99     99,999,999.99    99,999,999.99     99,999,999.99
                                            ***  NO RECOUPMENTS THIS WEEK ***
                                            TOTAL PROVIDERS              99999
                                            ****  END OF REPORT ****
```

2.8.166.4 Field Descriptions

Field	Description	Length	Data Type	DB Table	DB Attributes
Cycle #	The cycle being reported.	4	Character	N/A	N/A
Cycle Total	The column totals of all recoupment balances reported for the cycle.	13	Number	N/A	Calculated Field

Field	Description	Length	Data Type	DB Table	DB Attributes
For Setup Date	The date span represented by the cycle number. All recoupment balances set up between these dates are reported in the current cycle number.	20	Date (MM/DD/CCYY)	N/A	N/A
Grand Total	The column totals of all recoupment balances reported for all cycles	13	Number	N/A	Calculated Field
Original Amount Identified	The original set up amount for recoupment.	13	Number	T_ACCT_REC	AMT_SETUP
Provider Name	The name of the Provider.	30	Character	T_PR_NAM	NAME
Provider Number	The Medicaid provider ID of the provider having the recoupment balance.	10	Number	T_PR_IDENTIFIER	ID_PROVIDER
Remaining To Be Recouped	The balance still remaining.	13	Number	N/A	Calculated Field
Setup Date	The date the recoupment balance was set up.	10	Date (MM/DD/CCYY)	T_ACCT_REC	DTE_AR_LIABILITY
Tot Recouped To Date	The total amount that has been recouped to date.	13	Number	N/A	Calculated Field
Total	The column totals for all recoupment balances for the provider.	13	Number	N/A	Calculated Field
Total Providers	The total number of providers appearing on the report.	4	Number	N/A	Calculated Field
Total Recouped Month	The total amount that has been recouped during the month being reported.	13	Number	N/A	Calculated Field
Total To Be Recouped	The amount set up for recoupment.	13	Number	T_ACCT_REC	AMT_SETUP

2.8.166.5 Associated Programs

Program	Description
finp8076	Monthly Recoupment Status - Reason Code 49 and AA

2.8.166.6 Associated Requirements

ID
30.090.009.002.34

2.8.166.7 Change Orders

ID	Name	Description
1152	create cont recoup status by rsn	Create the legacy KYMC8071-R001, KYMC8076-R001, KYMC8077-R001, KYMC8082-R001, KYMC8083 monthly recoupment status - reason code reports.

2.8.167 FIN-8077-M -- AR Member Fraud Collections (CODE 77)

Reports receipts processed for recipients having received balances for all reason codes. This was written for the A/R Recipient Intentional Program Violation. This report is sorted by recipient number within reason code, with a subtotal for the reason code and an overall report total. **Currently the only Reason code set up for A/R Recipient Intentional Program Violation is Reason code 77.

SORT GROUP BY: NUM_CONTROL_AR, SAK_FIN_PERIOD, SAK_PAYEE, DTE_AR_LIABILITY, DTE_ADDED, ID_MEDICAID, NAM_FIRST, NAM_LAST, DTE_PERIOD_END, DTE_PERIOD_EFF,

2.8.167.1 Technical Name

FIN-8077-M

2.8.167.2 Sort Order

Period Date

Member Number

2.8.167.3 AR Member Fraud Collections (CODE 77) Layout

```
Report  : FIN-8077-M                          COMMONWEALTH OF KENTUCKY                          Run Date: MM/DD/CCYY
Process : FINJM877                     MEDICAID MANAGEMENT INFORMATION SYSTEM                   Run Time:   99:99:99
Location: FINP8077                      AR MEMBER FRAUD COLLECTIONS (CODE 77)                       Page:       9999
                                                MM/DD/CCYY - MM/DD/CCYY

MEMBER     MEMBER                        SETUP        TOTAL            TOTAL             TOT RECEIVED     REMAINDER TO
NUMBER     NAME                          DATE         TO BE RECEIVED   RECEIVED MONTH         TO DATE      BE RECEIVED
999999999  XXXXXXXXXXXXXXXXXXXXXXXXX  MM/DD/CCYY     99,999,999.99    99,999,999.99    99,999,999.99    99,999,999.99
999999999  XXXXXXXXXXXXXXXXXXXXXXXXX  MM/DD/CCYY     99,999,999.99    99,999,999.99    99,999,999.99    99,999,999.99
999999999  XXXXXXXXXXXXXXXXXXXXXXXXX  MM/DD/CCYY     99,999,999.99    99,999,999.99    99,999,999.99    99,999,999.99

                                      GRAND TOTAL   99,999,999.99    99,999,999.99    99,999,999.99    99,999,999.99
                                              ***  NO RECEIPTS THIS WEEK    ***
                                              TOTAL MEMEBERS              0
                                              ****  END OF REPORT ****
```

2.8.167.4 Field Descriptions

Field	Description	Length	Data Type	DB Table	DB Attributes
For Setup Dates	The date span represented by the cycle number. All received balances set up between these days are reported in the current cycle number.	20	Date (MM/DD/CCYY)	N/A	N/A

Field	Description	Length	Data Type	DB Table	DB Attributes
Grand Total	The column totals of all received balances reported for all cycles.	13	Number	N/A	Calculated Field
Grand Total Year	The Current Balance for the Fiscal Year. (July-June)	13	Number	N/A	Calculated Field
Grand Total for 1st Quarter	The Current Balance the 1st quarter of the Fiscal Year.	13	Number	N/A	Calculated Field
Grand Total for 2nd Quarter	The Current Balance for the 2nd quarter of the Fiscal Year. (October-December)	13	Number	N/A	Calculated Field
Grand Total for 3rd Quarter	The Current Balance for the 3rd quarter of the Fiscal Year. (January-March)	13	Number	N/A	Calculated Field
Grand Total for 4th Quarter	The Current Balance for the 4th quarter of the Fiscal Year. (April-June)	13	Number	N/A	Calculated Field
Member Name	The name of the Member.	25	Character	T_RE_BASE	CONCATENATION
Member Number	The Medicaid Member ID of the Member having the received balance.	10	Number	T_RE_BASE	ID MEDICAID
Remainder To Be Received	The balance still remaining	13	Number	N/A	Calculated Field
Setup Date	The date the balance was set up.	10	Date (MM/DD/CCYY)	T_ACCT_REC	DTE_AR_LIABILITY
Tot Received To Date	The total amount that has been received to date.	13	Number	N/A	Calculated Field
Total	The column totals for all received balances for the provider	13	Number	N/A	Calculated Field
Total Members	The total number of members appearing on the report.	13	Number	N/A	Calculated Field
Total Received Month	The total amount that has been received during the month being reported.	13	Number	N/A	Calculated Field

Field	Description	Length	Data Type	DB Table	DB Attributes
Total To Be Received	The amount set up for receipt	13	Number	N/A	Calculated Field

2.8.167.5 Associated Programs

Program	Description
finp8077	AR Member Fraud Collections (CODE 77)

2.8.167.6 Associated Requirements

ID
30.090.009.002.34

2.8.167.7 Change Orders

ID	Name	Description
1152	create cont recoup status by rsn	Create the legacy KYMC8071-R001, KYMC8076-R001, KYMC8077-R001, KYMC8082-R001, KYMC8083 monthly recoupment status - reason code reports.

2.8.168 FIN-807E1-M -- Fraud and Abuse Contractor C - Monthly Recovered Status - Reason Code MS

Reports recoveries processed for providers having recovery balances for reason MS.Meyers and Stauffer Contractor C.

SORT GROUP BY: NUM_CONTROL_AR, ID_PROV_PRIMARY

2.8.168.1 Technical Name

FIN-807E1-M

2.8.168.2 Sort Order

Provider Number

2.8.168.3 Fraud and Abuse Contractor C - Monthly Recovered Status - Reason Code MS Layout

```
Report  : FIN-807E1-M                          COMMONWEALTH OF KENTUCKY                          Run Date: MM/DD/CCYY
Process : FINJM871                       MEDICAID MANAGEMENT INFORMATION SYSTEM                  Run Time:   99:99:99
Location: FINP807E1                    MONTHLY RECOVERED STATUS - REASON CODE MS                     Page:       9999
                                                 MM/DD/CCYY - MM/DD/CCYY

PROVIDER   PROVIDER                      TOTAL                TOTAL RECOVERED  TOTAL RECOVERED    TOT RECOVERED     REMAINDER TO
NUMBER     NAME                          TO BE RECOVERED      FOR MONTH-CHECKS FOR MONTH-RECOUPS  FOR MONTH          BE RECOVERED
9999999999 XXXXXXXXXXXXXXXXXXXXXXXXXXXX   99,999,999.99          99,999,999.99     99,999,999.99  99,999,999.99     99,999,999.99
                                         99,999,999.99          99,999,999.99     99,999,999.99  99,999,999.99     99,999,999.99
                             ** TOTAL ** 99,999,999.99          99,999,999.99     99,999,999.99  99,999,999.99     99,999,999.99

9999999999 XXXXXXXXXXXXXXXXXXXXXXXXXXXX   99,999,999.99          99,999,999.99     99,999,999.99  99,999,999.99     99,999,999.99
                                         99,999,999.99          99,999,999.99     99,999,999.99  99,999,999.99     99,999,999.99
                             ** TOTAL ** 99,999,999.99          99,999,999.99     99,999,999.99  99,999,999.99     99,999,999.99

9999999999 XXXXXXXXXXXXXXXXXXXXXXXXXXXX   99,999,999.99          99,999,999.99     99,999,999.99  99,999,999.99     99,999,999.99
                                         99,999,999.99          99,999,999.99     99,999,999.99  99,999,999.99     99,999,999.99
                             ** TOTAL ** 99,999,999.99          99,999,999.99     99,999,999.99  99,999,999.99     99,999,999.99

                             GRAND TOATL 99,999,999.99          99,999,999.99     99,999,999.99  99,999,999.99     99,999,999.99
                                                 TOTAL PROVIDERS    9999
```

2.8.168.4 Field Descriptions

Field	Description	Length	Data Type	DB Table	DB Attributes
Grand Total	The column totals of all payouts reported for the provider.	13	Number	N/A	Calculated Field

Field	Description	Length	Data Type	DB Table	DB Attributes
Provider Name	The name of the provider.	30	Character	T_PR_NAM	NAME
Provider Number	The Medicaid provider ID of the provider having the recovery balance.	10	Number	T_PR_IDENTIFIER	ID_PROVIDER
Remainder To Be Recovered	The balance still remaining.	13	Number	N/A	Calculated Field
Tot Recovered For Month	The total amount that has been recovered during the month being recovered.	13	Number	N/A	Calculated Field
Total	The column totals for all recovery balances for the provider.	13	Number	N/A	Calculated Field
Total Providers	The total number of providers appearing on the report.	13	Number	N/A	Calculated Field
Total Recovered For Month-Checks	The total amount that has been recovered during the month for checks.	13	Number	N/A	Calculated Field
Total Recovered For Month-Recoups	The total amount that has been recovered during the month for recoupments.	13	Number	N/A	Calculated Field
Total To Be Recovered	The amount set up for recovery	13	Number	T_ACCT_REC	AMT_SETUP

2.8.168.5 Associated Programs

Program	Description
finp807e1	Fraud and Abuse Contractor C - Monthly Recovered Status - Reason Code MS

2.8.168.6 Associated Requirements

ID
30.090.009.002.34

2.8.168.7 Change Orders

ID	Name	Description
1148	create FIN-807E-M recovery MS	Create the Legacy KYMC807E-R001 Monthly Recovery status -Reason code MS report.

2.8.169 FIN-807E2-M -- Total Recovered For The Month Non - Lock Box Myers and Stauffer Checks

Reports recoveries processed for providers having recovery balances for reason MS.Fraud & Abuse Contractor B for non-lock box Meyers and Stauffer checks (CCN batch ranges other than 56-60).

SORT GROUP BY: ID_PROV_PRIMARY

2.8.169.1 Technical Name

FIN-807E2-M

2.8.169.2 Sort Order

Provider Number

2.8.169.3 Total Recovered For The Month Non - Lock Box Myers and Stauffer Checks Layout

```
Report  : FIN-807E2-M                          COMMONWEALTH OF KENTUCKY                          Run Date: MM/DD/CCYY
Process : FINJM87E                       MEDICAID MANAGEMENT INFORMATION SYSTEM                  Run Time:   99:99:99
Location: FINP807E2            TOTAL RECOVERED FOR THE MONTH NON-LOCK BOX MYERS AND STAUFFER     Page:       9999
                                                MM/DD/CCYY - MM/DD/CCYY

PROVIDER   PROVIDER                      DATE RECVD/      RECOVERED AMOUNT        CCN
NUMBER     NAME
9999999999 XXXXXXX XXXXXXXXX XXXXXXXX    MM/DD/CCYY          99,999,999.99      XXXXXXXXXXXXX
9999999999 XXXXXXX XXXXXXXXX XXXXXXXX    MM/DD/CCYY          99,999,999.99      XXXXXXXXXXXXX
9999999999 XXXXXXX XXXXXXXXX XXXXXXXX    MM/DD/CCYY          99,999,999.99      XXXXXXXXXXXXX
9999999999 XXXXXXX XXXXXXXXX XXXXXXXX    MM/DD/CCYY          99,999,999.99      XXXXXXXXXXXXX
9999999999 XXXXXXX XXXXXXXXX XXXXXXXX    MM/DD/CCYY          99,999,999.99      XXXXXXXXXXXXX
                                               ** TOTAL **   99,999,999.99

9999999999 XXXXXXX XXXXXXXXX XXXXXXXX    MM/DD/CCYY          99,999,999.99      XXXXXXXXXXXXX
9999999999 XXXXXXX XXXXXXXXX XXXXXXXX    MM/DD/CCYY          99,999,999.99      XXXXXXXXXXXXX
9999999999 XXXXXXX XXXXXXXXX XXXXXXXX    MM/DD/CCYY          99,999,999.99      XXXXXXXXXXXXX
9999999999 XXXXXXX XXXXXXXXX XXXXXXXX    MM/DD/CCYY          99,999,999.99      XXXXXXXXXXXXX
9999999999 XXXXXXX XXXXXXXXX XXXXXXXX    MM/DD/CCYY          99,999,999.99      XXXXXXXXXXXXX
                                               ** TOTAL **   99,999,999.99

                                               GRAND TOTAL   99,999,999.99
```

2.8.169.4 Field Descriptions

Field	Description	Length	Data Type	DB Table	DB Attributes
CCN	The CCN that was applied.	13	Number	T_CASH_RECEIPT	SAK_CASH_RECEIPT
Date Of Letter	The date the check was received.	10	Date (MM/DD/CCYY)	T_ACCT_REC	DTE_AR_LIABILITY

Field	Description	Length	Data Type	DB Table	DB Attributes
Grand Total	The column totals of all recoveries reported for the provider.	13	Number		Calculated Field
Provider Name	The name of the provider.	30	Character	T_PR_NAM	NAME
Provider Number	The Medicaid provider ID of the provider having the recovery balance.	10	Number	T_PR_IDENTIFIER	ID_PROVIDER
Recovered Amount	The amount that was recovered or adjusted.	13	Number		Calculated Field
Total	The column totals for all recovery balances for the provider.	13	Number		Calculated Field

2.8.169.5 Associated Programs

Program	Description
finp807e2	Total Recovered For The Month Non - Lock Box Myers and Stauffer Checks

2.8.169.6 Associated Requirements

ID
30.090.009.002.34

2.8.169.7 Change Orders

ID	Name	Description
1149	Create FIN-807E-M Non Lockbox	Create the Legacy KYMC807E-R002 Total Recovered for the month Non-Lock Box Meyers and Stauffer report.
1221	Changes to CASH tracking	The Cash system needs to be enhanced to track disp for FFP reporting.

2.8.170 FIN-807I-M -- Monthly Generated Payout For Myers and Stauffer

List complete payouts generated during the current month for Meyers and Stauffer.

2.8.170.1 Technical Name

FIN-807I-M

2.8.170.2 Sort Order

Provider Number

For readability, the report layout displays on the next page.

2.8.170.3 Monthly Generated Payout For Myers and Stauffer Layout

```
Report  : FIN-807I-M                    COMMONWEALTH OF KENTUCKY                    Run Date: MM/DD/CCYY
Process : FINJM87I                MEDICAID MANAGEMENT INFORMATION SYSTEM            Run Time:   99:99:99
Location: FINP807I             MONTHLY GENERATED PAYOUT FOR MYERS AND STAUFFER          Page:       9999
                                          MM/DD/CCYY - MM/DD/CCYY

   MYERS & STAUFFER PAYOUTS (PART A:  MYERS & STAUFFER PAYMENTS TIED TO A CCN)
PROVIDER    PROVIDER                  DECREASE      DATE OF    PAYOUT            PAYOUT
NUMBER      NAME                      AMOUNT        DECREASE    DATE             AMOUNT     CCN          COMMENT
-------------------------------------------------------------------------------------------------------------------

9999999999 XXXXXXXXXXXXXXXXXXXX      99,999,999.99- MM/DD/CCYY MM/DD/CCYY   99,999,999.99  9999999999999  MYERS & STAUFFER
9999999999 XXXXXXXXXXXXXXXXXXXX      99,999,999.99- MM/DD/CCYY MM/DD/CCYY   99,999,999.99  9999999999999  MYERS & STAUFFER
9999999999 XXXXXXXXXXXXXXXXXXXX      99,999,999.99- MM/DD/CCYY MM/DD/CCYY   99,999,999.99  9999999999999  MYERS & STAUFFER
9999999999 XXXXXXXXXXXXXXXXXXXX      99,999,999.99- MM/DD/CCYY MM/DD/CCYY   99,999,999.99  9999999999999  MYERS & STAUFFER
9999999999 XXXXXXXXXXXXXXXXXXXX      99,999,999.99- MM/DD/CCYY MM/DD/CCYY   99,999,999.99  9999999999999  MYERS & STAUFFER
9999999999 XXXXXXXXXXXXXXXXXXXX      99,999,999.99- MM/DD/CCYY MM/DD/CCYY   99,999,999.99  9999999999999  MYERS & STAUFFER
 ** TOTAL **                        99,999,999.99-                          99,999,999.99

 ** SUBTOTAL **                     99,999,999.99-                          99,999,999.99
   MYERS & STAUFFER PAYOUTS (PART B:  MYERS & STAUFFER PAYMENTS NOT TIED TO A CCN)
PROVIDER    PROVIDER                  DECREASE      DATE OF    PAYOUT            PAYOUT
NUMBER      NAME                      AMOUNT        DECREASE    DATE             AMOUNT     CCN          COMMENT
-------------------------------------------------------------------------------------------------------------------

9999999999 XXXXXXXXXXXXXXXXXXXX      99,999,999.99- MM/DD/CCYY MM/DD/CCYY   99,999,999.99  9999999999999  MYERS & STAUFFER
9999999999 XXXXXXXXXXXXXXXXXXXX      99,999,999.99- MM/DD/CCYY MM/DD/CCYY   99,999,999.99  9999999999999  MYERS & STAUFFER
9999999999 XXXXXXXXXXXXXXXXXXXX      99,999,999.99- MM/DD/CCYY MM/DD/CCYY   99,999,999.99  9999999999999  MYERS & STAUFFER
9999999999 XXXXXXXXXXXXXXXXXXXX      99,999,999.99- MM/DD/CCYY MM/DD/CCYY   99,999,999.99  9999999999999  MYERS & STAUFFER
9999999999 XXXXXXXXXXXXXXXXXXXX      99,999,999.99- MM/DD/CCYY MM/DD/CCYY   99,999,999.99  9999999999999  MYERS & STAUFFER
 ** TOTAL **                        99,999,999.99-                          99,999,999.99

 ** SUBTOTAL **                     99,999,999.99-                          99,999,999.99
```

2.8.170.4 Field Descriptions

Field	Description	Length	Data Type	DB Table	DB Attributes
CCN	Any CCN's associated with the payout, if found on the payout, or on the cross-referenced A/R	13	Number	T_CASH_RECEIPT	SAK_CASH_RECEIPT
Comment	Comments of the payout	15	Character	T_AR_COMMENTS	DSC_LONG
Cumulative Total	This is a total of all payouts from the beginning, thru the date of the report thru date	13	Number		Calculated Field

Field	Description	Length	Data Type	DB Table	DB Attributes
Decrease Amount	If the xref TCN exists on the payout, the decreases found within the cross-referenced A/R.	13	Number	T_ACCT_REC	AMT_SETUP
Decrease Date	The date of the decrease on the cross-referenced A/R	10	Date (MM/DD/CCYY)	T_ACCT_REC	DTE_ADDED
For Payout Dates	The date spans covering the current month specified by the parm input dates. All summary reports with complete payout status and comments containing literals Meyers with a payout date between these days are reported.	20	Date (MM/DD/CCYY)	N/A	N/A
HEADING PART A OR PART B	Two reports are generated Part A is payouts tied to a CCN and Part B is payouts not tied to a CCN.	0	Character	N/A	N/A
Monthly Total	The total of record appearing on the report	13	Number		Calculated Field
Payout Amount	The amount of the payout.	13	Number	T_EXPENDITURE	AMT_PAID
Payout Date	The date the payout was made.	10	Date (MM/DD/CCYY)	T_EXPENDITURE	DTE_PAYMENT_ISSUE
Provider Name	The name of the Provider	30	Character	T_PR_NAM	NAME
Provider Number	The Medicaid provider ID of the provider	10	Number	T_PR_IDENTIFIER	ID_PROVIDER
Subtotal	The column totals of all payouts reported within Part A/Part B	13	Number		Calculated Field
Total	The column totals of all payouts reported for the provider	13	Number		Calculated Field

2.8.170.5 Associated Programs

Program	Description
finp807i	Monthly Generated Payout For Myers and Stauffer

2.8.170.6 Associated Requirements

ID
30.090.009.002.34

2.8.170.7 Change Orders

ID	Name	Description
1150	Create FIN-807I AR payouts MS	Create the Legacy KYMC807I-R001Monthly report Unisys generated payout for Meyers and Stauffer.

2.8.171 FIN-8080-M -- Monthly Program Integrity Collections Report

List totals recovered from the accounts receivable, TPL, and Drug Rebate subsystems for selected reason/location codes. Give subtotals and grand totals as well. Create monthly, quarterly reports that both have yearly accumulated totals.

2.8.171.1 Technical Name

FIN-8080-M

2.8.171.2 Sort Order

N/A. Totals only.

For readability, this report layout appears on the next several pages.

2.8.171.3 Monthly Program Integrity Collections Report Layout

```
Report   : FIN-8080-M                    COMMONWEALTH OF KENTUCKY                    Run Date: MM/DD/CCYY
Process  : FINJM808                  MEDICAID MANAGEMENT INFORMATION SYSTEM          Run Time:   99:99:99
Location: FINP8080                 MONTHLY PROGRAM INTEGRITY COLLECTIONS REPORT          Page:       9999
                                          FOR THE MONTH OF XXXXXXXX CCYY

PART A:  MONTHLY TOTALS
-----------------------

UTILIZATION REVIEW BRANCH RECOVERIES

PROVIDERS ONLY

OFFICE INSPECTOR GENERAL (AC=13F)              $          0.00
ATTORNEY GENERAL (AC=13G)                      $          0.00
SAPIENT (FIRST CONTRACT) (AC=51)               $          0.00
HEALTHWATCH (SECOND CONTRACT) (AC=52)          $          0.00
MYERS & STAUFFER (THIRD CONTRACT) (AC=MS)      $          0.00
UTILIZATION REVIEW BRANCH (LOCATION CODE AG)   $          0.00
LAW ENFORCEMENT - STATE SHARE ONLY             $          0.00
PROVIDER INTEREST                              $          0.00
DATE OF DEATH RECOVERIES (DR)                  $          0.00
PROGRAM INTEGRITY (LOCATION CODE P)            $          0.00
                                              ----------------
PROVIDERS ONLY SUBTOTAL                        $          0.00
MEMBERS ONLY

MEMBER FRAUD (AC=77)                           $          0.00
MEMBER INTEREST                                $          0.00
                                              ----------------
MEMBER ONLY SUBTOTAL                           $          0.00

UTILIZATION REVIEW RECOVERY TOTAL              $          0.00

RECOVERY OPERATIONS BRANCH

TPL CONTRACTOR PCG COMMERCIAL INS RECOVERIES   $          0.00
TPL CONTRACTOR PCG2 COMMERCIAL INS RECOVERIES  $          0.00
TPL CONTRACTOR RECOUPMENT PART A RECOVERIES    $          0.00
TPL CONTRACTOR RECOUPMENT PART B RECOVERIES    $          0.00
CREDIT BALANCE RECOVERIES                      $          0.00
PCG BATCH RANGE 61 - 65 RECOVERIES             $          0.00
PCG2 BATCH RANGE 71 - 75 RECOVERIES            $          0.00
RECOVERY OPERATIONS (LOCATION CODE AH)         $          0.00
CASUALTY RECOVERIES                            $          0.00
NON-ATTORNEY CASUALTY RECOVERIES               $          0.00
ESTATE RECOVERIES                              $          0.00
CHILD SUPPORT RECOVERIES                       $          0.00
TRUST RECOVERIES                               $          0.00
MEDICARE PART A - COMMONWEALTH RECOUPMENTS     $          0.00
COMMONWEALTH INSURANCE RECOVERIES              $          0.00
DMS PROVIDER CLAIM CREDITS                     $          0.00
REGIONAL PSYCHIATRIC CROSSOVER REFUNDS         $          0.00
                                              ----------------
SUBTOTAL                                       $          0.00

PROVIDER INTEREST                              $          0.00
MEMBER INTEREST                                $          0.00
                                              ----------------
SUBTOTAL                                       $          0.00
RECOVERY OPERATIONS BRANCH TOTALS              $          0.00

DRUG REBATE CHECKS                             $          0.00
PROGRAM INTEGRITY (LOCATION CODE P)            $          0.00

COMBINED OVERALL GRAND TOTAL                   $          0.00
```

```
Report  : FIN-8080-M                    COMMONWEALTH OF KENTUCKY                    Run Date: MM/DD/CCYY
Process : FINJM808                 MEDICAID MANAGEMENT INFORMATION SYSTEM           Run Time:   99:99:99
Location: FINP8080                MONTHLY PROGRAM INTEGRITY COLLECTIONS REPORT          Page:       9999
                                        FOR THE MONTH OF XXXXXXXX CCYY

PART B:  QUARTERLY TOTAL
------------------------

UTILIZATION REVIEW BRANCH RECOVERIES

PROVIDERS ONLY

OFFICE INSPECTOR GENERAL (AC=13F)                $          0.00
ATTORNEY GENERAL (AC=13G)                        $          0.00
SAPIENT (FIRST CONTRACT) (AC=51)                 $          0.00
HEALTHWATCH (SECOND CONTRACT) (AC=52)            $          0.00
MYERS & STAUFFER (THIRD CONTRACT) (AC=M3)        $          0.00
UTILIZATION REVIEW BRANCH (LOCATION CODE AG)     $          0.00
LAW ENFORCEMENT - STATE SHARE ONLY               $          0.00
PROVIDER INTEREST                                $          0.00
DATE OF DEATH RECOVERIES (DR)                    $          0.00
PROGRAM INTEGRITY (LOCATION CODE P)              $          0.00
                                                 ----------------
PROVIDERS ONLY SUBTOTAL                          $          0.00

MEMBERS ONLY

MEMBER FRAUD (AC=77)                             $          0.00
MEMBER INTEREST                                  $          0.00
                                                 ----------------
MEMBER ONLY SUBTOTAL                             $          0.00

UTILIZATION REVIEW RECOVERY TOTAL                $          0.00

RECOVERY OPERATIONS BRANCH

TPL CONTRACTOR PCG COMMERCIAL INS RECOVERIES     $          0.00
TPL CONTRACTOR PCG2 COMMERCIAL INS RECOVERIES    $          0.00
TPL CONTRACTOR RECOUPMENT PART A RECOVERIES      $          0.00
TPL CONTRACTOR RECOUPMENT PART B RECOVERIES      $          0.00
CREDIT BALANCE RECOVERIES                        $          0.00
PCG BATCH RANGE 61 - 65 RECOVERIES               $          0.00
PCG2 BATCH RANGE 71 - 75 RECOVERIES              $          0.00
RECOVERY OPERATIONS (LOCATION CODE AH)           $          0.00
CASUALTY RECOVERIES                              $          0.00
NON-ATTORNEY CASUALTY RECOVERIES                 $          0.00
ESTATE RECOVERIES                                $          0.00
CHILD SUPPORT RECOVERIES                         $          0.00
TRUST RECOVERIES                                 $          0.00
MEDICARE PART A - COMMONWEALTH RECOUPMENTS       $          0.00
COMMONWEATLH INSURANCE RECOVERIES                $          0.00
DMS PROVIDER CLAIM CREDITS                       $          0.00
REGIONAL PSYCHIATRIC CROSSOVER REFUNDS           $          0.00
                                                 ----------------

SUBTOTAL                                         $          0.00

PROVIDER INTEREST                                $          0.00
MEMBER INTEREST                                  $          0.00
SUBTOTAL                                         $          0.00
                                                 ----------------

RECOVERY OPERATIONS BRANCH TOTALS                $          0.00

DRUG REBATE CHECKS                               $          0.00

PROGRAM INTEGRITY (LOCATION CODE P)              $          0.00

COMBINED OVERALL GRAND TOTAL                     $          0.00
```

```
Report  : FIN-8080-M                          COMMONWEALTH OF KENTUCKY                          Run Date: MM/DD/CCYY
Process : FINJM808                      MEDICAID MANAGEMENT INFORMATION SYSTEM                  Run Time:   99:99:99
Location: FINP8080                   MONTHLY PROGRAM INTEGRITY COLLECTIONS REPORT                   Page:       9999
                                            FOR THE MONTH OF XXXXXXXX CCYY

 PART C:  YEARLY TOTALS
 ------------------------

 UTILIZATION REVIEW BRANCH RECOVERIES

 PROVIDERS ONLY

 OFFICE INSPECTOR GENERAL (AC=13F)              $          0.00
 ATTORNEY GENERAL (AC=13G)                      $          0.00
 SAPIENT (FIRST CONTRACT) (AC=51)               $          0.00
 HEALTHWATCH (SECOND CONTRACT) (AC=52)          $          0.00
 MYERS & STAUFFER (THIRD CONTRACT) (AC=MS)      $          0.00
 UTILIZATION REVIEW BRANCH (LOCATION CODE AG)   $          0.00
 LAW ENFORCEMENT - STATE SHARE ONLY             $          0.00
 PROVIDER INTEREST                              $          0.00
 DATE OF DEATH RECOVERIES (DR)                  $          0.00
 PROGRAM INTEGRITY (LOCATION CODE P)            $          0.00
                                                ----------------
 PROVIDERS ONLY SUBTOTAL                        $          0.00

 MEMBERS ONLY

 MEMBER FRAUD (AC=77)                           $          0.00
 MEMBER INTEREST                                $          0.00
                                                ----------------
 MEMBER ONLY SUBTOTAL                           $
50.00

 UTILIZATION REVIEW RECOVERY TOTAL              $          0.00

 RECOVERY OPERATIONS BRANCH

 TPL CONTRACTOR PCG COMMERCIAL INS RECOVERIES   $          0.00
 TPL CONTRACTOR PCG2 COMMERCIAL INS RECOVERIES  $          0.00
 TPL CONTRACTOR RECOUPMENT PART A RECOVERIES    $          0.00
 TPL CONTRACTOR RECOUPMENT PART B RECOVERIES    $          0.00
 CREDIT BALANCE RECOVERIES                      $          0.00
 PCG BATCH RANGE 61 - 65 RECOVERIES             $          0.00
 PCG2 BATCH RANGE 71 - 75 RECOVERIES            $          0.00
 RECOVERY OPERATIONS (LOCATION CODE AH)         $          0.00
 CASUALTY RECOVERIES                            $          0.00
 NON-ATTORNEY CASUALTY RECOVERIES               $          0.00
 ESTATE RECOVERIES                              $          0.00
 CHILD SUPPORT RECOVERIES                       $          0.00
 TRUST RECOVERIES                               $          0.00
 MEDICARE PART A - COMMONWEALTH RECOUPMENTS     $          0.00
 COMMONWEALTH INSURANCE RECOVERIES              $          0.00
 DMS PROVIDER CLAIM CREDITS                     $          0.00
 REGIONAL PSYCHIATRIC CROSSOVER REFUNDS         $          0.00
                                                ----------------
 SUBTOTAL                                       $          0.00

 PROVIDER INTEREST                              $          0.00
 MEMBER INTEREST                                $          0.00
                                                ----------------
 SUBTOTAL                                       $          0.00
 RECOVERY OPERATIONS BRANCH TOTALS              $          0.00

 DRUG REBATE CHECKS                             $          0.00
 PROGRAM INTEGRITY (LOCATION CODE P)            $          0.00

 COMBINED OVERALL GRAND TOTAL                   $          0.00
```

2.8.171.4 Field Descriptions

Field	Description	Length	Data Type	DB Table	DB Attributes
AS OF	The cycle date for which the report was produced.	10	Date (MM/DD/CCYY)	N/A	N/A
ATTORNEY GENERAL (AC=13G)	The amount recovered for A/R's with reason code 13 and location code G	13	Character		Calculated Field
CASUALTY RECOVERIES	Grand total recovered from KYMT3920-R001	13	Number		Calculated Field
CHILD SUPPORT RECOVERIES	Grand total recovered from the KYMT3910-R001	13	Number		Calculated Field
COMBINED OVERALL TOTAL	The Grand total of all recoveries reported.	13	Number		Calculated Field
COMMONWEALTH INSURANCE RECOVERIES	Total TPL recovered from the KYMT2910-R004	13	Number		Calculated Field
CREDIT BALANCE RECOVERIES	Grand total recovered from the KYMC8071-R001	13	Number		Calculated Field
DMS PROVIDER CLAIM CREDITS	Total provider claim credits from the KYMC7450- R001	13	Number		Calculated Field
DRUG REBATE CHECKS	Total recovered from Drug Rebate recoveries reported on KYMB7200-R001	13	Number		Calculated Field
ESTATE RECOVERIES	Grand total recovered from the KYMT3900-R001	13	Number		Calculated Field
HEADING MONTH/YEAR	The month and year for which the report is run	10	Character	N/A	N/A

HEALTHWATCH (SECOND CONTRACT) (AC=52)	The amount recovered for A/R's with reason code 52.	13	Character		Calculated Field
LAW ENFORCEMENT - STATE SHARE ONLY	The amount recovered for A/R's with the reason code SS	13	Character		Calculated Field
MEDICARE PART A - UNISYS RECOUPMENTS	The amount recovered for Medicare Part A recoveries from A/R	13	Number		Calculated Field
MEMBER FRAUD (AC=77)	The amount recovered for member A/R's with reason code 77.	13	Character		Calculated Field
MEMBER INTEREST	Interest, if any, charged on a member A/R with reason code 77. (This field is currently inactive)	13	Number		Calculated Field
MEMBER INTEREST	Gives Member interest if any associated with the Recovery Operations Branch recoveries listed above. (field inactive at this time)	13	Number		Calculated Field
MEMBER ONLY		13	Number		Calculated Field
MEMBER SUBTOTAL	The total member fraud amount	13	Number		Calculated Field
MEYERS & STAUFFER (THIRD CONTRACT (AC = MS)	The amount recovered for A/R's with reason code MS.	13	Character		Calculated Field
NON ATTORNEY CASUALTY RECOVERIES	Grand total recovered from the KYMT3930-R001	13	Number		Calculated Field
OFFICE INSPECTOR GENERAL (AC=13F)	The amount recovered for A/R's with reason code 13 and location code F	13	Character		Calculated Field

PCG BATCH RANGE 61 - 65 RECOVERIES	Grand total recovered from the KYMT3760-R001	13	Number		Calculated Field
PCG BATCH RANGE 71 - 75 RECOVERIES	Grand total recovered from the KYMT3760-R002	13	Number		Calculated Field
PROGRAM INTEGRITY (LOCATION CODE P)	Total recovered for A/R's with location code P.	13	Number		Calculated Field
PROGRAM INTEGRITY (LOCATION CODE P)	Total recovered for A/R's with location code P.	13	Number		Calculated Field
PROVIDER INTEREST	Gives provider interest if any associated with the Recover Operation Branch recoveries listed above.	13	Number		Calculated Field
PROVIDER INTEREST	Interest recovered on A/R's related to this section of the report.	13	Number		Calculated Field
PROVIDERS ONLY		13	Character		Calculated Field
PROVIDERS ONLY SUBTOTAL	The total for the Providers only section.	13	Number		Calculated Field
RECOVERY BRANCH TOTAL	Total recovered for the Recovery Operations Branch.	13	Number		Calculated Field
RECOVERY OPERATIONS (LOCATION AH)	The amount recovered for A/R's with location code AH	13	Number		Calculated Field
REGIONAL PSYCHIATRIC CROSSOVER REFUNDS	Total dollar recovered from AR with reason code XO	13	Number		Calculated Field
SAPIENT (FIRST	The amount recovered for A/R's with reason code 51.	13	Character		Calculated Field

CONTRACT) (AC=51)					
SUBTOTAL	Subtotal of the interest fields.	13	Number		Calculated Field
SUBTOTAL	The subtotal for Recovery Operations Branch recoveries.	13	Number		Calculated Field
TPL CONTRACTOR COMMERCIAL INSURANCE RECOVERIES	Grand total recovered from the KYMT3740-R001	13	Number		Calculated Field
TPL CONTRACTOR RECOUPMENT PART A RECOVERIES	Grand total recovered from the KYMC8076-R001	13	Number		Calculated Field
TPL CONTRACTOR RECOUPMENT PART B RECOVERIES	Grand total recovered from the KYMC8082-R001	13	Number		Calculated Field
TRUST RECOVERIES	Grand total recovered from the KYMT3940-R001	13	Number		Calculated Field
UTILIZATION REVIEW BRANCH (LOCATION CODE AG)	The amount recovered for A/R's with location code AG.	13	Character		Calculated Field
UTILIZATION REVIEW RECOVERY TOTAL	The column totals of all amounts reported in the Utilization Review Branch Recoveries.	13	Number		Calculated Field

2.8.171.5 Associated Programs

Program	Description
finp8080	Monthly Program Integrity Collections Report

2.8.171.6 Associated Requirements

ID
30.090.009.002.34

2.8.171.7 Change Orders

ID	Name	Description
1155	create FIN-8080-M collections rp	Create the Legacy KYMC8080-R001 Monthly program Integrity Monthly Collections Report.
9084	FIN-8080-M	The FIN-8080-M is reporting the Commonwealth Insurance recoveries as the same amount for the Month, Quarter, and year.

2.8.172 FIN-8082-M -- Monthly Recoupment Status - Reason Code BB

Reports recoupments processed for providers having recoupment balances for reason code BB ? TPL Contractor.

SORT GROUP BY NUM_CONTROL_AR, SAK_FIN_PERIOD, SAK_PAYEE, DTE_AR_LIABILITY, DTE_ADDED, ID_PROV_PRIMARY, NAM_PAY_TO_PROV, DTE_PERIOD_END, DTE_PERIOD_EFF

2.8.172.1 Technical Name

FIN-8082-M

2.8.172.2 Sort Order

Period Date

Provider Number

For readability, the layout displays on the next page.

2.8.172.3 Monthly Recoupment Status - Reason Code BB Layout

```
Report  : FIN-8082-M                    COMMONWEALTH OF KENTUCKY                    Run Date: MM/DD/CCYY
Process : FINJM882                MEDICAID MANAGEMENT INFORMATION SYSTEM            Run Time:   99:99:99
Location: FINP8082              MONTHLY RECOUPMENT STATUS - REASON CODE BB              Page:       9999

                                CYCLE # ..   FOR SETUP DATE : FROM MM/DD/CCYY THRU MM/DD/CCYY
PROVIDER     PROVIDER          ORINGINAL AMOUNT   SETUP      TOTAL            TOTAL            TOT RECOUPED     REMAINDER TO
NUMBER       NAME              IDENTIFIED         DATE       TO BE RECOUPED   RECOUPED MONTH        TO DATE      BE RECOUPED

9999999999   XXXXXXXXXXXXXXXXXXXX  99,999,999.99  MM/DD/CCYY  99,999,999.99    99,999,999.99   99,999,999.99    99,999,999.99
9999999999   XXXXXXXXXXXXXXXXXXXX  99,999,999.99  MM/DD/CCYY  99,999,999.99    99,999,999.99   99,999,999.99    99,999,999.99
9999999999   XXXXXXXXXXXXXXXXXXXX  99,999,999.99  MM/DD/CCYY  99,999,999.99    99,999,999.99   99,999,999.99    99,999,999.99
9999999999   XXXXXXXXXXXXXXXXXXXX  99,999,999.99  MM/DD/CCYY  99,999,999.99    99,999,999.99   99,999,999.99    99,999,999.99
9999999999   XXXXXXXXXXXXXXXXXXXX  99,999,999.99  MM/DD/CCYY  99,999,999.99    99,999,999.99   99,999,999.99    99,999,999.99
9999999999   XXXXXXXXXXXXXXXXXXXX  99,999,999.99  MM/DD/CCYY  99,999,999.99    99,999,999.99   99,999,999.99    99,999,999.99
9999999999   XXXXXXXXXXXXXXXXXXXX  99,999,999.99  MM/DD/CCYY  99,999,999.99    99,999,999.99   99,999,999.99    99,999,999.99
9999999999   XXXXXXXXXXXXXXXXXXXX  99,999,999.99  MM/DD/CCYY  99,999,999.99    99,999,999.99   99,999,999.99    99,999,999.99

                                                   CYCLE TOTAL   99,999,999.99    99,999,999.99   99,999,999.99    99,999,999.99

                                CYCLE # ..   FOR SETUP DATE : FROM MM/DD/CCYY THRU MM/DD/CCYY
PROVIDER     PROVIDER          ORINGINAL AMOUNT   SETUP      TOTAL            TOTAL            TOT RECOUPED     REMAINDER TO
NUMBER       NAME              IDENTIFIED         DATE       TO BE RECOUPED   RECOUPED MONTH        TO DATE      BE RECOUPED

9999999999   XXXXXXXXXXXXXXXXXXXX  99,999,999.99  MM/DD/CCYY  99,999,999.99    99,999,999.99   99,999,999.99    99,999,999.99
9999999999   XXXXXXXXXXXXXXXXXXXX  99,999,999.99  MM/DD/CCYY  99,999,999.99    99,999,999.99   99,999,999.99    99,999,999.99
9999999999   XXXXXXXXXXXXXXXXXXXX  99,999,999.99  MM/DD/CCYY  99,999,999.99    99,999,999.99   99,999,999.99    99,999,999.99
9999999999   XXXXXXXXXXXXXXXXXXXX  99,999,999.99  MM/DD/CCYY  99,999,999.99    99,999,999.99   99,999,999.99    99,999,999.99
9999999999   XXXXXXXXXXXXXXXXXXXX  99,999,999.99  MM/DD/CCYY  99,999,999.99    99,999,999.99   99,999,999.99    99,999,999.99
9999999999   XXXXXXXXXXXXXXXXXXXX  99,999,999.99  MM/DD/CCYY  99,999,999.99    99,999,999.99   99,999,999.99    99,999,999.99
9999999999   XXXXXXXXXXXXXXXXXXXX  99,999,999.99  MM/DD/CCYY  99,999,999.99    99,999,999.99   99,999,999.99    99,999,999.99
9999999999   XXXXXXXXXXXXXXXXXXXX  99,999,999.99  MM/DD/CCYY  99,999,999.99    99,999,999.99   99,999,999.99    99,999,999.99

                                                   CYCLE TOTAL   99,999,999.99    99,999,999.99   99,999,999.99    99,999,999.99

                                                   GRAND TOTAL   99,999,999.99    99,999,999.99   99,999,999.99    99,999,999.99
                                                   ***  NO RECOUPMENTS THIS WEEK ***
                                                   TOTAL PROVIDERS            99999
                                                   ****  END OF REPORT ****
```

2.8.172.4 Field Descriptions

Field	Description	Length	Data Type	DB Table	DB Attributes
Cycle #	The cycle being reported.	4	Number	N/A	N/A
Cycle Total	The column totals of all recoupment balances reported for the cycle.	13	Number	N/A	Calculated Field
For Setup Date:	The date span represented by the cycle number. All recoupment balances set up between these dates are reported in the current cycle number.	20	Date (MM/DD/CCYY)	N/A	N/A
Grand Total	The column totals of all recoupment balances reported for all cycles	13	Number	N/A	Calculated Field
Original Amount Identified	The original set up amount for recoupment.	13	Number	T_ACCT_REC	AMT_SETUP
Provider Name	The name of the Provider.	20	Character	T_PR_NAM	NAME
Provider Number	The Medicaid provider ID of the provider having the recoupment balance.	10	Number	T_PR_IDENTIFIER	ID_PROVIDER
Remaining To Be Recouped	The balance still remaining.	13	Number	N/A	Calculated Field
Setup Date	The date the recoupment balance was set up.	10	Date (MM/DD/CCYY)	T_ACCT_REC	DTE_AR_LIABILITY
Tot Recouped To Date	The total amount that has been recouped to date.	13	Number	N/A	Calculated Field
Total	The column totals for all recoupment balances for the provider.	13	Number	N/A	Calculated Field
Total Providers	The total number of providers appearing on the report.	13	Number	N/A	Calculated Field
Total Recouped Month	The total amount that has been recouped during the month being reported.	13	Number	N/A	Calculated Field

Field	Description	Length	Data Type	DB Table	DB Attributes
Total to be Recouped	The amount set up for recoupment.	13	Number		Calculated Field

2.8.172.5 Associated Programs

Program	Description
finp8082	Monthly Recoupment Status - Reason Code BB

2.8.172.6 Associated Requirements

ID
30.090.009.002.34

2.8.172.7 Change Orders

ID	Name	Description
1152	create cont recoup status by rsn	Create the legacy KYMC8071-R001, KYMC8076-R001, KYMC8077-R001, KYMC8082-R001, KYMC8083 monthly recoupment status - reason code reports.

2.8.173 FIN-8084-M -- Monthly Recovered Status - Reason Code DG

Reports recoveries processed for providers for reason DG ? DRG Retro Review.

SORT ORDER BY ID_PROV_PRIMARY

2.8.173.1 Technical Name

FIN-8084-M

2.8.173.2 Sort Order

Provider Number

2.8.173.3 Monthly Recovered Status - Reason Code DG Layout

```
Report  : FIN-8084-M                          COMMONWEALTH OF KENTUCKY                          Run Date: MM/DD/CCYY
Process : FINJM884                      MEDICAID MANAGEMENT INFORMATION SYSTEM                  Run Time:   99:99:99
Location: FINP8084                    MONTHLY RECOVERED STATUS - REASON CODE DG                     Page:       9999
                                                 MM/DD/CCYY - MM/DD/CCYY


PROVIDER   PROVIDER                        TOTAL                TOTAL RECOVERED  TOTAL RECOVERED    TOT RECOVERED     REMAINDER TO
NUMBER     NAME                            TO BE RECOVERED      FOR MONTH-CHECKS FOR MONTH-RECOUPS  FOR MONTH          BE RECOVERED
9999999999 XXXXXXXXXX XXX  XXX  X  XXX      99,999,999.99        99,999,999.99    99,999,999.99    99,999,999.99     99,999,999.99
9999999999 XXXXXXXXXX XXX  XXX  X  XXX      99,999,999.99        99,999,999.99    99,999,999.99    99,999,999.99     99,999,999.99
9999999999 XXXXXXXXXX XXX  XXX  X  XXX      99,999,999.99        99,999,999.99    99,999,999.99    99,999,999.99     99,999,999.99
9999999999 XXXXXXXXXX XXX  XXX  X  XXX      99,999,999.99        99,999,999.99    99,999,999.99    99,999,999.99     99,999,999.99
                                            99,999,999.99        99,999,999.99    99,999,999.99    99,999,999.99     99,999,999.99
                              ** TOTAL **   99,999,999.99        99,999,999.99    99,999,999.99    99,999,999.99     99,999,999.99

9999999999 XXXXXXXXXX XXX  XXX  X  XXX      99,999,999.99        99,999,999.99    99,999,999.99    99,999,999.99     99,999,999.99
9999999999 XXXXXXXXXX XXX  XXX  X  XXX      99,999,999.99        99,999,999.99    99,999,999.99    99,999,999.99     99,999,999.99
9999999999 XXXXXXXXXX XXX  XXX  X  XXX      99,999,999.99        99,999,999.99    99,999,999.99    99,999,999.99     99,999,999.99
                              ** TOTAL **   99,999,999.99        99,999,999.99    99,999,999.99    99,999,999.99     99,999,999.99


                              GRAND TOTAL   99,999,999.99        99,999,999.99    99,999,999.99    99,999,999.99     99,999,999.99
                                                  TOTAL PROVIDERS          9999
```

2.8.173.4 Field Descriptions

Field	Description	Length	Data Type	DB Table	DB Attributes
AS OF	The cycle date for which the report was produced.	10	Date (MM/DD/CCYY)	N/A	N/A
Grand Total	The column totals of all payouts reported for the provider.	13	Number	N/A	Calculated Field

Field	Description	Length	Data Type	DB Table	DB Attributes
Provider Name	The name of the provider.	25	Character	T_PR_NAM	NAME
Provider Number	The Medicaid provider ID of the provider having the recovery balance.	10	Number	T_PR_IDENTIFIER	ID_PROVIDER
Remainder To Be Recovered	The balance still remaining.	13	Number	N/A	Calculated Field
Tot Recovered For Month	The total amount that has been recovered during the month being recovered.	13	Number	N/A	Calculated Field
Total	The column totals for all recovery balances for the provider.	13	Number	N/A	Calculated Field
Total Providers	The total number of providers appearing on the report.	13	Number	N/A	Calculated Field
Total Recovered For Month-Checks	The total amount that has been recovered during the month for checks.	13	Number	N/A	Calculated Field
Total Recovered For Month-Recoups	The total amount that has been recovered during the month for recoupments.	13	Number	N/A	Calculated Field
Total To Be Recovered	The amount set up for recovery	13	Number	N/A	Calculated Field

2.8.173.5 Associated Programs

Program	Description
finp8084	Monthly Recovered Status - Reason Code DG

2.8.173.6 Associated Requirements

ID
30.090.009.002.34

2.8.173.7 Change Orders

ID	Name	Description
1157	Create FIN-8084-M DRG review	Create the Legacy KYMC8084-R001 Monthly recovered Status - Reason Code DG report.

2.8.174 FIN-8087-SFY -- Fiscal Year End Receipts Status - REASON CODE 77

Reports receipts processed for recipients having received balances for all reason codes. This was written for the A/R Recipient Intentional Program Violation. This report is sorted by recipient number within reason code, with a subtotal for the reason code and an overall report total. **Currently the only Reason code set up for A/R Recipient Intentional Program Violation is Reason code 77.

SORT GROUP BY ID_MEDICAID, SAK_PAYEE, DTE_ADDED

2.8.174.1 Technical Name

FIN-8087-SFY

2.8.174.2 Sort Order

Member Number

2.8.174.3 Fiscal Year End Receipts Status - REASON CODE 77 Layout

```
Report  : FIN-8087-SFY                          COMMONWEALTH OF KENTUCKY                        Run Date: MM/DD/CCYY
Process : FINJA887                     MEDICAID MANAGEMENT INFORMATION SYSTEM                   Run Time:   99:99:99
Location: FINP8087                  FISCAL YEAR END RECEIPTS STATUS - REASON CODE 77                Page:       9999
                                                      MM/DD/CCYY

MEMBER     MEMBER                        SETUP         TOTAL            TOTAL             TOT RECEIVED     REMAINDER TO
NUMBER     NAME                          DATE          TO BE RECEIVED   RECEIVED MONTH         TO DATE      BE RECEIVED

999999999  XXXXXXXXXXXXXXXXXXXXXXXXX  MM/DD/CCYY       99,999,999.99    99,999,999.99    99,999,999.99    99,999,999.99
999999999  XXXXXXXXXXXXXXXXXXXXXXXXX  MM/DD/CCYY       99,999,999.99    99,999,999.99    99,999,999.99    99,999,999.99
999999999  XXXXXXXXXXXXXXXXXXXXXXXXX  MM/DD/CCYY       99,999,999.99    99,999,999.99    99,999,999.99    99,999,999.99
999999999  XXXXXXXXXXXXXXXXXXXXXXXXX  MM/DD/CCYY       99,999,999.99    99,999,999.99    99,999,999.99    99,999,999.99
999999999  XXXXXXXXXXXXXXXXXXXXXXXXX  MM/DD/CCYY       99,999,999.99    99,999,999.99    99,999,999.99    99,999,999.99
999999999  XXXXXXXXXXXXXXXXXXXXXXXXX  MM/DD/CCYY       99,999,999.99    99,999,999.99    99,999,999.99    99,999,999.99
                                        GRAND TOTAL    99,999,999.99    99,999,999.99    99,999,999.99    99,999,999.99
                                               ***  NO RECEIPTS THIS WEEK    ***
                                               TOTAL MEMBERS                 9999

  FISCAL YEAR TOTALS
 GRAND TOTAL FOR 1ST QUARTER  99,999,999.99
 GRAND TOTAL FOR 2ND QUARTER  99,999,999.99
 GRAND TOTAL FOR 3RD QUARTER  99,999,999.99
 GRAND TOTAL FOR 4TH QUARTER  99,999,999.99
 GRAND TOTAL YEAR             99,999,999.99
                                               ****  END OF REPORT ****
```

2.8.174.4 Field Descriptions

Field	Description	Length	Data Type	DB Table	DB Attributes
Grand Total	The column totals of all received balances reported for all cycles.	13	Number	N/A	Calculated Field
Member Name	The name of the Member.	25	Character	T_RE_BASE	CONCATENATION
Member Number	The Medicaid Member ID of the Member having the received balance.	10	Number	T_RE_BASE	ID MEDICAID
Remaining To Be Received	The balance still remaining	13	Number	N/A	Calculated Field
Setup Date	The date the balance was set up.	10	Date (MM/DD/CCYY)	T_ACCT_REC	DTE_AR_LIABILITY
Tot Received To Date	The total amount that has been received to date.	13	Number	N/A	Calculated Field
Total	The column totals for all received balances for the provider	13	Number	N/A	Calculated Field
Total Members	The total number of members appearing on the report.	13	Number	N/A	Calculated Field
Total Received Month	The total amount that has been received during the month being reported.	13	Number	N/A	Calculated Field
Total To Be Received	The amount set up for receipt	13	Number	N/A	Calculated Field

2.8.174.5 Associated Programs

Program	Description
finp8087	Fiscal Year End Receipts Status - REASON CODE 77

2.8.174.6 Associated Requirements

ID
30.090.009.002.34

2.8.174.7 Change Orders

ID	Name	Description
1159	Create FIN-8087-A rsn code 77	Create the legacy KYMC8087-R001 Fiscal Year End Member status - Reason code 77 reports. The reason code 77 in the legacy system is 'member intentional PGM violate'.

2.8.175 FIN-8095-W -- Weekly Mass Adjustment Report

This report list total adjustment by provider by week.

SORT ORDER BY ID_PROV_PRIMARY

2.8.175.1 Technical Name

FIN-8095-W

2.8.175.2 Sort Order

Provider Number

2.8.175.3 Weekly Mass Adjustment Report Layout

```
Report  : FIN-8095-W                          COMMONWEALTH OF KENTUCKY                        Run Date: MM/DD/CCYY
Process : FINJW895                      MEDICAID MANAGEMENT INFORMATION SYSTEM                Run Time:   99:99:99
Location: FINP8095                            WEEKLY MASS ADJUSTMENT REPORT                       Page:       9999
                                                 MM/DD/CCYY - MM/DD/CCYY

PROVIDER NAME          PROVIDER   BATCH BATCH DATES OF  SERVICE  COV  NET PROF  COMP   TOTAL COVERED  ORIG PD AMT &    MASS ADJ AMT
                       NUMBER     DATE  NUM   ----- RANGE -----  DAYS TPL & CCNT INC         CHARGES     NEW PD AMT   CONTINUING IN
XXXXXXXXXXXXXXXXX 9999999999  YYDDD  999   MM/DD/CCYY MM/DD/CCYY  999 99,999,999.99    99,999,999.99  99,999,999.99   99,999,999.99
                                                                       99,999,999.99                   99,999,999.99   99,999,999.99
                                                                       99,999,999.99
                                                                       99,999,999.99

XXXXXXXXXXXXXXXXX 9999999999  YYDDD  999   MM/DD/CCYY MM/DD/CCYY  999 99,999,999.99    99,999,999.99  99,999,999.99   99,999,999.99
                                                                       99,999,999.99                   99,999,999.99   99,999,999.99
                                                                       99,999,999.99
                                                                       99,999,999.99

                                     PROVIDER TOTAL               999 99,999,999.99    99,999,999.99  99,999,999.99   99,999,999.99
                                                                       99,999,999.99                   99,999,999.99   99,999,999.99
                                                                       99,999,999.99
                                                                       99,999,999.99
```

2.8.175.4 Field Descriptions

Field	Description	Length	Data Type	DB Table	DB Attributes
Batch Date	Transaction date for the claims to be adjusted.	5	Date (MM/DD/CCYY)	T_ADJ_MASS_CLAIM	NUM_ICN
Batch Num	Transaction number for the claims to be adjusted.	3	Number	T_ADJ_MASS_CLAIM	NUM_ICN

Field	Description	Length	Data Type	DB Table	DB Attributes
CCNT INC	Patient continuing income amount.	13	Number	N/A	Calculated Field
Continuing In	Total patient liability amount.	13	Number	N/A	Calculated Field
Cov Days	The number of days which the services are covered by the plan.	3	Number	N/A	Calculated Field
Dates of Service Range	The date which the professional service rendered.	20	Date (MM/DD/CCYY)	T_ADJ_MASS_CLAIM	DTE_FIRST_SVC/DTE_LAST_SVC
Mass Adj Amt	Original reimbursement amount minus adjusted reimbursement amount.	13	Number	N/A	Calculated Field
Net	Net claim charge amount.	13	Number	N/A	Calculated Field
Orig PD Amt	The initial payment amount.	13	Number	N/A	Calculated Field
Payment Cycle	sequential number indicating the number of payment cycles run since the initial.	9	Number	N/A	Calculated Field
Prof Comp	Amount charged by the provider who interprets the technical service result.	13	Number	N/A	Calculated Field
Provider Name	The provider name identified on the adjustment record.	20	Character	T_PR_NAM	NAME
Provider Number	The provider number identified on the adjustment record.	10	Number	T_PR_IDENTIFIER	ID_PROVIDER
Provider Total	Grand totals	13	Number	N/A	Calculated Field
TPL	Third Party Payment amount.	13	Number	N/A	Calculated Field

Field	Description	Length	Data Type	DB Table	DB Attributes
Total Covered Charges	Total amount covered by the plan.	13	Number	N/A	Calculated Field

2.8.175.5 Associated Programs

Program	Description
finp8095	Weekly Mass Adjustment Report

2.8.175.6 Associated Requirements

ID
30.090.009.003.1

2.8.175.7 Change Orders

ID	Name	Description
1158	create FIN-8095-W mass adj rpt	Create the Legacy KYMC8095-R001 Weekly Mass Adjustment Report.

2.8.176 FIN-9551-Q -- CMS Quarterly Accounts Receivable Report (Newly Aged)

This report displays and summarizes A/R information by provider type for newly aged accounts for the quarter, and it also reports information for Federal Fiscal Participation adjustments.

SORT GROUP BY: NUM_CONTROL_AR, SAK_PAYEE, DTE_AR_LIABILITY, DTE_ADDED, CDE_PROV_TYPE, DSC_PROV_TYPE, ID_PROV_PRIMARY

2.8.176.1 Technical Name

FIN-9551-Q

2.8.176.2 Sort Order

Provider Number

2.8.176.3 CMS Quarterly Accounts Receivable Report (Newly Aged) Layout

```
Report   : FIN-9551-Q                          COMMONWEALTH OF KENTUCKY                          Run Date: MM/DD/CCYY
Process  : FINJQ955                      MEDICAID MANAGEMENT INFORMATION SYSTEM                  Run Time:   99:99:99
Location: FINP9551                 CMS QUARTERLY ACCOUNTS RECEIVABLE REPORT (NEWLY AGED)             Page:       9999
                                                 QUARTER ENDING MM/DD/CCYY

 PROVIDER TYPE  XX  XXXXXXXXXXXXXXXXXXX

  FEDERAL     PROVIDER              PROVIDER       BEGINNING     ACTIVITY   CANCELLATIONS CASH PAYMENTS  TOTAL AMOUNTS    BAL AS OF
  FYE         NAME                  NUMBER         BALANCE       DATE       AND/OR        AND/OR         RECEIVED  OR     END OF QUARTER
                                                                             ADJUSTMENTS   RECOUP RECVD   ADJUSTED IN QTR
MM/DD/CCYY  XXXXXXXXXXXXXXXXXXX   9999999999  99,999,999.990  MM/DD/CCYY 99,999,999.99  99,999,999.99  99,999,999.99  99,999,999.99
MM/DD/CCYY  XXXXXXXXXXXXXXXXXXX   9999999999  99,999,999.990  MM/DD/CCYY 99,999,999.99  99,999,999.99  99,999,999.99  99,999,999.99
MM/DD/CCYY  XXXXXXXXXXXXXXXXXXX   9999999999  99,999,999.990  MM/DD/CCYY 99,999,999.99  99,999,999.99  99,999,999.99  99,999,999.99
MM/DD/CCYY  XXXXXXXXXXXXXXXXXXX   9999999999  99,999,999.990  MM/DD/CCYY 99,999,999.99  99,999,999.99  99,999,999.99  99,999,999.99
MM/DD/CCYY  XXXXXXXXXXXXXXXXXXX   9999999999  99,999,999.990  MM/DD/CCYY 99,999,999.99  99,999,999.99  99,999,999.99  99,999,999.99

 PROVIDER TYPE  XX  XXXXXXXXXXXXXXXXXXX

  FEDERAL     PROVIDER              PROVIDER       BEGINNING     ACTIVITY   CANCELLATIONS CASH PAYMENTS  TOTAL AMOUNTS    BAL AS OF
  FYE         NAME                  NUMBER         BALANCE       DATE       AND/OR        AND/OR         RECEIVED  OR     END OF QUARTER
                                                                             ADJUSTMENTS   RECOUP RECVD   ADJUSTED IN QTR
MM/DD/CCYY  XXXXXXXXXXXXXXXXXXX   9999999999  99,999,999.990  MM/DD/CCYY 99,999,999.99  99,999,999.99  99,999,999.99  99,999,999.99
MM/DD/CCYY  XXXXXXXXXXXXXXXXXXX   9999999999  99,999,999.990  MM/DD/CCYY 99,999,999.99  99,999,999.99  99,999,999.99  99,999,999.99
MM/DD/CCYY  XXXXXXXXXXXXXXXXXXX   9999999999  99,999,999.990  MM/DD/CCYY 99,999,999.99  99,999,999.99  99,999,999.99  99,999,999.99
MM/DD/CCYY  XXXXXXXXXXXXXXXXXXX   9999999999  99,999,999.990  MM/DD/CCYY 99,999,999.99  99,999,999.99  99,999,999.99  99,999,999.99
MM/DD/CCYY  XXXXXXXXXXXXXXXXXXX   9999999999  99,999,999.990  MM/DD/CCYY 99,999,999.99  99,999,999.99  99,999,999.99  99,999,999.99
```

2.8.176.4 Field Descriptions

Field	Description	Length	Data Type	DB Table	DB Attributes
Activity Date	The date of the last transaction was processed.	10	Date (MM/DD/CCYY)	T_AR_DISP	DTE_GENERIC
Bal As Of End Of Quarter	Balance of the account receivable for the end of the quarter.	13	Number	N/A	Calculated Field
Beginning Balance	The beginning balance amount of the provider for the quarter.	13	Number	N/A	Calculated Field
Cancellations And/Or Adjustments	Dollar amount which was cancelled or adjusted for the quarter.	13	Number	N/A	Calculated Field
Cash Payments And/Or Recoup Recvd	Total dollar amount recouped or received as cash payment for the quarter.	13	Number	N/A	Calculated Field
Federal FYE	The date the account receivable was set up.	10	Date (MM/DD/CCYY)	N/A	N/A
Provider Name	The name of the provider associated with the account receivable.	20	Character	T_PR_NAM	NAME
Provider Number	The number of the provider associated with the account receivable.	10	Number	T_PR_IDENTIFIER	ID_PROVIDER
Provider Type	The provider type of the provider number associated with the account receivable and the provider type description.	2	Character	T_PR_TYPE_CDE	DSC_PROV_TYPE
Quarter Ending	The month, day, and year the quarter ended.	10	Date (MM/DD/CCYY)	N/A	N/A
Total Amounts Received Or Adjusted In QTR	Total of payments received or recouped and cancellations or adjustments.	13	Number	N/A	Calculated Field

2.8.176.5 Associated Programs

Program	Description
finp9551	HCFA Quarterly Accounts Receivable Report (Newly Aged)

2.8.176.6 Associated Requirements

ID
30.090.009.003.1

2.8.176.7 Change Orders

ID	Name	Description
1171	Create CMS Quarterly AR reports	Create the legacy KYMC9550-R001, KYMC9550-R002, KYMC9550-R003 CMS Quarterly Accounts Receivable Reports
8842	FIN955* & 957* reports for 06/07	THE CMS QUARTERLY REPORTS NEED TO BE CORRECTED FOR QUARTER ENDING JUNE 2007. FUND CODE READING IN WRONG BY LOGIC FOR OCT, NOV AND DEC. ALSO A CONVERTED AR PAYMENT PLAN 3319865 FOR PROVIDER 33900218 REPORTED ON THE NEWLY AGED FOR THIS QUARTER AND LAST QUARTER WAS ON THE CARRYOVER. NEED NEW REPORT THIS AR SHOULD BE ON THE 9552 AS CARRYOVER WITH A MAY AND JUNE PAYMENT DISPOSITIONED AGAINST IT.

2.8.177 FIN-9552-Q -- CMS Quarterly Accounts Receivable Report (Carry Over)

This report displays and summarizes A/R information by provider type for carry over accounts for the quarter, and it also reports information for Federal Fiscal Participation adjustments.

SORT GROUP BY: NUM_CONTROL_AR, SAK_PAYEE, DTE_AR_LIABILITY, DTE_ADDED, CDE_PROV_TYPE, DSC_PROV_TYPE, ID_PROV_PRIMARY

2.8.177.1 Technical Name

FIN-9552-Q

2.8.177.2 Sort Order

Provider Number

For readability, the layout displays on the next page.

2.8.177.3 CMS Quarterly Accounts Receivable Report (Carry Over) Layout

```
Report  : FIN-9552-Q                          COMMONWEALTH OF KENTUCKY                          Run Date: MM/DD/CCYY
Process : FINJQ955                      MEDICAID MANAGEMENT INFORMATION SYSTEM                  Run Time:   99:99:99
Location: FINP9552                 CMS QUARTERLY ACCOUNTS RECEIVABLE REPORT (CARRY OVER)            Page:       9999
                                                 QUARTER ENDING MM/DD/CCYY

 PROVIDER TYPE  XX  XXXXXXXXXXXXXXXXXXX

  FEDERAL    PROVIDER              PROVIDER       BEGINNING     ACTIVITY   CANCELLATIONS CASH PAYMENTS  TOTAL AMOUNTS    BAL AS OF
  FYE        NAME                  NUMBER         BALANCE       DATE       AND/OR        AND/OR         RECEIVED  OR     END OF QUARTER
                                                                            ADJUSTMENTS   RECOUP RECVD   ADJUSTED IN QTR
MM/DD/CCYY  XXXXXXXXXXXXXXXXXXX   9999999999  99,999,999.990  MM/DD/CCYY 99,999,999.99  99,999,999.99  99,999,999.99  99,999,999.99
MM/DD/CCYY  XXXXXXXXXXXXXXXXXXX   9999999999  99,999,999.990  MM/DD/CCYY 99,999,999.99  99,999,999.99  99,999,999.99  99,999,999.99
MM/DD/CCYY  XXXXXXXXXXXXXXXXXXX   9999999999  99,999,999.990  MM/DD/CCYY 99,999,999.99  99,999,999.99  99,999,999.99  99,999,999.99
MM/DD/CCYY  XXXXXXXXXXXXXXXXXXX   9999999999  99,999,999.990  MM/DD/CCYY 99,999,999.99  99,999,999.99  99,999,999.99  99,999,999.99
MM/DD/CCYY  XXXXXXXXXXXXXXXXXXX   9999999999  99,999,999.990  MM/DD/CCYY 99,999,999.99  99,999,999.99  99,999,999.99  99,999,999.99

 PROVIDER TYPE  XX  XXXXXXXXXXXXXXXXXXX

  FEDERAL    PROVIDER              PROVIDER       BEGINNING     ACTIVITY   CANCELLATIONS CASH PAYMENTS  TOTAL AMOUNTS    BAL AS OF
  FYE        NAME                  NUMBER         BALANCE       DATE       AND/OR        AND/OR         RECEIVED  OR     END OF QUARTER
                                                                            ADJUSTMENTS   RECOUP RECVD   ADJUSTED IN QTR
MM/DD/CCYY  XXXXXXXXXXXXXXXXXXX   9999999999  99,999,999.990  MM/DD/CCYY 99,999,999.99  99,999,999.99  99,999,999.99  99,999,999.99
MM/DD/CCYY  XXXXXXXXXXXXXXXXXXX   9999999999  99,999,999.990  MM/DD/CCYY 99,999,999.99  99,999,999.99  99,999,999.99  99,999,999.99
MM/DD/CCYY  XXXXXXXXXXXXXXXXXXX   9999999999  99,999,999.990  MM/DD/CCYY 99,999,999.99  99,999,999.99  99,999,999.99  99,999,999.99
MM/DD/CCYY  XXXXXXXXXXXXXXXXXXX   9999999999  99,999,999.990  MM/DD/CCYY 99,999,999.99  99,999,999.99  99,999,999.99  99,999,999.99
MM/DD/CCYY  XXXXXXXXXXXXXXXXXXX   9999999999  99,999,999.990  MM/DD/CCYY 99,999,999.99  99,999,999.99  99,999,999.99  99,999,999.99
```

2.8.177.4 Field Descriptions

Field	Description	Length	Data Type	DB Table	DB Attributes
Activity Date	Date a cash payment or recoupment was processed.	10	Date (MM/DD/CCYY)	T_AR_DISP	DTE_GENERIC
Amount Reported	The beginning balance amount of the provider for the quarter.	13	Number	N/A	Calculated Field
Bal As Of End Of Quarter	Balance of the account receivable for the end of the quarter.	13	Number	N/A	Calculated Field
Cancellations And/Or Adjustments	Dollar amount which was cancelled or adjusted for the quarter.	13	Number	N/A	Calculated Field
Cash Payments And/Or Recoup Recvd	Total dollar amount recouped or received as cash payment for the quarter.	13	Number	N/A	Calculated Field
Federal FYE	The date the account receivable was set up.	10	Date (MM/DD/CCYY)	N/A	N/A
Provider Name	The name of the provider associated with the account receivable.	20	Character	T_PR_NAM	NAME
Provider Number	The number of the provider associated with the account receivable.	10	Number	T_PR_IDENTIFIER	ID_PROVIDER
Provider Type	The provider type of the provider number associated with the account receivable and the provider type description.	2	Character	T_PR_TYPE_CDE	DSC_PROV_TYPE
Quarter Ending	The month, day, and year the quarter ended.	10	Date (MM/DD/CCYY)	N/A	N/A
Total Amounts Received Or Adjusted in QTR	Total of payments received or recouped and cancellations or adjustments.	13	Number	N/A	Calculated Field
		0	Number	N/A	

2.8.177.5 Associated Programs

Program	Description
finp9552	CMS Quarterly Accounts Receivable Report (Carry Over)

2.8.177.6 Associated Requirements

ID
30.090.009.003.1

2.8.177.7 Change Orders

ID	Name	Description
1171	Create CMS Quarterly AR reports	Create the legacy KYMC9550-R001, KYMC9550-R002, KYMC9550-R003 CMS Quarterly Accounts Receivable Reports
8842	FIN955* & 957* reports for 06/07	THE CMS QUARTERLY REPORTS NEED TO BE CORRECTED FOR QUARTER ENDING JUNE 2007. FUND CODE READING IN WRONG BY LOGIC FOR OCT, NOV AND DEC. ALSO A CONVERTED AR PAYMENT PLAN 3319865 FOR PROVIDER 33900218 REPORTED ON THE NEWLY AGED FOR THIS QUARTER AND LAST QUARTER WAS ON THE CARRYOVER. NEED NEW REPORT THIS AR SHOULD BE ON THE 9552 AS CARRYOVER WITH A MAY AND JUNE PAYMENT DISPOSITIONED AGAINST IT.

2.8.178 FIN-9553-Q -- CMS Quarterly Accounts Receivable Report (Summary)

Reports the total outstanding A/R balance for each Federal fiscal year for the newly aged accounts and reports the total amount of payments or recoupments applied to the carry over accounts for the quarter.

SORT GROUP BY: NUM_CONTROL_AR, SAK_PAYEE, DTE_AR_LIABILITY, DTE_ADDED, CDE_PROV_TYPE, DSC_PROV_TYPE, ID_PROV_PRIMARY

2.8.178.1 Technical Name

FIN-9553-Q

2.8.178.2 Sort Order

FY End

Provider Type

2.8.178.3 CMS Quarterly Accounts Receivable Report (Summary) Layout

```
Report   : FIN-9553-Q                          COMMONWEALTH OF KENTUCKY                          Run Date: MM/DD/CCYY
Process  : FINJQ955                      MEDICAID MANAGEMENT INFORMATION SYSTEM                  Run Time:   99:99:99
Location: FINP9553                 CMS QUARTERLY ACCOUNTS RECEIVABLE REPORT (SUMMARY)                Page:       9999
                                                 QUARTER ENDING MM/DD/CCYY

 PROVIDER TYPE  XX  XXXXXXXXXXXXXXXXXXX

     FEDERAL FISCAL   PROVIDER      ACCTS RECEIVABLE            AMOUNT OF CASH PAYMENTS RECEIVED            WRITE
     YEAR END           TYPE        AGED OVER 60 DAYS           RECOUPMENTS AND ADJUSTMENTS APPLIED TO      OFF
                                                                PREVIOUSLY REPORTED ACCTS RECEIVABLE

     CCYY               XX          99,999,999.99                 99,999,999.99                       99,999,999.99
     CCYY               XX          99,999,999.99                 99,999,999.99                       99,999,999.99
     CCYY               XX          99,999,999.99                 99,999,999.99                       99,999,999.99
     CCYY               XX          99,999,999.99                 99,999,999.99                       99,999,999.99
```

2.8.178.4 Field Descriptions

Field	Description	Length	Data Type	DB Table	DB Attributes
Acct Receivable Aged Over 60 Days	The total quarter-end outstanding balance for each fiscal year of the newly aged accounts (accounts which became over 60 days old during the quarter being reported).	13	Number	N/A	Calculated Field

Field	Description	Length	Data Type	DB Table	DB Attributes
Amount Of Cash Payment Received Recoupments And Adjustments Applied To Previously Reported Acct Receivable	Total amount of cash payments received, recoupments or adjustments applied to previously reported accounts during the quarter being reported for each fiscal year.	13	Number	N/A	Calculated Field
Federal Fiscal Year End	The Federal fiscal year.	4	Number	N/A	Calculated Field
Provider Type	The provider type being reported	2	Number	T_PR_TYPE_CDE	DSC_PROV_TYPE
Provider Type	The provider type of the provider number associated with the account receivable and the provider type description.	2	Character	T_PR_TYPE_CDE	DSC_PROV_TYPE
Quarter Ending	The month, day, and year the quarter ended.	10	Date (MM/DD/CCYY)	N/A	N/A
Write Off	The total amount of write off's.	13	Number	N/A	Calculated Field

2.8.178.5 Associated Programs

Program	Description
finp9553	CMS Quarterly Accounts Receivable Report (Summary)

2.8.178.6 Associated Requirements

ID
30.090.009.003.1

2.8.178.7 Change Orders

ID	Name	Description
1171	Create CMS Quarterly AR reports	Create the legacy KYMC9550-R001, KYMC9550-R002, KYMC9550-R003 CMS Quarterly Accounts Receivable Reports
8842	FIN955* & 957* reports for 06/07	THE CMS QUARTERLY REPORTS NEED TO BE CORRECTED FOR QUARTER ENDING JUNE 2007. FUND CODE READING IN WRONG BY LOGIC FOR OCT, NOV AND DEC. ALSO A CONVERTED AR PAYMENT PLAN 3319865 FOR PROVIDER 33900218 REPORTED ON THE NEWLY AGED FOR THIS QUARTER AND LAST QUARTER WAS ON THE CARRYOVER. NEED NEW REPORT THIS AR SHOULD BE ON THE 9552 AS CARRYOVER WITH A MAY AND JUNE PAYMENT DISPOSITIONED AGAINST IT.

2.8.179 FIN-9571-Q -- CMS Quarterly Accounts Receivable Member Report - (Newly Aged)

This report displays and summarizes A/R Recipient information by recipient ID for newly aged accounts for the quarter, and it also reports information for Federal Fiscal Participation adjustments.

SORT GROUP BY NUM_CONTROL_AR, SAK_PAYEE, DTE_AR_LIABILITY, DTE_ADDED, ID_MEDICAID, DTE_FED_RPT

2.8.179.1 Technical Name

FIN-9571-Q

2.8.179.2 Sort Order

Member Number

2.8.179.3 CMS Quarterly Accounts Receivable Member Report - (Newly Aged) Layout

```
Report  : FIN-9571-Q                          COMMONWEALTH OF KENTUCKY                          Run Date: MM/DD/CCYY
Process : FINJQ975                      MEDICAID MANAGEMENT INFORMATION SYSTEM                  Run Time:   99:99:99
Location: FINP9571               CMS QUARTERLY ACCOUNTS RECEIVABLE MEMBER REPORT (NEWLY AGED)       Page:       9999
                                           QUARTER ENDING MM/DD/CCYY

  FEDERAL    MEMBER                MEMBER        BEGINNING     ACTIVITY   CANCELLATIONS CASH PAYMENTS  TOTAL AMOUNTS    BAL AS OF
  FYE        NAME                  NUMBER        BALANCE       DATE       AND/OR        AND/OR         RECEIVED  OR     END OF QUARTER
                                                                           ADJUSTMENTS   RECOUP RECVD   ADJUSTED IN QTR
MM/DD/CCYY  XXXXXXXXXXXXXXXXXXX   9999999999  99,999,999.990  MM/DD/CCYY 99,999,999.99  99,999,999.99  99,999,999.99  99,999,999.99
MM/DD/CCYY  XXXXXXXXXXXXXXXXXXX   9999999999  99,999,999.990  MM/DD/CCYY 99,999,999.99  99,999,999.99  99,999,999.99  99,999,999.99
MM/DD/CCYY  XXXXXXXXXXXXXXXXXXX   9999999999  99,999,999.990  MM/DD/CCYY 99,999,999.99  99,999,999.99  99,999,999.99  99,999,999.99
MM/DD/CCYY  XXXXXXXXXXXXXXXXXXX   9999999999  99,999,999.990  MM/DD/CCYY 99,999,999.99  99,999,999.99  99,999,999.99  99,999,999.99
MM/DD/CCYY  XXXXXXXXXXXXXXXXXXX   9999999999  99,999,999.990  MM/DD/CCYY 99,999,999.99  99,999,999.99  99,999,999.99  99,999,999.99
```

2.8.179.4 Field Descriptions

Field	Description	Length	Data Type	DB Table	DB Attributes
Activity Date	The date of the last transaction.	10	Number	T_AR_DISP	DTE_GENERIC
Bal As Of End Of Quarter	Balance of the account receivable for the end of the quarter.	13	Number	N/A	Calculated Field
Beginning Balance	The beginning balance amount of the member for the quarter.	13	Number	N/A	Calculated Field

Field	Description	Length	Data Type	DB Table	DB Attributes
Cancellations And/Or Adjustments	Dollar amount which was cancelled or adjusted for the quarter.	13	Date (MM/DD/CCYY)	N/A	N/A
Cash Payments And/Or Recoup Recvd	Total dollar amount received as cash payment for the quarter.	13	Number	N/A	Calculated Field
Federal FYE	The date the account receivable was set up.	10	Date (MM/DD/CCYY)	T_ACCT_REC	DTE_AR_LIABILITY
Member Name	The name of the member associated with the account receivable.	20	Character	T_RE_BASE	CONCATENATION
Member Number	The number of the member associated with the account receivable.	10	Number	T_RE_BASE	ID MEDICAID
Quarter Ending	The month, day, and year the quarter ended.	10	Date (MM/DD/CCYY)	N/A	N/A
Total Amounts Received Or Adjusted In QTR	Total of payments received and cancellations or adjustments.	13	Number	N/A	Calculated Field

2.8.179.5 Associated Programs

Program	Description
finp9571	CMS Quarterly Accounts Receivable Member Report - (Newly Aged)

2.8.179.6 Associated Requirements

ID
30.090.009.003.1

2.8.179.7 Change Orders

ID	Name	Description
1172	Create CMS Quarterly Member AR	Create the legacy KYMC9570-R001, KYMC9570-R002, KYMC9570-R003 CMS Quarterly Accounts Receivable Recipient Reports
8842	FIN955* & 957* reports for 06/07	THE CMS QUARTERLY REPORTS NEED TO BE CORRECTED FOR QUARTER ENDING JUNE 2007. FUND CODE READING IN WRONG BY LOGIC FOR OCT, NOV AND DEC. ALSO A CONVERTED AR PAYMENT PLAN 3319865 FOR PROVIDER 33900218 REPORTED ON THE NEWLY AGED FOR THIS QUARTER AND LAST QUARTER WAS ON THE CARRYOVER. NEED NEW REPORT THIS AR SHOULD BE ON THE 9552 AS CARRYOVER WITH A MAY AND JUNE PAYMENT DISPOSITIONED AGAINST IT.

2.8.180 FIN-9572-Q -- CMS Quarterly Accounts Receivable Member Report - (Carry Over)

This report displays and summarizes A/R Recipient information by recipient ID for carry over accounts for the quarter, and it also reports information for Federal Fiscal Participation adjustments.

SORT GROUP BY NUM_CONTROL_AR, SAK_PAYEE, DTE_AR_LIABILITY, DTE_ADDED, ID_MEDICAID, DTE_FED_RPT

2.8.180.1 Technical Name

FIN-9572-Q

2.8.180.2 Sort Order

Member Number

2.8.180.3 CMS Quarterly Accounts Receivable Member Report - (Carry Over) Layout

```
Report  : FIN-9572-Q                          COMMONWEALTH OF KENTUCKY                          Run Date: MM/DD/CCYY
Process : FINJQ975                      MEDICAID MANAGEMENT INFORMATION SYSTEM                  Run Time:   99:99:99
Location: FINP9572               CMS QUARTERLY ACCOUNTS RECEIVABLE MEMBER REPORT (CARRY OVER)        Page:       9999
                                              QUARTER ENDING MM/DD/CCYY

  FEDERAL    MEMBER                MEMBER        BEGINNING     ACTIVITY   CANCELLATIONS CASH PAYMENTS  TOTAL AMOUNTS    BAL AS OF
  FYE        NAME                  NUMBER        BALANCE       DATE       AND/OR        AND/OR         RECEIVED  OR     END OF QUARTER
                                                                           ADJUSTMENTS   RECOUP RECVD   ADJUSTED IN QTR
MM/DD/CCYY  XXXXXXXXXXXXXXXXXXX   9999999999  99,999,999.990  MM/DD/CCYY 99,999,999.99  99,999,999.99  99,999,999.99  99,999,999.99
MM/DD/CCYY  XXXXXXXXXXXXXXXXXXX   9999999999  99,999,999.990  MM/DD/CCYY 99,999,999.99  99,999,999.99  99,999,999.99  99,999,999.99
MM/DD/CCYY  XXXXXXXXXXXXXXXXXXX   9999999999  99,999,999.990  MM/DD/CCYY 99,999,999.99  99,999,999.99  99,999,999.99  99,999,999.99
MM/DD/CCYY  XXXXXXXXXXXXXXXXXXX   9999999999  99,999,999.990  MM/DD/CCYY 99,999,999.99  99,999,999.99  99,999,999.99  99,999,999.99
MM/DD/CCYY  XXXXXXXXXXXXXXXXXXX   9999999999  99,999,999.990  MM/DD/CCYY 99,999,999.99  99,999,999.99  99,999,999.99  99,999,999.99
```

2.8.180.4 Field Descriptions

Field	Description	Length	Data Type	DB Table	DB Attributes
Activity Date	Date a cash payment was processed.	10	Date (MM/DD/CCYY)	T_AR_DISP	DTE_GENERIC
Amount Reported	The beginning balance amount of the member for the quarter.	13	Number	N/A	Calculated Field
Bal As Of End Of Quarter	Balance of the account receivable for the end of the quarter.	13	Number	N/A	Calculated Field
Cancellations And/Or Adjustments	Dollar amount which was cancelled or adjusted for the quarter.	13	Number	N/A	Calculated Field

Field	Description	Length	Data Type	DB Table	DB Attributes
Cash Payments Recvd	Total dollar amount received as cash payment for the quarter.	13	Number	N/A	Calculated Field
Federal FYE	The date the account receivable was set up.	10	Date (MM/DD/CCYY)	T_ACCT_REC	DTE_AR_LIABILITY
Member Name	The name of the member associated with the account receivable.	20	Character	T_RE_BASE	CONCATENATION
Member Number	The number of the member associated with the account receivable.	10	Number	T_RE_BASE	ID MEDICAID
Quarter Ending	The month, day, and year the quarter ended.	10	Date (MM/DD/CCYY)	N/A	N/A
Total Amounts Received Or Adjusted In QTR	Total of payments received and cancellations or adjustments.	13	Number	N/A	Calculated Field

2.8.180.5 Associated Programs

Program	Description
finp9572	CMS Quarterly Accounts Receivable Member Report - (Carry Over)

2.8.180.6 Associated Requirements

ID
30.090.009.003.1

2.8.180.7 Change Orders

ID	Name	Description
1172	Create CMS Quarterly Member AR	Create the legacy KYMC9570-R001, KYMC9570-R002, KYMC9570-R003 CMS Quarterly Accounts Receivable Recipient Reports

ID	Name	Description
8842	FIN955* & 957* reports for 06/07	THE CMS QUARTERLY REPORTS NEED TO BE CORRECTED FOR QUARTER ENDING JUNE 2007. FUND CODE READING IN WRONG BY LOGIC FOR OCT, NOV AND DEC. ALSO A CONVERTED AR PAYMENT PLAN 3319865 FOR PROVIDER 33900218 REPORTED ON THE NEWLY AGED FOR THIS QUARTER AND LAST QUARTER WAS ON THE CARRYOVER. NEED NEW REPORT THIS AR SHOULD BE ON THE 9552 AS CARRYOVER WITH A MAY AND JUNE PAYMENT DISPOSITIONED AGAINST IT.

2.8.181 FIN-9573-Q -- CMS Quarterly Accounts Receivable Member Report - (Summary)

Reports the total outstanding A/R Recipient balance for each Federal fiscal year for the newly aged accounts and reports the total amount of payments applied to the carry over accounts for the quarter.

SORT GROUP BY NUM_CONTROL_AR, SAK_PAYEE, DTE_AR_LIABILITY, DTE_ADDED, ID_MEDICAID, DTE_FED_RPT

2.8.181.1 Technical Name

FIN-9573-Q

2.8.181.2 Sort Order

FY End

2.8.181.3 CMS Quarterly Accounts Receivable Member Report - (Summary) Layout

```
Report  : FIN-9573-Q                    COMMONWEALTH OF KENTUCKY                    Run Date: MM/DD/CCYY
Process : FINJQ957                MEDICAID MANAGEMENT INFORMATION SYSTEM            Run Time:   99:99:99
Location: FINP9573          CMS QUARTERLY ACCOUNTS RECEIVABLE MEMBER REPORT (SUMMARY)      Page:       9999
                                     QUARTER ENDING MM/DD/CCYY   SUMMARY

    FEDERAL FISCAL          ACCTS RECEIVABLE        AMOUNT OF CASH PAYMENTS RECEIVED        WRITE
    YEAR END                AGED OVER 60 DAYS       RECOUPMENTS AND ADJUSTMENTS APPLIED TO  OFF
                                                    PREVIOUSLY REPORTED ACCTS RECEIVABLE

    CCYY                    99,999,999.99              99,999,999.99                   99,999,999.99
    CCYY                    99,999,999.99              99,999,999.99                   99,999,999.99
    CCYY                    99,999,999.99              99,999,999.99                   99,999,999.99
    CCYY                    99,999,999.99              99,999,999.99                   99,999,999.99
```

2.8.181.4 Field Descriptions

Field	Description	Length	Data Type	DB Table	DB Attributes
Accts Receivable Aged Over 60 Days	The total quarter-end outstanding balance for each fiscal year of the newly aged accounts (accounts which became over 60 days old during the quarter being reported)	13	Number		Calculated Field
Amount Of Cash Payments Received and Adjustments Applied To Previously Reported Accts Receivable	Total amount of cash payments received or adjustments applied to previously reported accounts during the quarter being reported for each fiscal year.	13	Number		Calculated Field

Field	Description	Length	Data Type	DB Table	DB Attributes
Federal Fiscal Year End	The Federal Fiscal Year End.	4	Date (MM/DD/CCYY)	N/A	N/A
Quarter Ending	The month, day, and year the quarter ended.	10	Date (MM/DD/CCYY)	N/A	N/A
Write Off	The total amount of write off transactions	13	Number		Calculated Field

2.8.181.5 Associated Programs

Program	Description
finp9573	CMS Quarterly Accounts Receivable Member Report - (Summary)

2.8.181.6 Associated Requirements

ID
30.090.009.003.1

2.8.181.7 Change Orders

ID	Name	Description
1172	Create CMS Quarterly Member AR	Create the legacy KYMC9570-R001, KYMC9570-R002, KYMC9570-R003 CMS Quarterly Accounts Receivable Recipient Reports
8842	FIN955* & 957* reports for 06/07	THE CMS QUARTERLY REPORTS NEED TO BE CORRECTED FOR QUARTER ENDING JUNE 2007. FUND CODE READING IN WRONG BY LOGIC FOR OCT, NOV AND DEC. ALSO A CONVERTED AR PAYMENT PLAN 3319865 FOR PROVIDER 33900218 REPORTED ON THE NEWLY AGED FOR THIS QUARTER AND LAST QUARTER WAS ON THE CARRYOVER. NEED NEW REPORT THIS AR SHOULD BE ON THE 9552 AS CARRYOVER WITH A MAY AND JUNE PAYMENT DISPOSITIONED AGAINST IT.

2.8.182 FIN-ERR-W -- Financial Extractor Error Report

This report contains all claims that have failed edits in the financial batch cycle. The claims listed on the report were not able to be processed due to critical data problems that would make it impossible to process within financial.

2.8.182.1 Technical Name

FIN-ERR-W

2.8.182.2 Sort Order

Claim SAK

For readability, this report layout appears on the next two pages.

2.8.182.3 Financial Extractor Error Report Layout

```
Report  : FIN-ERR-W                          COMMONWEALTH OF KENTUCKY                                  Run Date: MM/DD/YYYY
Process : FINJWERR                       MEDICAID MANAGEMENT INFORMATION SYSTEM                        Run Time:   HH:MM:SS
Location: FINP_FLUSH_RPT                    FINANCIAL EXTRACTOR ERROR REPORT                               Page:      99999
                                              RUN DATE:  MM/DD/YYYY

                                                ENVIRONMENT:    XXXX
                                                DATABASE:    XXXXXX

  CLAIM      SAK      CLAIM        ICN         ERROR TYPE  ERROR   ERROR DESRIPTION
  TYPE                STATUS      NUMBER                   NUMBER


  XXXX    999999999     X      XXXXXXXXXXXXX   XXXXXXXXX   9999   XXXXXXXXXXXXXXXXXXXXXXXXXXXXXXXXXXXXXXXXXXXXXXXXXXXXXXXXXXXX
  XXXX    999999999     X      XXXXXXXXXXXXX   XXXXXXXXX   9999   XXXXXXXXXXXXXXXXXXXXXXXXXXXXXXXXXXXXXXXXXXXXXXXXXXXXXXXXXXXX
  XXXX    999999999     X      XXXXXXXXXXXXX   XXXXXXXXX   9999   XXXXXXXXXXXXXXXXXXXXXXXXXXXXXXXXXXXXXXXXXXXXXXXXXXXXXXXXXXXX
  XXXX    999999999     X      XXXXXXXXXXXXX   XXXXXXXXX   9999   XXXXXXXXXXXXXXXXXXXXXXXXXXXXXXXXXXXXXXXXXXXXXXXXXXXXXXXXXXXX
  XXXX    999999999     X      XXXXXXXXXXXXX   XXXXXXXXX   9999   XXXXXXXXXXXXXXXXXXXXXXXXXXXXXXXXXXXXXXXXXXXXXXXXXXXXXXXXXXXX
  XXXX    999999999     X      XXXXXXXXXXXXX   XXXXXXXXX   9999   XXXXXXXXXXXXXXXXXXXXXXXXXXXXXXXXXXXXXXXXXXXXXXXXXXXXXXXXXXXX
  XXXX    999999999     X      XXXXXXXXXXXXX   XXXXXXXXX   9999   XXXXXXXXXXXXXXXXXXXXXXXXXXXXXXXXXXXXXXXXXXXXXXXXXXXXXXXXXXXX
  XXXX    999999999     X      XXXXXXXXXXXXX   XXXXXXXXX   9999   XXXXXXXXXXXXXXXXXXXXXXXXXXXXXXXXXXXXXXXXXXXXXXXXXXXXXXXXXXXX
  XXXX    999999999     X      XXXXXXXXXXXXX   XXXXXXXXX   9999   XXXXXXXXXXXXXXXXXXXXXXXXXXXXXXXXXXXXXXXXXXXXXXXXXXXXXXXXXXXX
  XXXX    999999999     X      XXXXXXXXXXXXX   XXXXXXXXX   9999   XXXXXXXXXXXXXXXXXXXXXXXXXXXXXXXXXXXXXXXXXXXXXXXXXXXXXXXXXXXX
```

```
Report  : FIN-ERR-W                          COMMONWEALTH OF KENTUCKY                                  Run Date: MM/DD/YYYY
Process : FINJWERR                       MEDICAID MANAGEMENT INFORMATION SYSTEM                        Run Time:   HH:MM:SS
Location: FINP_FLUSH_RPT                    FINANCIAL EXTRACTOR ERROR REPORT                               Page:      99999
                                              RUN DATE:  MM/DD/YYYY

                                                ENVIRONMENT:    XXXX
                                                DATABASE:    XXXXXX

                                          * * *  S U M M A R Y   R E P O R T  * * *

  ERROR NUMBER   OCCURRENCE    DESCRIPTION
  ==========================================================================
    9999           99999       XXXXXXXXXXXXXXXXXXXXXXXXXXXXXXXXXXXXXXXXXXXXXXXXXXXXXXXXXXXX
    9999           99999       XXXXXXXXXXXXXXXXXXXXXXXXXXXXXXXXXXXXXXXXXXXXXXXXXXXXXXXXXXXX
    9999           99999       XXXXXXXXXXXXXXXXXXXXXXXXXXXXXXXXXXXXXXXXXXXXXXXXXXXXXXXXXXXX
    9999           99999       XXXXXXXXXXXXXXXXXXXXXXXXXXXXXXXXXXXXXXXXXXXXXXXXXXXXXXXXXXXX
    9999           99999       XXXXXXXXXXXXXXXXXXXXXXXXXXXXXXXXXXXXXXXXXXXXXXXXXXXXXXXXXXXX
    9999           99999       XXXXXXXXXXXXXXXXXXXXXXXXXXXXXXXXXXXXXXXXXXXXXXXXXXXXXXXXXXXX
```

```
NUMBER OF PAID      UB92 CLAIMS IN ERROR THIS RUN:       99999
NUMBER OF DENIED    UB92 CLAIMS IN ERROR THIS RUN:       99999
NUMBER OF SUSPENDED UB92 CLAIMS IN ERROR THIS RUN:       99999
NUMBER OF REJECTED  UB92 CLAIMS IN ERROR THIS RUN:       99999
                                                   -----------
    TOTAL NUMBER OF UB92 CLAIMS IN ERROR THIS RUN:       99999
-------------------------------------------------------------------------------------------------------------------------------

NUMBER OF PAID      DNTL CLAIMS IN ERROR THIS RUN:       99999
NUMBER OF DENIED    DNTL CLAIMS IN ERROR THIS RUN:       99999
NUMBER OF SUSPENDED DNTL CLAIMS IN ERROR THIS RUN:       99999
NUMBER OF REJECTED  DNTL CLAIMS IN ERROR THIS RUN:       99999
                                                   -----------
    TOTAL NUMBER OF DNTL CLAIMS IN ERROR THIS RUN:       99999
-------------------------------------------------------------------------------------------------------------------------------

NUMBER OF PAID      PHRM CLAIMS IN ERROR THIS RUN:       99999
NUMBER OF DENIED    PHRM CLAIMS IN ERROR THIS RUN:       99999
NUMBER OF SUSPENDED PHRM CLAIMS IN ERROR THIS RUN:       99999
NUMBER OF REJECTED  PHRM CLAIMS IN ERROR THIS RUN:       99999
                                                   -----------
    TOTAL NUMBER OF PHRM CLAIMS IN ERROR THIS RUN:       99999
-------------------------------------------------------------------------------------------------------------------------------

NUMBER OF PAID      PHYS CLAIMS IN ERROR THIS RUN:       99999
NUMBER OF DENIED    PHYS CLAIMS IN ERROR THIS RUN:       99999
NUMBER OF SUSPENDED PHYS CLAIMS IN ERROR THIS RUN:       99999
NUMBER OF REJECTED  PHYS CLAIMS IN ERROR THIS RUN:       99999
                                                   -----------
    TOTAL NUMBER OF PHYS CLAIMS IN ERROR THIS RUN:       99999
-------------------------------------------------------------------------------------------------------------------------------

    GRAND TOTAL OF CLAIMS IN ERROR THIS RUN:             99999

===============================================================================================================================

Report  : FIN-ERR-W                          COMMONWEALTH OF KENTUCKY                                    Run Date: MM/DD/YYYY
Process : FINJWERR                        MEDICAID MANAGEMENT INFORMATION SYSTEM                         Run Time:   HH:MM:SS
Location: FINP_FLUSH_RPT                     FINANCIAL EXTRACTOR ERROR REPORT                                 Page:      99999
                                               RUN DATE:  MM/DD/YYYY

                                                 ENVIRONMENT:    XXXX
                                                 DATABASE:    XXXXXX

                                          * * *  S U M M A R Y  R E P O R T  * * *


TOTAL AMOUNT OF PAID UB92 CLAIMS IN ERROR THIS RUN:     999,999,999.99
TOTAL AMOUNT OF PAID PHYS CLAIMS IN ERROR THIS RUN:     999,999,999.99
TOTAL AMOUNT OF PAID PHRM CLAIMS IN ERROR THIS RUN:     999,999,999.99
TOTAL AMOUNT OF PAID PHYS CLAIMS IN ERROR THIS RUN:     999,999,999.99
-------------------------------------------------------------------------------------------------------------------------------

                                                      ** END OF REPORT **
```

2.8.182.4 Field Descriptions

Field	Description	Length	Data Type	DB Table	DB Attributes
Claim Type	This is the type claim (PHYS, PHRM, DNTL, UB92)	4	Character	T_CLAIM_TYPE	DSC_CLM_TYP
Database	The related database the report was run against.	6	Character	N/A	N/A
Environment	The environment region that the report is generated for (ACC, MOD, PROD, TEST)	4	Character	N/A	N/A
Error Description	This is the description of the error.	100	Character	N/A	N/A
Error Num	This is the number assigned to the error which corresponds to the fin_error_code table.	4	Number	N/A	N/A
Error Type	This is the type of edit which error occurred in. (PROVIDER, CLAIM, FUND CODE, MEMBER.)	10	Character	N/A	N/A
ICN Number	This is the ICN of the claim as specified on the claim header.	13	Character	T_HIST_DIRECTORY	NUM_ICN
Number of Denied	This is the number of denied claims that occur on the report	9	Number	N/A	Calculated Field
Number of Paid	This is the number of paid claims that occur on the report	9	Number	N/A	Calculated Field
Number of Rejected	This is the number of rejected claims that occur on the report	9	Number	N/A	Calculated Field
Number of Suspended	This is the number of suspended claims that occur on the report	9	Number	N/A	Calculated Field
Occurrence	This is the frequency of which a given error occurs on the report.	9	Number	N/A	Calculated Field
Run Date	The date of the cycle on which the report was run for.	10	Date (MM/DD/CCYY)	N/A	N/A
SAK	This is the Sak of the claim in error.	9	Number (Integer)	T_HIST_DIRECTORY	SAK_CLAIM

Field	Description	Length	Data Type	DB Table	DB Attributes
Total Number of Dental	This is the total number claims in error for dental	9	Number	N/A	Calculated Field
Total Number of Error Messages	This is the total number of all error messages on the report. (This is not the total number of claims in error)	9	Number	N/A	Calculated Field
Total Number of Physician	This is the total number claims in error for physician.	9	Number	N/A	Calculated Field
Total Number of UB992	This is the total number claims in error for UB992.	9	Number	N/A	Calculated Field
Total Numer of Pharmacy	This is the total number claims in error for pharmacy.	9	Number	N/A	Calculated Field

2.8.182.5 Associated Programs

Program	Description
finp_flush_rpt	Extractor Error report

2.8.182.6 Associated Requirements

ID
30.090.009.003.1

2.8.182.7 Change Orders

ID	Name	Description
8946	FIN-ERR BALANCE TOTALS	The cycle report for the 8/10/2007 (run 8/12/2007) cycle is truncating the counts in the Summary Report area. Grand Total Claims in Error is reported as 14,796 but the Occurrence counts by Error number is 4,887 so the report does not balance.

2.8.183 FIN-RECID-W -- Financial Missing Receiver ID Error Report

This report lists the provider IDs that were errored off during the electronic RA creation process in FINJW201. These providers were supposed to get an electronic RA but were sent a paper RA because they did not have a receiver ID set up.

2.8.183.1 Technical Name

FIN-RECID-W

2.8.183.2 Sort Order

Provider ID

2.8.183.3 Financial Missing Receiver ID Error Report Layout

```
Report   : FIN-RECID-W                    COMMONWEALTH OF KENTUCKY                    Run Date: MM/DD/CCYY
Process  : FINJW285                 MEDICAID MANAGEMENT INFORMATION SYSTEM            Run Time:   HH:MM:SS
Location: FINP1045                 FINANCIAL MISSING RECIEVER ID ERROR REPORT            Page:      9,999
                                          MM/DD/CCYY-MM/DD/CCYY

PROVIDER NUMBER
9999999999

                                  ******* NO DATA THIS REPORT ******
```

2.8.183.4 Field Descriptions

Field	Description	Length	Data Type	DB Table	DB Attributes
Provider Number	This is provider ID number.	10	Number	T_PR_IDENTIFIER	ID_PROVIDER

2.8.183.5 Associated Programs

Program	Description
copy2routedir	Copy Reports to Router
finp1045	Missing Receiver ID Error report

2.8.183.6 Associated Requirements

ID
30.090.009.003.1

2.8.183.7 Change Orders

ID	Name	Description
No associated Change Orders found.		

2.9 Letters

Some information in this section is represented in table format. In order to fit information on the page, some data field information may wrap to the next line.

2.9.1 FIN-9120-R -- Provider Accounts Receivable Notification Letter

This report is generated online from the A/R Setup/Maintenance window.**T**he purpose of this letter is to inform the owner of the outstanding accounts receivable record displaying on the window.**T**he text for the letter will come from a Microsoft(R) word template, and the unique information related to the record will be plugged into the variables listed below.

2.9.1.1 Technical Name

FIN-9120-R

2.9.1.2 Provider Accounts Receivable Notification Letter Layout

9<Letter Head Goes Here>

Accounts Receivable with Balance Due

Statement Date: <<Date>>
Provider Number: <<Provider>>

Mailed to:

«Name»
«Address1»
«Address2»
«City», «State» «PostalCode»

This letter is to notify you that you have an outstanding AR setup in your name. This AR is open and payment is now due. Please attach the enclosed copy of this letter when remitting your payment. A second notice will be sent to you within 14 days if you have not contacted the Medical Assistance Customer Assistance Service Center.

```
=============================================================================
            Setup                     Original       Outstanding
Provider     Date       A/R Number     Amount          Balance
=============================================================================
##########  MM/DD/CCYY  ###########  $9,999,999.99  $9,999,999.99
##########  MM/DD/CCYY  ###########  $9,999,999.99  $9,999,999.99
```

Mail check and enclosed payment form to:

<Address Line 1>
<Address Line 2>
<Address Line 3>

Questions? Call the Medicaid Customer Service Unit at 9-999-999-9999.

If you disagree with this action, a written request for a fair hearing must be filed with the Office of Administrative Hearings within thirty-three days from the date we mailed this notice to you.

2.9.1.3 Field Descriptions

Field	Description	Length	Data Type	DB Table	DB Attributes
A/R Number	This is the number of the A/R.	13	Number	T_ACT_REC	SAK_ACT_REC
Address 1	This is the Provider's mailing address line 1.	30	Character	T_PR_ADR	ADR_MAIL_STRT1
Address 2	This is the Provider's mailing address line 2.	30	Character	T_PR_ADR	ADR_MAIL_STRT2
City State, Postal Code	This is the Provider's city 2 digit state and 5+4 zip code.	20	Character	T_PR_ADR	ADR_MAIL_CITY
Date	This is the date the A/R was generated in the following format: MONTH DD, CCYY.	30	Character	N/A	N/A
Name	This is the Provider's full name or business name.	50	Character	T_PR_NAM	NAME
Original Amount	This is the original setup amount.	11	Number	T_ACT_REC	DTE_AR_LIABILITY
Outstanding Balance	This is the balance of the A/R.	10	Number		Calculated Field
Provider	This is the ID of the Provider.	10	Character	T_PR_IDENTIFIER	ID_PROVIDER
Setup Date	This is the setup date of the A/R in the following format: Month DD, CCYY.	30	Character	T_ACT_REC	DTE_AR_LIABILITY

2.9.1.4 Associated Programs

Program	Description
No associated Programs found.	

2.9.1.5 Associated Requirements

ID
30.090.009.002.47

2.9.1.6 Change Orders

ID	Name	Description
1125	Modify the FIN-9120-D AR letter	Change the existing CORE report FIN-9120-D letter to meet the wording of the existing KYMC6600-R004 letter
4651	Financial Letters	Financial letters are produced out of MMIS but are not making it to OnBase.

2.9.2 FIN-9121-R -- Member Accounts Receivable Notification Letter

This report is generated online from the A/R Setup/Maintenance window.**T**he purpose of this letter is to inform the owner of the outstanding account receivable record displaying on the window.**T**he text for the letter will come from a Microsoft(R) word template, and the unique information related to the record will be plugged into the variables listed below.

2.9.2.1 Technical Name

FIN-9121-R

2.9.2.2 Member Accounts Receivable Notification Letter Layout

{Cycle Date}

{Name}
{Address 1}
{Address 2}
{City}, {ST} {Zip Code}-{Zip Code 4}

Medicaid ID: **{Medicaid ID}**

Subject: Accounts Receivable record: **{A/R Number}**

Dear Sir or Madam:

This letter is to notify you that we currently have an account receivable record with an outstanding balance of **{$Balance}** set up in your name. The above account receivable was originally set up for the amount of **{$Setup Amount}** on **{Setup date}**. Please contact us for information on how to close this account.

xxxxxxxxxxxxxxxxxxxxxxxxx
xxxxxxxxxxxxxxxxxxxxxxxxxxxxxxxxxxxx
xxxxxxxxxxxxxxxxxxxxxxxxxxxxxxxxx

Sincerely,

EDS
Adjustments/Finance Unit

Enclosure

2.9.2.3 Field Descriptions

Field	Description	Length	Data Type	DB Table	DB Attributes
A/R number	This is the Number of the A/R.	13	Character	T_ACT_REC	SAK_ACT_REC
Address 1	This is the Member's mailing address line 1.	30	Character	T_PR_ADR	ADR_MAIL_STRT 1
Address 2	This is the Member's mailing address line 2.	30	Character	T_PR_ADR	ADR_MAIL_STRT 2
Balance	This is the balance of the A/R.	10	Number		CALCULATED FIELD
City St, Zip5 + Zip4	This is the Member's city, 2 digit state and 5+4 zip code.	20	Character	T_PR_ADR	ADR_MAIL_CITY
Cycle Date	This is the date the A/R was generated in the following format: MONTH DD, CCYY.	20	Character	N/A	N/A
Member Number	This is the Medicaid ID for the Member.	12	Character	T_RE_BASE	ID MEDICAID
Name	This is the full name of the name of the member in the following format: First Middle Init Last	20	Character	T_PR_NAM	NAME
Setup Amount	This is the original setup amount.	10	Number	T_ACT_REC	AT_SETUP
Setup Date	This is the setup date of the A/R in the following format: Month DD, CCYY.	30	Character	T_ACT_REC	DTE_AR_LIABILI TY

2.9.2.4 Associated Programs

Program	Description
No associated Programs found.	

2.9.2.5 Associated Requirements

ID
30.090.009.002.47

2.9.2.6 Change Orders

ID	Name	Description
None.		

2.9.3 FIN-9124-M -- Provider Accounts Receivable Notification Letter One

This report is generated in the batch cycle.**T**he purpose of this letter is to inform the owner of the outstanding accounts receivable record.**T**he text for the letter will come from a Microsoft(R) word template, and the unique information related to the record will be plugged into the variables listed below.

2.9.3.1 Technical Name

FIN-9124-M

2.9.3.2 Provider Accounts Receivable Notification Letter One Layout

{Date}

{Provider Name} {Provider Number}
{Address 1}
{Address 2}
{City}, {ST} {Zip Code}-{Zip Code 4}

Dear Provider:

This letter is a follow up to the demand letter sent {AR Letter Date}. More than sixty (60) days have passed since the date on the original demand letter regarding the ${AR Original Amount} owed to the Department for Medicaid Services (DMS) for {AR Reason Code Description – if cost settlement, insert cost settlement FYE also}. The remaining balance of ${AR Balance} on AR #{AR number} is considered due immediately.

If you are a **Non-Pharmacy Provider**, please mail a check made payable to Kentucky State Treasurer, along with a copy of this letter to the following address within fifteen (15) days from the date on this letter.

EDS
P O Box 2108
Frankfort, KY 40602

If you are a **Pharmacy Provider**, please mail a check made payable to First Health Services Corporation, along with a copy of this letter to the following address within fifteen (15) days from the date on this letter.

First Health Services Corporation
Attention: Finance Department
4240 Cox Road
Richmond, VA 23060

Failure to respond to this letter in a timely fashion may result in the Department for Medicaid Services taking any action at its disposal for the purpose of collecting this outstanding debt. Questions relating to your account receivable should be directed to the Financial Management Branch at (502)564-8217.

2.9.3.3 Field Descriptions

Field	Description	Length	Data Type	DB Table	DB Attributes
AR Balance	This is the Balance of the A/R.	10	Number		Calculated Field
AR Letter Date	This is the setup date of the A/R in the following format: Month DD, CCYY.	10	Character	T_ACT_REC	DTE_AR_LIABILITY
AR Original Amount	This is the original setup amount.	11	Number	T_ACT_REC	AT_SETUP
AR Reason Code Description	This is the reason the AR was created.	20	Character	T_ACT_REC	CDE_REASON_FOUR
AR number	This is the number of the A/R	13	Character	T_ACT_REC	SAK_ACT_REC
Address 1	This is the Provider's mailing address line 1.	30	Character	T_PR_ADR	ADR_MAIL_STRT1
Address 2	This is the Provider's mailing address line 2.	30	Character	T_PR_ADR	ADR_MAIL_STRT2
City State, Postal Code	This is the Provider's city 2 digit state and 5+4 zip code	20	Character	T_PR_ADR	ADR_MAIL_CITY
Date	This is the date the A/R was generated in the following format: MONTH DD, CCYY.	30	Character	N/A	N/A
Provider Name	This is the Provider's full name or business name.	50	Character	T_PR_NAM	NAME
Provider Number	This is the ID of the Provider and the provider's service location.	10	Character	T_PR_IDENTIFIER	ID_PROVIDER

2.9.3.4 Associated Programs

Program	Description
No associated Programs found.	

2.9.3.5 Associated Requirements

ID
30.090.009.002.47

2.9.3.6 Change Orders

ID	Name	Description
4651	Financial Letters	Financial letters are produced out of MMIS but are not making it to OnBase.
611	Reports "CLIENT" to "MEMBER"	There is a need to change the "CLIENT" text to "MEMBER" for all Financial reports visible to the commonwealth.

2.9.4 FIN-9125-M -- Provider Accounts Receivable Notification Letter Two

This report is generated in the batch cycle.**T**he purpose of this letter is to inform the owner of the outstanding accounts receivable record.**T**he text for the letter will come from a Microsoft(R) word template, and the unique information related to the record will be plugged into the variables listed below.

2.9.4.1 Technical Name

FIN-9125-M

2.9.4.2 Provider Accounts Receivable Notification Letter Two Layout

{Date}

Second Notice
Second Notice

{Provider Name}
{Address 1}
{Address 2}
{City}, {ST} {Zip Code}-{Zip Code 4}

Re: Provider #{Provider ID}

Dear Provider:

This letter is to notify you that you have an outstanding AR setup in your name. This AR is open and payment is now due. Please attach a copy of this letter when remitting your payment.

AR Original Amount: $ {AR Original Amount}
Outstanding Balance: $ {AR Balance}
AR Number: {AR number}
AR Date: {AR Letter Date}
AR Reason: {AR Reason Code Desc–if cost settlement, insert cost sett FYE also}

Mail payment and letter copy to:
If you are a **Non-Pharmacy Provider** (check payable to Kentucky State Treasurer)
EDS
P O Box 2108
Frankfort, KY 40602

If you are a **Pharmacy Provider** (check payable to First Health Services Corporation)
First Health Services Corporation
Attention: Finance Department
4240 Cox Road
Richmond, VA 23060

Questions relating to your account receivable should be directed to the Financial Management Branch at (502)564-8217.

2.9.4.3 Field Descriptions

Field	Description	Length	Data Type	DB Table	DB Attributes
AR Balance	This is the Balance of the A/R.	10	Number		Calculated Field
AR Letter Date	This is the setup date of the	10	Char	T_ACT_REC	DTE_AR_LIABILITY
AR Original Amount	This is the original setup amount.	10	Number		Calculated Field
AR Reason Code Desc	This is the reason the AR was created.	20	Character	T_ACT_REC	CDE_REASON_FOUR
AR number	This is the number of the A/R	13	Char	T_ACT_REC	num_control_num
Address 1	This is the first line of the providers address.	30	Char	T_PR_ADR	ADR_MAIL_STT_1
Address 2	This is the second line of the providers address.	30	Character	T_PR_ADR	ADR_MAIL_STT_2
City State, Postal Code	This is the city, state and zip code of the provider.	20	Char	T_PR_ADR	ADR_MAIL_CITY
Date	This is the date the letter was generated.	10	Char	N/A	N/A
Provider ID	This is the ID of the Provider and the provider's service location.	10	Character	T_PR_IDENTIFIER	ID_PROVIDER
Provider Name	This is the name of the provider.	50	Char	T_FIN_PROCESS_PROV_ID	NAME

2.9.4.4 Associated Programs

Program	Description
No associated Programs found.	

2.9.4.5 Associated Requirements

ID
No associated Requirements found.

2.9.4.6 Change Orders

ID	Name	Description
None.		

2.9.5 FIN-9126-M -- Provider Accounts Receivable Notification Letter Three

This report is generated in the batch cycle.**T**he purpose of this letter is to inform the owner of the outstanding accounts receivable record.**T**he text for the letter will come from a Microsoft(R) word template, and the unique information related to the record will be plugged into the variables listed below.

2.9.5.1 Technical Name

FIN-9126-M

2.9.5.2 Provider Accounts Receivable Notification Letter Three Layout

{Date}

Third Notice
Third Notice
Third Notice

{Provider Name}
{Address 1}
{Address 2}
{City}, {ST} {Zip Code}-{Zip Code 4}

Re: Provider #{Provider ID}

Dear Provider:

This letter is to notify you that you have an outstanding AR setup in your name. This AR is open and payment is now due. Please attach a copy of this letter when remitting your payment.

AR Original Amount: $ {AR Original Amount}
Outstanding Balance: $ {AR Balance}
AR Number: {AR number}
AR Date: {AR Letter Date}
AR Reason: {AR Reason Code Desc–if cost settlement, insert cost sett FYE also}

Mail payment and letter copy to:
If you are a **Non-Pharmacy Provider** (check payable to Kentucky State Treasurer)
EDS
P O Box 2108
Frankfort, KY 40602

If you are a **Pharmacy Provider** (check payable to First Health Services Corporation)
First Health Services Corporation
Attention: Finance Department
4240 Cox Road
Richmond, VA 23060

Questions relating to your account receivable should be directed to the Financial Management Branch at (502)564-8217.

2.9.5.3 Field Descriptions

Field	Description	Length	Data Type	DB Table	DB Attributes
AR Balance	This is the Balance of the A/R.	10	Number		Calculated Field
AR Letter Date	This is the setup date of the	10	Char	T_ACT_REC	DTE_AR_LIABILITY
AR Original Amount	This is the original setup amount.	10	Number		Calculated Field
AR Reason Code Desc	This is the reason the AR was created.	20	Character	T_ACT_REC	CDE_REASON_FOUR
AR number	This is the number of the A/R	13	Char		num_control_num
Address 1	This is the first line of the providers address.	30	Char	T_PR_ADR	ADR_MAIL_STT_1
Address 2	This is the second line of the providers address.	30	Character	T_PR_ADR	ADR_MAIL_STT_2
City State, Postal Code	This is the city, state and zip code of the provider.	20	Char	T_PR_ADR	ADR_MAIL_CITY
Date	This is the date the letter was generated.	10	Char	N/A	N/A
Provider ID	This is the ID of the Provider and the provider's service location.	10	Character	T_PR_IDENTIFIER	ID_PROVIDER
Provider Name	This is the name of the provider.	50	Char	T_FIN_PROCESS_PROV_ID	NAME

2.9.5.4 Associated Programs

Program	Description
No associated Programs found.	

2.9.5.5 Associated Requirements

ID
No associated Requirements found.

2.9.5.6 Change Orders

ID	Name	Description
None.		

2.9.6 FIN-9127-M -- Member Accounts Receivable Notification Letter One

This report is generated in the batch cycle.**T**he purpose of this letter is to inform the owner of the outstanding accounts receivable record.**T**he text for the letter will come from a Microsoft(R) word template, and the unique information related to the record will be plugged into the variables listed below.

2.9.6.1 Technical Name

FIN-9127-M

2.9.6.2 Member Accounts Receivable Notification Letter One Layout

{Date}

{Member Name} {Member Number}
{Address 1}
{Address 2}
{City}, {ST} {Zip Code}-{Zip Code 4}

Dear Member:

This letter is a follow up to the demand letter sent {AR Letter Date}. More than sixty (60) days have passed since the date on the original demand letter regarding the ${AR Original Amount} owed to the Department for Medicaid Services (DMS) for {AR Reason Code Description}. The remaining balance of ${AR Balance} on AR #{AR number} is considered due immediately.

Please mail a check made payable to Kentucky State Treasurer, along with a copy of this letter to the following address within fifteen (15) days from the date on this letter.

EDS
P O Box 2108
Frankfort, KY 40602

Failure to respond to this letter in a timely fashion may result in the Department for Medicaid Services taking any action at its disposal for the purpose of collecting this outstanding debt. Questions relating to your account receivable should be directed to the Financial Management Branch at (502)564-8217.

2.9.6.3 Field Descriptions

Field	Description	Length	Data Type	DB Table	DB Attributes
AR Balance	This is the Balance of the A/R.	10	Number		Calculated Field
AR Letter Date	This is the setup date of the	10	Char	T_ACT_REC	DTE_AR_LIABILITY
AR Original Amount	This is the original setup amount.	10	Number		Calculated Field
AR Reason Code Desc	This is the reason the AR was created.	20	Character	T_ACT_REC	CDE_REASON_FOUR
AR number	This is the number of the A/R	13	Char	T_ACT_REC	num_control_num
Address 1	This is the first line of the member address.	30	Char	T_RECIP	ADR_MAIL_STT_1
Address 2	This is the second line of the member address.	30	Character	T_RECIP	ADR_MAIL_STT_2
City State, Postal Code	This is the city, state and zip code of the member.	20	Char	T_PR_ADR	ADR_MAIL_CITY
Date	This is the date the letter was generated.	10	Char	N/A	N/A
Member ID	This is the identification number of the member.	10	Character	T_RECIP	MEDICAID_ID
Member Name	This is the name of the member.	50	Char	T_RE_BASE	NAME

2.9.6.4 Associated Programs

Program	Description
No associated Programs found.	

2.9.6.5 Associated Requirements

ID
No associated Requirements found.

2.9.6.6 Change Orders

ID	Name	Description
None.		

2.9.7 FIN-9128-M -- Member Accounts Receivable Notification Letter Two

This report is generated in the batch cycle.**T**he purpose of this letter is to inform the owner of the outstanding accounts receivable record.**T**he text for the letter will come from a Microsoft(R) word template, and the unique information related to the record will be plugged into the variables listed below.

2.9.7.1 Technical Name

FIN-9128-M

2.9.7.2 Member Accounts Receivable Notification Letter Two Layout

{Date}

Second Notice
Second Notice

{Member Name}
{Address 1}
{Address 2}
{City}, {ST} {Zip Code}-{Zip Code 4}

Re: Member #{Member ID}

Dear Member:

This letter is to notify you that you have an outstanding AR setup in your name. This AR is open and payment is now due. Please attach a copy of this letter when remitting your payment.

AR Original Amount: $ {AR Original Amount}
Outstanding Balance: $ {AR Balance}
AR Number: {AR number}
AR Date: {AR Letter Date}
AR Reason: {AR Reason Code Desc}

Mail payment (check payable to Kentucky State Treasurer) and letter copy to:
EDS
P O Box 2108
Frankfort, KY 40602

Questions relating to your account receivable should be directed to the Financial Management Branch at (502)564-8217.

2.9.7.3 Field Descriptions

Field	Description	Length	Data Type	DB Table	DB Attributes
AR Balance	This is the Balance of the A/R.	10	Number		Calculated Field
AR Letter Date	This is the setup date of the	10	Char	T_ACT_REC	DTE_AR_LIABILITY
AR Original Amount	This is the original setup amount.	10	Number		Calculated Field
AR Reason Code Desc	This is the reason the AR was created.	20	Character	T_ACT_REC	CDE_REASON_FOUR
AR number	This is the number of the A/R	13	Char	T_ACT_REC	num_control_num
Address 1	This is the first line of the member address.	30	Char	T_RECIP	ADR_MAIL_STT_1
Address 2	This is the second line of the member address.	30	Character	T_RECIP	ADR_MAIL_STT_2
City State, Postal Code	This is the city, state and zip code of the member.	20	Char	T_PR_ADR	ADR_MAIL_CITY
Date	This is the date the letter was generated.	10	Char	N/A	N/A
Member ID	This is the identification number of the member.	10	Character	T_RECIP	MEDICAID_ID
Member Name	This is the name of the member.	50	Char	T_RE_BASE	NAME

2.9.7.4 Associated Programs

Program	Description
No associated Programs found.	

2.9.7.5 Associated Requirements

ID
No associated Requirements found.

2.9.7.6 Change Orders

ID	Name	Description
None.		

2.9.8 FIN-9129-M -- Member Accounts Receivable Notification Letter Three

This report is generated in the batch cycle.**T**he purpose of this letter is to inform the owner of the outstanding accounts receivable record.**T**he text for the letter will come from a Microsoft(R) word template, and the unique information related to the record will be plugged into the variables listed below.

2.9.8.1 Technical Name

FIN-9129-M

2.9.8.2 Member Accounts Receivable Notification Letter Three Layout

{Date}

THIRD NOTICE
THIRD NOTICE

{Member Name}
{Address 1}
{Address 2}
{City}, {ST} {Zip Code}-{Zip Code 4}

Re: Member #{Member ID}

Dear Member:

To date, full payment for this outstanding AR has not been received. If payment is not received within 30 days from the date of this letter, all legal avenues of collection will be pursued, including the option of referring the matter to the Office of the General Counsel.

AR Original Amount: ${AR Original Amount}
Outstanding Balance: ${AR Balance}
AR Number: {AR number}
AR Date: {AR Letter Date}
AR Reason: {AR Reason Code Desc}

Mail payment (check payable to Kentucky State Treasurer) and letter copy to:
EDS
P O Box 2108
Frankfort, KY 40602

Questions relating to your account receivable should be directed to the Financial Management Branch at (502)564-8217.

2.9.8.3 Field Descriptions

Field	Description	Length	Data Type	DB Table	DB Attributes
AR Balance	This is the Balance of the A/R.	10	Number		Calculated Field
AR Letter Date	This is the setup date of the	10	Char	T_ACT_REC	DTE_AR_LIABILITY
AR Original Amount	This is the original setup amount.	10	Number		Calculated Field
AR Reason Code Desc	This is the reason the AR was created.	20	Character	T_ACT_REC	CDE_REASON_FOUR
AR number	This is the number of the A/R	13	Char	T_ACT_REC	num_control_num
Address 1	This is the first line of the member address.	30	Char	T_RECIP	ADR_MAIL_STT_1
Address 2	This is the second line of the member address.	30	Character	T_RECIP	ADR_MAIL_STT_2
City State, Postal Code	This is the city, state and zip code of the member.	20	Char	T_PR_ADR	ADR_MAIL_CITY
Date	This is the date the letter was generated.	10	Char	N/A	N/A
Member ID	This is the identification number of the member.	10	Character	T_RECIP	MEDICAID_ID
Member Name	This is the name of the member.	50	Char	T_RE_BASE	NAME

2.9.8.4 Associated Programs

Program	Description
No associated Programs found.	

2.9.8.5 Associated Requirements

ID
No associated Requirements found.

2.9.8.6 Change Orders

ID	Name	Description
None.		

2.9.9 FIN-9130-R -- Provider Stop Payment Letter

This report is generated in the batch system.**T**he purpose of this letter is to inform the owner of the check that was requested to be stopped.**T**he text for the letter will come from a Microsoft(R) word template, and the unique information related to the record will be plugged into the variables listed below.

2.9.9.1 Technical Name

FIN-9130-R

For readability, the layout displays on the following page.

2.9.9.2 Provider Stop Payment Letter Layout

{Date}

{Provider Name}
{Address 1}
{Address 2}
{City}, {ST} {Zip Code}-{Zip Code 4}

Provider ID: {Provider ID}

Subject: Stop Payment Request

Dear Provider:

This letter is in response to your request for a stop payment on check #{check number} for $ {expenditure amount} dated {expenditure date}. Please complete the enclosed affidavit so that a duplicate check may be issued. The affidavit must be notarized and returned to the following address for processing:

Kentucky State Treasury
Attention: Stop Payments
1050 US 127 S., Ste 100
Frankfort, KY 40601

If you have any questions regarding the expenditure payment, please contact EDS Provider Relations at (800)807-1232. For questions regarding the affidavit, contact the Financial Management Branch at (502)564-8217.

Sincerely,

Steve Bechtel, Supervisor
Accounts Receivable Section

Enclosure

Affidavit

Check Number: {Check Number}

Payee Name: {Payee Name}

Amount of Check: $ {Expenditure Amount}

Date of Check: {Expenditure Date}

Stop Payment Date:

Whereas, the Treasurer of the Commonwealth of Kentucky issued the above described check on the Farmers Bank and Capital Trust Company, and said check has been either lost or stolen; and

Whereas, the above-named payee(s) has received no benefit from said check and now desires a duplicate pursuant to the provisions of KSR 41.375.

Now, therefore, I/we,_____(print or type Payee(s) name) in consideration of the issuance of said duplicate, do hereby agree to make good any loss the Commonwealth or the Treasurer may sustain on account of the duplicate or the presentation and payment of the original, if the loss has been caused by actions of the payee.

_____
Signature of legal payee (Individuals signing for businesses should identify position.)

_____
(Second payee, if applicable)

Notary Certificate

STATE OF_____
COUNTY OF_____

Subscribed and sworn before me by _____
This_____day of _____20____.

_____
(Notary Public)

My Commission expires_____.

2.9.9.3 Field Descriptions

Field	Description	Length	Data Type	DB Table	DB Attributes
Address 1	This is the first line of the providers address.	30	Char	T_PR_ADR	ADR_MAIL_STT_1
Address 2	This is the second line of the providers address.	30	Character	T_PR_ADR	ADR_MAIL_STT_2
Check Number	This is the check number of the stopped check.	9	Number	T_CHECK	NUM_CHECK
City State, Postal Code	This is the city, state and zip code of the provider.	20	Char	T_PR_ADR	ADR_MAIL_CITY
Date	This is the date the letter was generated.	10	Char	N/A	N/A
Expenditure Amount	This is the amount of the check.	13	Number	T_CHECK	AT_PAID
Expenditure Date	This is the date the check was originally issued.	10	Char	T_CHECK	ISSUE_DATE
Provider ID	This is the provider identification number.	10	Char	T_FIN_PROCESS_PROV_ID	PROV_PRIMARY_ID
Provider Name	This is the name of the provider.	50	Char	T_FIN_PROCESS_PROV_ID	NAME

2.9.9.4 Associated Programs

Program	Description
No associated Programs found.	

2.9.9.5 Associated Requirements

ID
No associated Requirements found.

2.9.9.6 Change Orders

ID	Name	Description
None.		

2.9.10 FIN-9131-R -- Carrier Stop Payment Letter

This report is generated in the batch system.**T**he purpose of this letter is to inform the owner of the check that was requested to be stopped.**T**he text for the letter will come from a Microsoft(R) word template, and the unique information related to the record will be plugged into the variables listed below.

2.9.10.1 Technical Name

FIN-9131-R

For readability, the layout displays on the following page.

2.9.10.2 Carrier Stop Payment Letter Layout

{Date}

{Carrier Name}
{Address 1}
{Address 2}
{City}, {ST} {Zip Code}-{Zip Code 4}

Carrier ID: {Carrier ID}

Subject: Stop Payment Request

Dear Carrier:

This letter is in response to your request for a stop payment on check #{check number} for ${expenditure amount} dated {expenditure date}. Please complete the enclosed affidavit so that a duplicate check may be issued. The affidavit must be notarized and returned to the following address for processing:

Kentucky State Treasury
Attention: Stop Payments
1050 US 127 S., Ste 100
Frankfort, KY 40601

If you have any questions regarding the expenditure payment, please contact EDS TPL Unit at (800)807-1459. For questions regarding the affidavit, contact the Financial Management Branch at (502)564-8217.

Sincerely,

Steve Bechtel, Supervisor
Accounts Receivable Section

Enclosure

Affidavit

Check Number: {Check Number}

Payee Name: {Payee Name}

Amount of Check: ${Expenditure Amount}

Date of Check: {Expenditure Date}

Stop Payment Date:

Whereas, the Treasurer of the Commonwealth of Kentucky issued the above described check on the Farmers Bank and Capital Trust Company, and said check has been either lost or stolen; and

Whereas, the above-named payee(s) has received no benefit from said check and now desires a duplicate pursuant to the provisions of KSR 41.375.

Now, therefore, I/we,_____(print or type Payee(s) name) in consideration of the issuance of said duplicate, do hereby agree to make good any loss the Commonwealth or the Treasurer may sustain on account of the duplicate or the presentation and payment of the original, if the loss has been caused by actions of the payee.

_____
Signature of legal payee (Individuals signing for businesses should identify position.)

_____
(Second payee, if applicable)

Notary Certificate

STATE OF_____
COUNTY OF_____

Subscribed and sworn before me by _____
This_____day of _____20____.

_____
(Notary Public)

My Commission expires_____.

2.9.10.3 Field Descriptions

Field	Description	Length	Data Type	DB Table	DB Attributes
Address 1	This is the first line of the carriers address.	30	Char	T_TPL_CARRIER	ADR_MAIL_STT_1
Address 2	This is the second line of the carrier address.	30	Character	T_TPL_CARRIER	ADR_MAIL_STT_2
Carrier ID	This is the carrier number.	10	Char	T_TPL_CARRIER	CARRIER_ID
Carrier Name	This is the name of the carrier.	50	Char	T_TPL_CARRIER	NAME
Check Number	This is the check number of the stopped check.	9	Number	T_CHECK	NUM_CHECK
City State, Postal Code	This is the city, state and zip code of the carrier.	20	Char	T_TPL_CARRIER	ADR_MAIL_CITY
Date	This is the date the letter was generated.	10	Char	N/A	N/A
Expenditure Amount	This is the amount of the check.	13	Number	T_CHECK	AT_PAID
Expenditure Date	This is the date the check was originally issued.	10	Char	T_CHECK	ISSUE_DATE

2.9.10.4 Associated Programs

Program	Description
No associated Programs found.	

2.9.10.5 Associated Requirements

ID
No associated Requirements found.

2.9.10.6 Change Orders

ID	Name	Description
None.		

2.9.11 FIN-9132-R -- Non-Prov Stop Payment letter

This report is generated in the batch system.**T**he purpose of this letter is to inform the owner of the check that was requested to be stopped.**T**he text for the letter will come from a Microsoft(R) word template, and the unique information related to the record will be plugged into the variables listed below.

2.9.11.1 Technical Name

FIN-9132-R

For readability, the layout displays on the following page.

2.9.11.2 Non-Prov Stop Payment Letter Layout

{Date}

{Payee Name}
{Address 1}
{Address 2}
{City}, {ST} {Zip Code}-{Zip Code 4}

Payee ID: {Payee ID}

Subject: Stop Payment Request

Dear Payee:

This letter is in response to your request for a stop payment on check #{check number} for ${expenditure amount} dated {expenditure date}. Please complete the enclosed affidavit so that a duplicate check may be issued. The affidavit must be notarized and returned to the following address for processing:

Kentucky State Treasury
Attention: Stop Payments
1050 US 127 S., Ste 100
Frankfort, KY 40601

For questions regarding the affidavit, contact the Financial Management Branch at (502)564-8217.

Sincerely,

Steve Bechtel, Supervisor
Accounts Receivable Section

Enclosure

Affidavit

Check Number: {Check Number}

Payee Name: {Payee Name}

Amount of Check: ${Expenditure Amount}

Date of Check: {Expenditure Date}

Stop Payment Date:

Whereas, the Treasurer of the Commonwealth of Kentucky issued the above described check on the Farmers Bank and Capital Trust Company, and said check has been either lost or stolen; and

Whereas, the above-named payee(s) has received no benefit from said check and now desires a duplicate pursuant to the provisions of KSR 41.375.

Now, therefore, I/we,_____(print or type Payee(s) name) in consideration of the issuance of said duplicate, do hereby agree to make good any loss the Commonwealth or the Treasurer may sustain on account of the duplicate or the presentation and payment of the original, if the loss has been caused by actions of the payee.

_____
Signature of legal payee (Individuals signing for businesses should identify position.)

_____
(Second payee, if applicable)

Notary Certificate

STATE OF_____
COUNTY OF_____

Subscribed and sworn before me by _____
This_____day of _____20____.

_____
(Notary Public)

My Commission expires_____.

2.9.11.3 Field Descriptions

Field	Description	Length	Data Type	DB Table	DB Attributes
Address 1	This is the first line of the payee address.	30	Char	T_FIN_NONPROV	ADR_MAIL_STT_1
Address 2	This is the second line of the payee address.	30	Character	T_FIN_NONPROV	ADR_MAIL_STT_2
Check Number	This is the check number of the stopped check.	9	Number	T_CHECK	NUM_CHECK
City State, Postal Code	This is the city, state and zip code of the payee.	20	Char	T_FIN_NONPROV	ADR_MAIL_CITY
Date	This is the date the letter was generated.	10	Char	N/A	N/A
Expenditure Amount	This is the amount of the check.	13	Number	T_CHECK	AT_PAID
Expenditure Date	This is the date the check was originally issued.	10	Char	T_CHECK	ISSUE_DATE
Payee ID	This is the payee identification number.	10	Char	T_FIN_NONPROV	SAK_PAYEE
Payee Name	This is the name of the payee.	50	Char	T_PR_NONPROV	NAME

2.9.11.4 Associated Programs

Program	Description
No associated Programs found.	

2.9.11.5 Associated Requirements

ID
No associated Requirements found.

2.9.11.6 Change Orders

ID	Name	Description
None.		

2.9.12 FIN-9133-R -- Provider Reissue Letter

This report is generated in the batch system.**T**he purpose of this letter is to inform the owner of the check that was requested to be reissued.**T**he text for the letter will come from a Microsoft(R) word template, and the unique information related to the record will be plugged into the variables listed below.

2.9.12.1 Technical Name

FIN-9133-R

2.9.12.2 Provider Reissue Letter Layout

{Date}

{Provider Name}
{Address 1}
{Address 2}
{City}, {ST} {Zip Code}-{Zip Code 4}

Provider ID: {Provider ID}

Subject: Reissue Check #{Reissued Check #}

Dear Provider:

This letter is to notify you that we are sending you a replacement check in the amount of ${Check Amount}.

Original Payment Number: {Original Payment Number}
Original Payment Amount: ${Original Payment Amount}
Original Payment Date: {Original Payment Date}
Reissue reason: {Reissue Reason}

If you have any questions regarding the Remittance Advice, please contact EDS Provider Relations at (800)807-1232. For questions regarding the reissued check, contact the Financial Management Branch at (502)564-8217.

Sincerely,

Neville Wise, Director
Division of Administration and Financial Management

Enclosure

2.9.12.3 Field Descriptions

Field	Description	Length	Data Type	DB Table	DB Attributes
Address 1	This is the first line of the providers address.	30	Char	T_PR_ADR	ADR_MAIL_STT_1
Address 2	This is the second line of the providers address.	30	Character	T_PR_ADR	ADR_MAIL_STT_2
Check Amount	This is the amount of the check.	13	Number	T_CHECK	AT_PAID
City State, Postal Code	This is the city, state and zip code of the provider.	20	Char	T_PR_ADR	ADR_MAIL_CITY
Date	This is the date the letter was generated.	10	Char	N/A	N/A
Original Payment Amount	This is the original check payment amount.	13	Number	T_CHECK	AT_PAID
Original Payment Date	This is the date the check was originally issued.	10	Char	T_CHECK	ISSUE_DATE
Original Payment Number	This is the original check number.	9	Char	T_CHECK	NUM_CHECK
Provider ID	This is the provider identification number.	10	Char	T_FIN_PROCESS_PROV_ID	PROV_PRIMARY_ID
Provider Name	This is the name of the provider.	50	Char	T_FIN_PROCESS_PROV_ID	NAME
Reissue Check #	This is the check number of the reissued check.	9	Number	T_CHECK	NUM_CHECK
Reissue Reason	This is the explanation for the reissue.	20	Char	T_CHECK_REISSUE	CDE_DESC

2.9.12.4 Associated Programs

Program	Description
No associated Programs found.	

2.9.12.5 Associated Requirements

ID
No associated Requirements found.

2.9.12.6 Change Orders

ID	Name	Description
None.		

2.9.13 FIN-9134-R -- Carrier Reissue Letter

This report is generated in the batch system.**T**he purpose of this letter is to inform the owner of the check that was requested to be reissued.**T**he text for the letter will come from a Microsoft(R) word template, and the unique information related to the record will be plugged into the variables listed below.

2.9.13.1 Technical Name

FIN-9134-R

2.9.13.2 Carrier Reissue Letter Layout

{Date}

{Carrier Name}
{Address 1}
{Address 2}
{City}, {ST} {Zip Code}-{Zip Code 4}

Carrier ID: {Carrier ID}

Subject: Reissue Check #{Reissued Check #}

Dear Carrier:

This letter is to notify you that we are sending you a replacement check in the amount of $ {Check Amount}.

Original Payment Number: {Original Payment Number}
Original Payment Amount: $ {Original Payment Amount}
Original Payment Date: {Original Payment Date}
Reissue reason: {Comments}

If you have any questions relating to the purpose for the original check, please contact EDS TPL Unit at (800)807-1459. For questions regarding the reissued check, contact the Financial Management Branch at (502)564-8217.

Sincerely,

Neville Wise, Director
Division of Administration and Financial Management

Enclosure

2.9.13.3 Field Descriptions

Field	Description	Length	Data Type	DB Table	DB Attributes
Address 1	This is the first line of the carriers address.	30	Char	T_TPL_CARRIER	ADR_MAIL_STT_1
Address 2	This is the second line of the carrier address.	30	Character	T_TPL_CARRIER	ADR_MAIL_STT_2
Carrier ID	This is the provider identification number.	10	Char	T_TPL_CARRIER	CARRIER_ID
Carrier Name	This is the name of the carrier.	50	Char	T_TPL_CARRIER	NAME
Check Amount	This is the amount of the check.	13	Number	T_CHECK	AT_PAID
City State, Postal Code	This is the city, state and zip code of the carrier.	20	Char	T_TPL_CARRIER	ADR_MAIL_CITY
Date	This is the date the letter was generated.	10	Char	N/A	N/A
Original Payment Amount	This is the original check payment amount.	13	Number	T_CHECK	AT_PAID
Original Payment Date	This is the date the check was originally issued.	10	Char	T_CHECK	ISSUE_DATE
Original Payment Number	This is the original check number.	9	Char	T_CHECK	NUM_CHECK
Reissue Check #	This is the check number of the reissued check.	9	Number	T_CHECK	NUM_CHECK
Reissue Reason	This is the explanation for the reissue.	20	Char	T_CHECK_REISSUE	CDE_DESC

2.9.13.4 Associated Programs

Program	Description
No associated Programs found.	

2.9.13.5 Associated Requirements

ID
No associated Requirements found.

2.9.13.6 Change Orders

ID	Name	Description
None.		

2.9.14 FIN-9135-R -- Non-Prov Reissue Letter

This report is generated in the batch system.**T**he purpose of this letter is to inform the owner of the check that was requested to be reissued.**T**he text for the letter will come from a Microsoft(R) word template, and the unique information related to the record will be plugged into the variables listed below.

2.9.14.1 Technical Name

FIN-9135-R

2.9.14.2 Non-Prov Reissue Letter Layout

{Date}

{Payee Name}
{Address 1}
{Address 2}
{City}, {ST} {Zip Code}-{Zip Code 4}

Payee ID: {Payee ID}

Subject: Reissue Check #{Reissued Check #}

Dear Payee:

This letter is to notify you that we are sending you a replacement check in the amount of ${Check Amount}.

Original Payment Number: {Original Payment Number}
Original Payment Amount: ${Original Payment Amount}
Original Payment Date: {Original Payment Date}
Reissue reason: {Reissue Reason}

For questions regarding the reissued check, please contact the Financial Management Branch at (502)564-8217.

Sincerely,

Neville Wise, Director
Division of Administration and Financial Management

Enclosure

2.9.14.3 Field Descriptions

Field	Description	Length	Data Type	DB Table	DB Attributes
Address 1	This is the first line of the payee address.	30	Char	T_FIN_NONPROV	ADR_MAIL_STT_1
Address 2	This is the second line of the payee address.	30	Character	T_FIN_NONPROV	ADR_MAIL_STT_2
Check Amount	This is the amount of the check.	13	Number	T_CHECK	AT_PAID
City State, Postal Code	This is the city, state and zip code of the payee.	20	Char	T_FIN_NONPROV	ADR_MAIL_CITY
Date	This is the date the letter was generated.	10	Char	N/A	N/A
Original Payment Amount	This is the original check payment amount.	13	Number	T_CHECK	AT_PAID
Original Payment Date	This is the date the check was originally issued.	10	Char	T_CHECK	ISSUE_DATE
Original Payment Number	This is the original check number.	9	Char	T_CHECK	NUM_CHECK
Payee ID	This is the payee identification number.	10	Char	T_FIN_NONPROV	SAK_PAYEE
Payee Name	This is the name of the payee.	50	Char	T_FIN_NONPROV	NAME
Reissue Check #	This is the check number of the reissued check.	9	Number	T_CHECK	NUM_CHECK
Reissue Reason	This is the explanation for the reissue.	20	Char	T_CHECK_REISSUE	CDE_DESC

2.9.14.4 Associated Programs

Program	Description
No associated Programs found.	

2.9.14.5 Associated Requirements

ID
No associated Requirements found.

2.9.14.6 Change Orders

ID	Name	Description
None.		

2.9.15 FIN-9136-R -- Provider Expenditure Notification letter

This report is generated in the batch system.**T**he purpose of this letter is to inform the owner of the expenditure that was issued.**T**he text for the letter will come from a Microsoft(R) word template, and the unique information related to the record will be plugged into the variables listed below.

2.9.15.1 Technical Name

FIN-9136-R

2.9.15.2 Provider Expenditure Notification Letter Layout

{Date}

{Provider Name}
{Address 1}
{Address 2}
{City}, {ST} {Zip Code}-{Zip Code 4}

Provider ID: {Provider ID}

Subject: Expenditure Payment #{Check #}

Dear Provider:

This letter is to notify you that we are sending you an expenditure payment in the amount of $ {Check Amount}.

Expenditure reason: {Expenditure Reason}

If you have any questions regarding the Remittance Advice, please contact EDS Provider Relations at (800)807-1232. For questions regarding the payment, contact the Financial Management Branch at (502)564-8217.

Sincerely,

Neville Wise, Director
Division of Administration and Financial Management

Enclosure

2.9.15.3 Field Descriptions

Field	Description	Length	Data Type	DB Table	DB Attributes
Address 1	This is the first line of the providers address.	30	Char	T_PR_ADR	ADR_MAIL_STT_1
Address 2	This is the second line of the providers address.	30	Character	T_PR_ADR	ADR_MAIL_STT_2
Check #	This is the check number of the check.	9	Number	T_CHECK	NUM_CHECK
Check Amount	This is the amount of the check.	13	Number	T_CHECK	AT_PAID
City State, Postal Code	This is the city, state and zip code of the provider.	20	Char	T_PR_ADR	ADR_MAIL_CITY
Date	This is the date the letter was generated.	10	Char	N/A	N/A
Expenditure Reason	This is the explanation for the payout.	20	Char	T_EXPENDITURE_RSN	CDE_DESC
Provider ID	This is the provider identification number.	10	Char	T_FIN_PROCESS_PROV_ID	PROV_PRIMARY_ID
Provider Name	This is the name of the provider.	50	Char	T_FIN_PROCESS_PROV_ID	NAME

2.9.15.4 Associated Programs

Program	Description
No associated Programs found.	

2.9.15.5 Associated Requirements

ID
No associated Requirements found.

2.9.15.6 Change Orders

ID	Name	Description
None.		

2.9.16 FIN-9137-R -- Carrier Expenditure Notification Letter

This report is generated in the batch system.**T**he purpose of this letter is to inform the owner of the expenditure that was issued.**T**he text for the letter will come from a Microsoft(R) word template, and the unique information related to the record will be plugged into the variables listed below.

2.9.16.1 Technical Name

FIN-9137-R

2.9.16.2 Carrier Expenditure Notification Letter Layout

{Date}

{Carrier Name}
{Address 1}
{Address 2}
{City}, {ST} {Zip Code}-{Zip Code 4}

Carrier ID: {Carrier ID}

Subject: Expenditure Payment #{Check #}

Dear Carrier:

This letter is to notify you that we are sending you an expenditure payment in the amount of $ {Check Amount}.

Expenditure reason: {Comments}
Member Name: {Member Name} Member #{Member Number}
Policyholder Name: {Policyholder Name} Policy #{Policy Number}

For questions regarding the payment, please contact the EDS TPL Unit at (800)807-1459.

Sincerely,

Third Party Liability Unit

Enclosure

2.9.16.3 Field Descriptions

Field	Description	Length	Data Type	DB Table	DB Attributes
Address 1	This is the first line of the carrier address.	30	Character	T_TPL_CARRIER	ADR_MAIL_STT_1
Address 2	This is the second line of the carrier address.	30	Character	T_TPL_CARRIER	ADR_MAIL_STT_2
Carrier ID	This is the carrier identification number.	10	Character	T_TPL_CARRIER	CARRIER_ID
Carrier Name	This is the name of the carrier.	50	Character	T_TPL_CARRIER	NAME
Check #	This is the check number of the check.	9	Number	T_CHECK	NUM_CHECK
Check Amount	This is the amount of the check.	13	Number	T_CHECK	AT_PAID
City State, Postal Code	This is the city, state and zip code of the carrier.	20	Character	T_TPL_CARRIER	ADR_MAIL_CITY
Comments	This is the explanation for the payout.	20	Character	T_EXPENDITURE_RSN	CDE_DESC
Date	This is the date the letter was generated.	10	Date (MM/DD/CCYY)	N/A	N/A
Member Name	This is the related member name.	20	Character	T_RECIP	NAME
Member Number	This is the identification of the member.	10	Character	T_RECIP	MEDICAID_ID
Policy Number	This is the identification of the policy holder.	10	Number	T_TPL_CARRIER	POLICY
Policyholder Name	This is the name of the related policy holder.	20	Character	T_TPL_CARRIER	POLICYHOLDER

2.9.16.4 Associated Programs

Program	Description
No associated Programs found.	

2.9.16.5 Associated Requirements

ID
No associated Requirements found.

2.9.16.6 Change Orders

ID	Name	Description
None.		

2.9.17 FIN-9138-R -- Non Prov Expenditure Notification Letter

This report is generated in the batch system.**T**he purpose of this letter is to inform the owner of the expenditure that was issued.**T**he text for the letter will come from a Microsoft(R) word template, and the unique information related to the record will be plugged into the variables listed below.

2.9.17.1 Technical Name

FIN-9138-R

2.9.17.2 Non-Prov Expenditure Notification Letter Layout

{Date}

{Payee Name}
{Address 1}
{Address 2}
{City}, {ST} {Zip Code}-{Zip Code 4}

Payee ID: {Payee ID}

Subject: Expenditure Payment #{Check #}

Dear Payee:

This letter is to notify you that we are sending you an expenditure payment in the amount of $ {Check Amount}.

Expenditure reason: {Expenditure Reason}

For questions regarding the payment, please contact the Financial Management Branch at (502)564-8217.

Sincerely,

Neville Wise, Director
Division of Administration and Financial Management

Enclosure

2.9.17.3 Field Descriptions

Field	Description	Length	Data Type	DB Table	DB Attributes
Address 1	This is the first line of the payee address.	30	Char	T_FIN_NONPROV	ADR_MAIL_STT_1
Address 2	This is the second line of the payee address.	30	Character	T_FIN_NONPROV	ADR_MAIL_STT_2
Check #	This is the check number of the check.	9	Number	T_CHECK	NUM_CHECK
Check Amount	This is the amount of the check.	13	Number	T_CHECK	AT_PAID
City State, Postal Code	This is the city, state and zip code of the payee.	20	Char	T_FIN_NONPROV	ADR_MAIL_CITY
Date	This is the date the letter was generated.	10	Char	N/A	N/A
Expenditure Reason	This is the explanation for the payout.	20	Char	T_EXPENDITURE_RSN	CDE_DESC
Payee ID	This is the provider identification number.	10	Char	T_FIN_NONPROV	SAK_PAYEE
Payee Name	This is the name of the payee.	50	Char	T_FIN_NONPROV	NAME

2.9.17.4 Associated Programs

Program	Description
No associated Programs found.	

2.9.17.5 Associated Requirements

ID
No associated Requirements found.

2.9.17.6 Change Orders

ID	Name	Description
None.		

2.9.18 FIN-9139-R -- Lien Holder Letter

This report is generated in the batch system.**T**he purpose of this letter is to inform the lien holder of the payment they are issued.**T**he text for the letter will come from a Microsoft(R) word template, and the unique information related to the record will be plugged into the variables listed below.

2.9.18.1 Technical Name

FIN-9139-R

2.9.18.2 Lien Holder Letter Layout

{Cycle Date}

{Lien Holder's Name} {Lien Holder Number}
{Address 1}
{Address 2}
{City}, {ST} {Zip Code}-{Zip Code 4}

Re: Levy/Lien Document #{Lien Document Number}

Dear Lien Holder:

This letter is to notify you that we have received and processed your notice of levy/lien against payments or money owed to tax identification, lien order or court order number {Lien Document Number}. Enclosed is check #{Check #} in the amount of $ {Lien Payment Amount} which accounts for all payments or money owed to this provider for the current week.

In addition, we have set up a levy/lien against this provider's payments in our system in the amount of $ {Original Lien Setup Amount}. We will continue to assess this levy/lien order against this provider's payments until further notification is received, the levy/lien has expired or until the original levy/lien amount has been satisfied. Any increases or decreases to the original levy/lien amount should be sent to the following address:

Department for Medicaid Services
Financial Management Branch
275 East Main Street 6W-C
Frankfort, KY 40621

Sincerely,

Neville Wise, Director
Division of Administration and Financial Management

Enclosure

2.9.18.3 Field Descriptions

Field	Description	Length	Data Type	DB Table	DB Attributes
Address 1	This is the first line of the payee address.	30	Char	T_FIN_NONPROV	ADR_MAIL_STT_1
Address 2	This is the second line of the payee address.	30	Character	T_FIN_NONPROV	ADR_MAIL_STT_2
Check #	This is the check number of the check.	9	Number	T_CHECK	NUM_CHECK
City State, Postal Code	This is the city, state and zip code of the payee.	20	Char	T_FIN_NONPROV	ADR_MAIL_CITY
Cycle Date	This is the date the letter was generated.	10	Char	N/A	N/A
Lien Document Number	This is the identification of the supporting documentation for the lien.	13	Number	T_LIEN	COR_DOC
Lien Holder Name	This is the name of the payee.	50	Char	T_FIN_NONPROV	NAME
Lien Holder Number	This is the provider identification number.	10	Char	T_FIN_NONPROV	SAK_PAYEE
Lien Payment Amount	This is the amount of the check.	13	Number	T_CHECK	AT_PAID
Original Lien Setup Amount	This is the setup amount of the lien	13	Number	T_LIEN	AT_SETUP

2.9.18.4 Associated Programs

Program	Description
No associated Programs found.	

2.9.18.5 Associated Requirements

ID
No associated Requirements found.

2.9.18.6 Change Orders

ID	Name	Description
None.		

2.9.19 FIN-9141-R -- Member Expenditure Notification letter

This letter is generated in the batch system.**T**he purpose of this letter is to inform the member of the expenditure that was issued.**T**he text for the letter will come from a Microsoft(R) word template, and the unique information related to the record will be plugged into the variables listed below.

2.9.19.1 Technical Name

FIN-9141-R

2.9.19.2 Member Expenditure Notification Letter Layout

{Date}

{Member Name}
{Address 1}
{Address 2}
{City}, {ST} {Zip Code}-{Zip Code 4}

Member ID: {Member ID}

Subject: Expenditure Payment #{Check #}

Dear Member:

This letter is to notify you that we are sending you an expenditure payment in the amount of $ {Check Amount}.

Expenditure reason: {Expenditure Reason}

If you have any questions regarding the Remittance Advice, please contact EDS Provider Relations at (800)807-1232. For questions regarding the payment, contact the Financial Management Branch at (502)564-8217.

Sincerely,

Neville Wise, Director
Division of Administration and Financial Management

Enclosure

2.9.19.3 Field Descriptions

Field	Description	Length	Data Type	DB Table	DB Attributes
Address	This is the address of the member receiving the letter.	20	Character	T_RE_BASE	ADR_STRET_1
Address2	This is the address of the member receiving the letter.	20	Character	T_RE_BASE	ADR_STRET_2
Amount	The amount the expenditure was paid.	12	Number	T_EXPENDITURE	TOTAL_PAID_AMT
City	This is the city of the member receiving the letter.	20	Character	T_RE_BASE	ADR_CITY
Expenditure Payment	The payment number associated with the expenditure.	9	Number	T_CHECK	NUM_CHECK
Expenditure Reason	The reason code tied to the expenditure.	4	Character	T_EXPENDITURE	CDE_REASON_FOUR
Member ID	The identification number of the member receiving the letter.	10	Character	T_RE_BASE	MEDICAID_ID
State	This is the state of the member receiving the letter.	2	Character	T_RE_BASE	ADR_STATE
Zip Code	This is the zip code of the member receiving the letter.	5	Number	T_RE_BASE	ADR_ZIP_CODE
Zip Code 4	This is the zip code plus four of the member receiving the letter.	4	Number	T_RE_BASE	ADR_ZIP_CODE_4

2.9.19.4 Associated Programs

Program	Description
No associated Programs found.	

2.9.19.5 Associated Requirements

ID
No associated Requirements found.

2.9.19.6 Change Orders

ID	Name	Description
None.		

2.10 Internal and External Interfaces

This folder contains a link to the file layouts of the external files in the subsystem.

2.10.1 Entities

eMARS	Kentucky Statewide Accounting System
DMS	Kenucky Department of Medicaid Services
Provider	Kentucky Provider Population
Other	Kentucky Other Contractors

2.10.2 Input Files

Interface ID	File Description	Entity	Frequency
614, 688	A/ R Contractor Feed	Other	On Request

2.10.3 Output Files

Interface ID	File Description	Entity	Frequency
578	On Demand Checks	eMARS	Daily
350	Paper Check Payment	eMARS	Weekly
580	Non Provider Check Payment	eMARS	Weekly
354	KenPAC Financial Check Payment	eMARS	Monthly
355	Lockin Financial Check Payment	eMARS	Monthly
356	Weekly EFT Payment	eMARS	Weekly
579	KenPAC EFT Payment	eMARS	Monthly
357	Lockin EFT Payment	eMARS	Monthly
353	Provider Refunds	eMARS	Weekly
359	Provider 1099	eMARS	Annually
667	835 Transactions	Provider	Weekly
723	277 Transactions	Provider	Weekly
469	Transfers – Final Payment Processing	DMHMR	Weekly
467	Denials – Final Payment Processing	DMHMR	Weekly
468	Refunds – Final Payment Processing	DMHMR	Weekly
352	Impact Plus Total Payments (DMHMR)	DMHMR	Weekly
351	Impact Plus Total Payments (DCBS)	DMHMR	Weekly

459	TPL Contractor Recoupment Extract (Code MS)	DMS	Monthly
460	TPL Contractor Recoupment Extract (non-lockbox)	DMS	Monthly
615	Private Transportation Remit	Transportation	Weekly

2.10.4 Input-Output Files

None.

2.10.5 File Layouts

Contractor AR Record Layout

Contractor Recoupment Extract (code MS) Record Layout

Contractor Recoupment Extract (non-lockbox) Record Layout

EFT Record Layout

emar 1099 Record Layout

emar payment Record Layout

eMAR Refund Record Layout

HIPAA 277 Record Layout

HIPAA 835 Record Layout

Impact Plus DCBS payment Record Layout

Impact Plus Deny Record Layout

Impact Plus DMH payment Record Layout

Impact Plus Refunds Record Layout

Impact Plus Transfers Record Layout

KY_eMARS_1099

KY_eMARS_Checkwriter

KY_eMARS_GAX

Payment Record Layout

prov 1099 refund Record Layout

prov 1099 vendor addr Record Layout

Provider Reimbursement

Transportation RA Layout

2.10.6 Contractor AR Record Layout

Description	Field Length	Type	Notes
Rec ID	1	Char	
Prov Number	8	Numeric	
Prov Location	2	Numeric	
Summary Record			
Amt to Recover	9	Numeric	9999999.99
Date Letter Sent	8	Numeric	CCYYMMDD
Filler	16	Char	
Detail Record redefines Summary Record			
Detail SEQ	5	Numeric	
ICN	17	Char	
Detail Number	2	Char	
Amt Requested	9	Numeric	9999999.99

2.10.7 Contractor Recoupment Extract (code MS) Record Layout

Description	Field Length	Type	Notes
PROVIDER_NUM	10	Char	
PROVIDER_NAME	35	Char	
TT_TO_RECOVER	11	Char	99999999.99
TT_TO_RECOVER_SIGN	1	Char	
TT_RECOVER_CHCK	11	Char	99999999.99
TT_RECOVER_CHCK_SIGN	1	Char	
TT_RECOVER_RECOUP	11	Char	99999999.99
TT_RECOVER_RECOUP_SIGN	1	Char	
TT_RECOVER_MONTH	11	Char	99999999.99
TT_RECOVER_MONTH_SIGN	1	Char	
TT_REMAIN_RECOVER	11	Char	99999999.99
TT_REMAIN_RECOVER_SIGN	1	Char	

2.10.8 Contractor Recoupment Extract (non-lockbox) Record Layout

Description	Field Length	Type	Notes
PROVIDER_NUM	10	Char	
PROVIDER_NAME	35	Char	
DATE_RECVD	10	Char	99/99/9999
CHECK_AMOUNT	11	Char	99999999.99
CHECK_AMOUT_SIGN	1	Char	
CCN	11	Char	

2.10.9 EFT Record Layout

2.10.9.1 Record Type 10 MARS Header Record

interChange Field Description	interChange Field Length	interChange Type	interChange Notes
rec_type	2	Char	10 = Header 21 = Accounting Record 30 = Payment Record
CW_DEPT_CD	4	Char	
CW_FILE_ID	20	Char	
CW_UNIT_CD	4	Char	
BANK_ACCT_CD	4	Char	
PYMT_DT	10	Char	
PYMT_DSCR	60	Char	
CNTAC_CD	19	Char	
BFY	4	Char	
FY	4	Char	
PER	2	Char	
EFT_FRMT	4	Char	
CHK_FRMT	4	Char	
DISB_CAT	4	Char	
TOT_PYMT_AM	15	Char	
NO_ACTG_LN	3	Char	
NO_PYMT_LN	6	Char	
PERMIT_NO	10	Char	

LN_NO	5	Char	
EVNT_TYP	4	Char	
ACTG_TMPL_ID	6	Char	
FUND_CD	4	Char	
SFUND_CD	4	Char	
DEPT_CD	4	Char	
UNIT_CD	4	Char	
SUNIT_CD	4	Char	
APPR_CD	9	Char	
OBJ_CD	4	Char	
SOBJ_CD	4	Char	
RSRC_CD	4	Char	
SRSRC_CD	4	Char	
DOBJ_CD	4	Char	
DRSRC_CD	4	Char	
ACTV_CD	4	Char	
SACTV_CD	4	Char	
FUNC_CD	10	Char	
SFUNC_CD	4	Char	
BSA_CD	4	Char	
SBSA_CD	4	Char	
RPT_CD	10	Char	
SRPT_CD	4	Char	

LOC_CD	4	Char	
SLCO_CD	4	Char	
TASK_CD	4	Char	
STASK_CD	4	Char	
TASK_ORD_CD	6	Char	
PROG_CD	10	Char	
PHASE_CD	6	Char	
PPC_CD	6	Char	
LN_AM	15	Char	
LN_NO	5	Char	
VEND_CUST_CD	20	Char	
TIN	9	Char	
TIN_TYP	1	Char	
AD_ID	20	Char	
CNTAC_ID	20	Char	
LGL_NM	60	Char	
ALIAS_NM	60	Char	
AD_LN_1	75	Char	
AD_LN_2	75	Char	
CITY	60	Char	
ST	2	Char	
ZIP	10	Char	
CTRY	3	Char	

DLVR_PT	10	Char	
PYMT_AM	15	Char	
CMNT	60	Char	
PYMT_CD	2	Char	
CHK_EFT_NO	15	Char	
ACH_TRN_CD	2	Char	
ACH_RECV_ID	9	Char	
ACH_ACCT_NO	17	Char	
ACH_RECV_NM	16	Char	
DSCRE_DATA	2	Char	
TOT_ADNM_LN	4	Char	
PYMT_REMT_ADV	1500	char	

2.10.9.2 Record Type 21 Provider Record

Description	Field Length	Type	Notes
Rec Type	2	Char	
Budget FSY	2	Char	
Pay Agency	3	Char	
Code Group	4	Char	
Seq Num	2	Char	
Line Amount	14	Char	999999999999.99
Filler	238	Char	Spaces

2.10.9.3 Record Type 30 Check Issue Record

Description	Field Length	Type	Notes
Rec Type	2	Char	
Pay Seq Num	7	Char	
Prov Name	30	Char	

FEIN	11	Char	
Vendor Ind	1	Char	
Vendor TIN	9	Char	
ADDR1	30	Char	
ADDR2	30	Char	
ADDR3	30	Char	
City	18	Char	
State	2	Char	
Zip-Code	9	Char	
Country	30	Char	
Delivery	2	Char	
Check Amount	10	Char	99999999.99
Comment	30	Char	
Check Code	2	Char	
Filler	11	Char	spaces

2.10.9.4 Record Type 32 EFT Record

Description	Field Length	Type	Notes
Rec Type	2	Char	
Pay Seq Num	7	Char	
Prov Name	30	Char	
FEIN	11	Char	
Rec Code	1	Char	
Tran code	2	Char	
RDFI ID	8	Char	
RDFI CKDG	1	Char	
RDFI Acct Num	17	Char	
EFT Amount	10	Char	99999999.99
Provider ACH Id	2	Char	
Provider ACH Prov Num	10	Char	

Filler	3	Char	‘000’
Indiv Name	22	Char	
DiscData	2	Char	
Addenda Id	1	Char	
Bank Id	8	Char	
Trace Seq	7	Char	
Filler	56	Char	spaces
Filler	65	Char	spaces

2.10.10 emar 1099 Record Layout

Description	Field Length	Type	Notes
TIN	9	Char	
TIN_TYP	1	Char	
TIN_NM_1	40	Char	
TIN_NM_2	40	Char	
TIN_AD	40	Char	
TIN-CITY-NM	30	Char	
TIN-ST	2	Char	
TIN-ZIP	10	Char	
CTRY-CD	10	Char	
RPT-1099-FL	5	Char	

2.10.11 emar payment Record Layout

2.10.11.1 Header Record

Description	Field Length	Type	Notes
rec_type	2	Char	10
CW_DET_CD	4	Char	
CW_FILE_ID	20	Char	
CW_UNT_CD	4	Char	
BANK_ACT_CD	4	Char	
PYT_DT	10	Char	

PYT_DSCR	60	Char	
CNTAC_CD	19	Char	
BFY	4	Char	
FY	4	Char	
PER	2	Char	
ET_FRMT	4	Char	
CHK_FRMT	4	Char	
DISB_CAT	4	Char	
TT_PYT_AM	15	Char	
NO_ACTG_LN	3	Char	
NO_PYT_LN	6	Char	
PERMT_NO	10	Char	
filler	1896	Char	

2.10.11.2 Accounting Record

Description	Field Length	Type	Notes
rec_type	2	Char	21
LN_NO	5	Char	
EVT_TYP	4	Char	
ACTG_TMPL_ID	6	Char	
FUND_CD	4	Char	
SFUND_CD	4	Char	
DET_CD	4	Char	
UNT_CD	4	Char	
SUNT_CD	4	Char	
APPR_CD	9	Char	
OBJ_CD	4	Char	
SOBJ_CD	4	Char	
RSRC_CD	4	Char	
SRSRC_CD	4	Char	

DOBJ_CD	4	Char	
DRSRC_CD	4	Char	
ACTV_CD	4	Char	
SACTV_CD	4	Char	
FUNC_CD	10	Char	
SFUNC_CD	4	Char	
BSA_CD	4	Char	
SBSA_CD	4	Char	
RT_CD	10	Char	
SRT_CD	4	Char	
LOC_CD	4	Char	
SLOC_CD	4	Char	
TASK_CD	4	Char	
STASK_CD	4	Char	
TASK_ORD_CD	6	Char	
PROG_CD	10	Char	
PHASE_CD	6	Char	
PPC_CD	6	Char	
LN_AM	15	Char	
Filler	1902	Char	

2.10.11.3 Payment Record

Description	Field Length	Type	Notes
rec_type	2	Char	30
LN_NO	5	Char	
VEND_CUT_CD	20	Char	
TIN	9	Char	
TIN_TYP	1	Char	
AD_ID	20	Char	
CNTAC_ID	20	Char	

LGL-NM	60	Char	
ALIAS_NM	60	Char	
AD_LN_1	75	Char	
AD_LN_2	75	Char	
CITY	60	Char	
ST	2	Char	
ZIP	10	Char	
CTRY	3	Char	
DLVR_PT	10	Char	
PYT_AM	15	Char	
CMNT	60	Char	
PYT_CD	2	Char	
CHK_ET_NO	15	Char	
ACH_TRAN_CD	2	Char	
ACH_RECV_ID	9	Char	
ACH_ACT_NO	17	Char	
ACH_RECV_NM	16	Char	
DSCRE_DATA	2	Char	
TT_ADNM_LN	4	Char	
PYT_RET_ADV	1500	Char	
Filler	1	Char	

2.10.12 eMAR Refund Record Layout

2.10.12.1 (AMS Document)

Description	Field Length	Type	Notes
REC_CD	1	Char	HEADER = ‘1’
DOC_CAT	8	Char	“ABS”
DOC_TYP	8	Char	“ABS”
DOC_CD	8	Char	“JV2E”
DOC_DET_CD	4	Char	“630”

DOC_UNT_CD	4	Char	“UNIT”
DOC_ID1	1	Char	“1”
DOC_ID_FL_NUM	5	Char	“00353”
DOC_ID_SYS_MNEM	3	Char	“216”
DOC_ID_JUL_DTE	5	Char	CURRENT DATE
DOC_ID_SEQ	5	Char	SEQ NUMBER
DOC_ID_FILLER	1	Char	SPACE
DOC_VERS_NUM	2	Char	“01”
AUTO_DOC_NUM	5	Char	“FALSE”
DOC_IMP_MODE	2	Char	“OE” (ORIGINAL ENTRY)
DOC_FILLER	237	Char	SPACES

2.10.12.2 ABS Document Header

Description	Field Length	Type	Notes
REC_CD	1	Char	HEADER = ‘2’
DOC_CAT	8	Char	“ABS”
DOC_TYP	8	Char	“ABS”
DOC_CD	8	Char	“JV2E”
DOC_DET_CD	4	Char	“630”
DOC_UNT_CD	4	Char	“UNIT”
DOC_ID1	1	Char	“1”
DOC_ID_FL_NUM	5	Char	“00353”
DOC_ID_SYS_MNEM	3	Char	“216”
DOC_ID_JUL_DTE	5	Char	CURRENT DATE
DOC_ID_SEQ	5	Char	SEQ NUMBER
DOC_ID_FILLER	1	Char	SPACE
DOC_VERS_NUM	2	Char	“01”
HDR_REC_DATE	10	Char	SPACES
HDR_BFY	4	Char	SPACES

HDR_FYDC	4	Char	SPACES
HDR_PER_DC	2	Char	SPACES
HDR_NM	60	Char	“MEDICAID REFUND”
HDR_DSCR	60	Char	“MEDICAID REFUND”
CITED_AUTH	20	Char	“MEDICAID REFUND”
HDR_FIL	85	Char	SPACES

2.10.12.3 (ABS Document Vend)

Description	Field Length	Type	Notes
REC_CD	1	Char	HEADER = ‘3’
DOC_CAT	8	Char	“ABS”
DOC_TYP	8	Char	“ABS”
DOC_CD	8	Char	“JV2E”
DOC_DET_CD	4	Char	“630”
DOC_UNT_CD	4	Char	“UNIT”
DOC_ID1	1	Char	“1”
DOC_ID_FL_NUM	5	Char	“00353”
DOC_ID_SYS_MNEM	3	Char	“216”
DOC_ID_JUL_DTE	5	Char	CURRENT DATE
DOC_ID_SEQ	5	Char	SEQ NUMBER
DOC_ID_FILLER	1	Char	SPACE
DOC_VERS_NUM	2	Char	“01”
VEND_LINE_NO	5	Char	‘00001’ FOR DEBIT ‘00002’ FOR CREDIT
VEND_CUT_CD	20	Char	SPACES FOR DEBIT “ZZMISCCORP” FOR CREDIT
VEND_LGL_NM	60	Char	T_IRS_W9_INFO.N

			AME
VEND_ADR1	75	Char	T_IRS_W9_INFO.ADR_MAIL_STRT1
VEND_CITY	60	Char	T_IRS_W9_INFO.ADR_MAIL_CITY
VEND_STATE	2	Char	T_IRS_W9_INFO.ADR_MAIL_STATE
VEND_ZIP	5	Char	T_IRS_W9_INFO.ADR_MAIL_ZIP
VEND_ZIP4	4	Char	T_IRS_W9_INFO.ADR_MAIL_ZIP_4
VEND_TIN	9	Char	T_PR_TAX_ID.NUM_TAX_ID
VEND_TIN_TYP	1	Char	T_PR_TAX_ID.NUM_TAX_ID_TYPE
VEND_FIL	3	Char	SPACES

2.10.12.4 (ABS Document Accounting)

Description	Field Length	Type	Notes
REC_CD	1	Char	HEADER = ‘4’
DOC_CAT	8	Char	“ABS”
DOC_TYP	8	Char	“ABS”
DOC_CD	8	Char	“JV2E”
DOC_DET_CD	4	Char	“630”
DOC_UNT_CD	4	Char	“UNIT”
DOC_ID1	1	Char	“1”
DOC_ID_FL_NUM	5	Char	“00353”
DOC_ID_SYS_MNEM	3	Char	“216”
DOC_ID_JUL_DTE	5	Char	CURRENT DATE
DOC_ID_SEQ	5	Char	SEQ NUMBER
DOC_ID_FILLER	1	Char	SPACE
DOC_VERS_NUM	2	Char	“01”
ACTG_LINE_NO	5	Char	CARRY FORWARD FROM VEND LINE

			NO
ACTG_VEND_LINE_NO	5	Char	Seq num
ACTG_TMPL_ID	6	Char	“MEDR01”
ACTG_EVT_TYPE_ID	4	Char	“GA01”
ACTG_LN_AT_SIGN	1	Char	+/-
ACTG_LN_AMT	15	Char	2 decimals implied
ACTG_FUND_CD	4	Char	SPACES
ACTG_SFUND_CD	4	Char	SPACES
ACTG_OBJ_CD	4	Char	SPACES
ACTG_SOBJ_CD	4	Char	SPACES
ACTG_RSRC_CD	4	Char	SPACES
ACTG_DET_CD	4	Char	SPACES
ACTG_UNT_CD	4	Char	SPACES
ACTG_SUNT_CD	4	Char	SPACES
ACTG_APPR_CD	9	Char	SPACES
ACTG_BSA_CD	4	Char	SPACES
ACTG_SBSA_CD	4	Char	SPACES
ACTG_DOBJ_CD	4	Char	SPACES
ACTG_DRSC_CD	4	Char	SPACES
ACTG_LOC_CD	4	Char	SPACES
ACTG_SLOC_CD	4	Char	SPACES
ACTG_ACTV_CD	4	Char	SPACES
ACTG_SACTV_CD	4	Char	SPACES
ACTG_FUNC_CD	10	Char	SPACES
ACTG_SFUNC_CD	4	Char	SPACES
ACTG_RT_CD	10	Char	SPACES
ACTG_SRT_CD	4	Char	SPACES
ACTG_TASK_CD	4	Char	SPACES
ACTG_STASK_CD	4	Char	SPACES

ACTG_TASK_ORD_CD	6	Char	SPACES
ACTG_PROG_CD	10	Char	SPACES
ACTG_PHASE_CD	6	Char	SPACES
ACTG_PPC_CD	6	Char	SPACES
ACTG_LN_DESCR	29	CHAR	"PROVIDER REFUND – UPDATE 1099"
ACTG_FIL	40	Char	SPACES

2.10.13 HIPAA 277 Record Layout

2.10.13.1 Level 1 Record

Description	Field Length	Type	Notes
Record Type	4	Char	
BHT03 Ref id	30	Char	
HL01 Hier id	12	Char	
HL02 parent id	12	Char	
HL03 level code	2	Char	
HL04 child code	1	Char	
NM103 org name	35	Char	
NM108 qual code	2	Char	
NM109 sender id	20	Char	
N301 sender adr1	55	Char	
N302 sender adr2	55	Char	
N401 sender city	30	Char	
N402 sender state	2	Char	
N403 sender zip	15	Char	
file type	2	Char	
rec sep	1	Char	

2.10.13.2 Level 2 Record

Description	Field Length	Type	Notes
record type	4	Char	

HL01 hier id	12	Char	
HL02 parent id	12	Char	
HL03 level code	2	Char	
HL04 child code	1	Char	
NM108 qual code	2	Char	
NM109 receiver id	20	Char	
rec sep	1	Char	

2.10.13.3 Level 3 Record

Description	Field Length	Type	Notes
record type	4	Char	
HL01 hier id	12	Char	
HL02 parent id	12	Char	
HL03 level code	2	Char	
HL04 child code	1	Char	
NM102 qual type	1	Char	
NM103 nam last org	35	Char	
NM104 nam first	25	Char	
NM105 nam mid	25	Char	
NM108 qual code	2	Char	
NM109 provider id	15	Char	
rec sep	1	Char	

2.10.13.4 Level 4 Record

Description	Field Length	Type	Notes
record type	4	Char	
HL01 hier id	12	Char	
HL02 parent id	12	Char	
HL03 level code	2	Char	
HL04 child code	1	Char	
NM101 id code	2	Char	

NM102 qual type	1	Char	
NM103 nam last org	35	Char	
NM104 nam first	25	Char	
NM105 nam mid	25	Char	
NM108 qual code	2	Char	
NM109 medicaid id	20	Char	
rec sep	1	Char	

2.10.13.5 Header Record

Description	Field Length	Type	Notes
record type	4	Char	
TRN02 pat acct	30	Char	
TRN04 ref id	2	Char	
STC01 1 status cat	5	Char	
STC01 2 clm status	5	Char	
STC01 3 status ent	2	Char	
STC02 dte status	6	Char	
STC03 action code	2	Char	
STC04 billed amt	15	Char	
STC10 1 status cat	5	Char	
STC10 2 clm status	5	Char	
STC10 3 status ent	2	Char	
STC11 1 status cat	5	Char	
STC11 2 clm status	5	Char	
STC11 3 status ent	2	Char	
REF02 icn	13	Char	
REF02 type of bill	3	Char	
REF02 med rec num	30	Char	
DTP02 svc dates	17	Char	
rec sep	1	Char	

2.10.13.6 Detail Record

Description	Field Length	Type	Notes
record type	4	Char	
SVC01 1 qualifier	2	Char	
SVC01 2 service	11	Char	
SVC01 3 mod1	2	Char	
SVC01 4 mod2	2	Char	
SVC01 5 mod3	2	Char	
SVC01 6 mod4	2	Char	
SVC02 billed amt	15	Char	
SVC04 rev code	5	Char	
SVC07 units billed	15	Char	
STC01 1 status cat	5	Char	
STC01 2 clm status	5	Char	
STC01 3 status ent	2	Char	
STC03 action code	2	Char	
STC04 billed amt	15	Char	
STC10 1 status cat	5	Char	
STC10 2 clm status	5	Char	
STC10 3 status ent	2	Char	
STC11 1 status cat	5	Char	
STC11 2 clm status	5	Char	
STC11 3 status ent	2	Char	
REF02 line item ctl	30	Char	
DTP02 svc dates	17	Char	
rec sep	1	Char	

2.10.14 HIPAA 835 Record Layout

2.10.14.1 Hdr PMT Record

Description	Field Length	Type	Notes

record type	4	Char	
cntl set num	9	Char	
txn handling code	1	Char	
cycle date	8	Char	
payment date	8	Char	
payment amt	14	Char	
payment method	3	Char	
payment format code	3	Char	
payment number	9	Char	
payment receiver id	36	Char	
record separator	1	Char	

2.10.14.2 Hdr Payer Grp Record

Description	Field Length	Type	Notes
record type	4	Char	
payer name	60	Char	
payer addr1	55	Char	
payer addr2	55	Char	
payer city	30	Char	
payer state	2	Char	
payer zip	16	Char	
payer contact name	60	Char	
payer contact phone1	80	Char	
payer contact phone2	80	Char	
payer aba qualifier	2	Char	
payer aba number	12	Char	
payer acct qualifier	2	Char	
payer acct number	35	Char	
payer tax id	10	Char	
payer natl plan num	80	Char	

record separator	1	Char	

2.10.14.3 Hdr Payee Grp Record

Description	Field Length	Type	Notes
record type	4	Char	
payee provider id type	2	Char	
payee provider id	15	Char	
payee name	60	Char	
payee receiver id	35	Char	
payee tax id	10	Char	
payee aba qualifier	2	Char	
payee aba number	10	Char	
payee acct qualifier	2	Char	
payee acct number	18	Char	
record separator	1	Char	

2.10.14.4 Claim Loop Record

Description	Field Length	Type	Notes
record type	4	Char	
claim loop number	5	Char	
record separator	1	Char	

2.10.14.5 Claim Header Record

Description	Field Length	Type	Notes
record type	4	Char	
claim type	1	Char	
pat acct num	38	Char	
claim status	2	Char	
billed amount	14	Char	
paid amount	14	Char	
pat liab amount	14	Char	
control number	13	Char	

place of service	2	Char	
type of bill	1	Char	
sub pat first name	14	Char	
sub pat middle name	1	Char	
sub pat last name	16	Char	
sub pat medicaid id	12	Char	
cor pat first name	14	Char	
cor pat middle name	1	Char	
cor pat last name	16	Char	
cor pat medicaid id	12	Char	
rend prov name type	1	Char	
rend prov last name	16	Char	
rend prov middle name	1	Char	
rend prov first name	14	Char	
rend prov id type	2	Char	
rend prov id	15	Char	
med record number	12	Char	
soc sec number	9	Char	
first date of service	8	Char	
last date of service	8	Char	
drg code	4	Char	
drg weight	8	Char	
Adjustment ICN	13	Char	
Duplicate ICN	13	Char	
Orig Medicaid allowed	14	Char	
Inpat Cov days	12	Char	
Inpat DRG amount	14	Char	
Inpat remark cde 1	5	Char	
Inpat remark cde 2	5	Char	

Outpat remark cde 1	5	Char	
Outpat remark cde 2	5	Char	
record separator	1	Char	

2.10.14.6 Claim Detail Record

Description	Field Length	Type	Notes
record type	4	Char	
procedure type	2	Char	
procedure code	12	Char	
procedure mod1	2	Char	
procedure mod2	2	Char	
procedure mod3	2	Char	
procedure mod4	2	Char	
revenue code	4	Char	
billed amt	14	Char	
paid amt	14	Char	
allowed amt	14	Char	
allowed qty	12	Char	
billed qty	12	Char	
sub procedure type	2	Char	
sub procedure code	12	Char	
sub procedure mod1	2	Char	
sub procedure mod2	2	Char	
sub procedure mod3	2	Char	
sub procedure mod4	2	Char	
first date of service	8	Char	
last date of service	8	Char	
prov control num	30	Char	
rendering prov id type	3	Char	
rendering prov id	15	Char	

record separator	1	Char	

2.10.14.7 Claim Adjust Record

Description	Field Length	Type	Notes
record type	4	Char	
adjust group code	2	Char	
adjust rsn code 1	5	Char	
adjust amount 1	14	Char	
adjust quantity 2	12	Char	
adjust rsn code 2	5	Char	
adjust amount 2	14	Char	
adjust quantity 2	12	Char	
adjust rsn code 3	5	Char	
adjust amount 3	14	Char	
adjust quantity 3	12	Char	
adjust rsn code 4	5	Char	
adjust amount 4	14	Char	
adjust quantity 4	12	Char	
adjust rsn code 5	5	Char	
adjust amount 5	14	Char	
adjust quantity 5	12	Char	
adjust rsn code 6	5	Char	
adjust amount 6	14	Char	
adjust quantity 6	12	Char	
record separator	1	Char	

2.10.14.8 Rend Prov Record

Description	Field Length	Type	Notes
record type	4	Char	
alt id type	2	Char	
alt id	31	Char	
record separator	1	Char	

2.10.14.9 TPL Data Record

Description	Field Length	Type	Notes
record type	4	Char	
carrier id	7	Char	
carrier name	35	Char	
record separator	1	Char	

2.10.14.10 Remark Codes Record

Description	Field Length	Type	Notes
record type	4	Char	
qualifier code	2	Char	
remark code	5	Char	
record separator	1	Char	

2.10.14.11 Financial TXN Record

Description	Field Length	Type	Notes
record type	4	Char	
provider id	15	Char	
fiscal date	8	Char	
reason code	2	Char	
cash control num	13	Char	
fin txn amount	14	Char	
record separator	1	Char	

2.10.15 Impact Plus DCBS Payment Record Layout

Description	Field Length	Type	Notes
TAX_ID	11	Char	
TAX_ID_TYPE	1	Char	
LEGAL_NAME	60	Char	
AMOUT_PAID	10	Char	
RA_NUMBER	6	Char	
ADDRESS_1	75	Char	

ADDRESS_2	75	Char	
CITY	60	Char	
STATE	2	Char	
ZIP	10	Char	
COUNTY	3	Char	
FILLER	47	Char	

2.10.16 Impact Plus Deny Record Layout

Description	Field Length	Type	Notes
ICN	17	Char	
PROV_NUM	10	Char	
TAX_NUM	12	Char	
MAID_NUM	10	Char	
PROC_CODE	5	Char	
MODIFIER	5	Char	
UNITS	5	Number	
FDOS	8	Number	
LDOS	8	Number	
BILLED_AMT	9	Number	2 decimal point
PT_SIGN	1	Char	
EOB_CODE	4	Char	Increased from 3 to 4
EOB_DESC	95	Char	

2.10.17 Impact Plus DMH Payment Record Layout

Description	Field Length	Type	Notes
TAX_ID	11	Char	
TAX_ID_TYPE	1	Char	
LEGAL_NAME	60	Char	
AMOUT_PAID	10	Char	
RA_NUMBER	9	Char	Changed from 6 to 9

ADDRESS_1	75	Char	
ADDRESS_2	75	Char	
CITY	60	Char	
STATE	2	Char	
ZIP	10	Char	
COUNTY	3	Char	
FILLER	47	Char	

2.10.18 Impact Plus Refuns Record Layout

Description	Field Length	Type	Notes
ICN_A	17	Char	
PROV_NUM_A	10	Char	
TAX_NUM_A	12	Char	
MAID_NUM_A	10	Char	
PROC_CODE_A	5	Char	
MODIFIER_A	5	Char	
UNITS_A	5	Number	
FDOS_A	8	Number	
LDOS_A	8	Number	
PAID_AT_A	9	Number	2 decimal point
PT_SIGN_A	1	Char	
PAID_T_A	8	Number	
RA_A	9	Number	Increased from 6 to 9
ORIG_ICN	17	Char	
ICN_ORIG_AMT	9	Number	2 decimal point
ICN_ORIG_SIGN	1	Char	
ICN_ADJ_AMT	9	Number	2 decimal point
ICN_ADJ_SIGN	1	Char	

2.10.19 Impact Plus Transfers Record Layout

Description	Field Length	Type	Notes
ICN	17	Char	
PROV_NUM	10	Char	
TAX_NUM	12	Char	
MAID_NUM	10	Char	
PROC_CODE	5	Char	
MODIFIER	5	Char	
UNITS	5	Number	
FDOS	8	Number	
LDOS	8	Number	
PAID_AMT	9	Number	2 decimal point
PT_SIGN	1	Char	
PAID_DT	8	Number	
RA	9	Number	Increased from 6 to 9

2.10.20 eMARS Payment Record Layout

Record format: Fixed Block

Record Size:

2.10.20.1 Header Record

Description	Field Length	Type	Notes
rec_type	2	Char	10
CW_DEPT_CD	4	Char	
CW_FILE_ID	20	Char	
CW_UNIT_CD	4	Char	
BANK_ACCT_CD	4	Char	
PYMT_DT	10	Char	
PYMT_DSCR	60	Char	
CNTAC_CD	19	Char	
BFY	4	Char	

FY	4	Char	
PER	2	Char	
EFT_FRMT	4	Char	
CHK_FRMT	4	Char	
DISB_CAT	4	Char	
TOT_PYMT_AM	15	Char	
NO_ACTG_LN	3	Char	
NO_PYMT_LN	6	Char	
PERMIT_NO	10	Char	
filler	1896	Char	

2.10.20.2 Accounting Record

Description	Field Length	Type	Notes
rec_type	2	Char	21
LN_NO	5	Char	
EVNT_TYP	4	Char	
ACTG_TMPL_ID	6	Char	
FUND_CD	4	Char	
SFUND_CD	4	Char	
DEPT_CD	4	Char	
UNIT_CD	4	Char	
SUNIT_CD	4	Char	
APPR_CD	9	Char	
OBJ_CD	4	Char	
SOBJ_CD	4	Char	
RSRC_CD	4	Char	
SRSRC_CD	4	Char	
DOBJ_CD	4	Char	
DRSRC_CD	4	Char	
ACTV_CD	4	Char	

SACTV_CD	4	Char	
FUNC_CD	10	Char	
SFUNC_CD	4	Char	
BSA_CD	4	Char	
SBSA_CD	4	Char	
RPT_CD	10	Char	
SRPT_CD	4	Char	
LOC_CD	4	Char	
SLOC_CD	4	Char	
TASK_CD	4	Char	
STASK_CD	4	Char	
TASK_ORD_CD	6	Char	
PROG_CD	10	Char	
PHASE_CD	6	Char	
PPC_CD	6	Char	
LN_AM	15	Char	
Filler	1902	Char	

2.10.20.3 Payment Record

Description	Field Length	Type	Notes
rec_type	2	Char	30
LN_NO	5	Char	
VEND_CUST_CD	20	Char	
TIN	9	Char	
TIN_TYP	1	Char	
AD_ID	20	Char	
CNTAC_ID	20	Char	
LGL-NM	60	Char	
ALIAS_NM	60	Char	

AD_LN_1	75	Char	
AD_LN_2	75	Char	
CITY	60	Char	
ST	2	Char	
ZIP	10	Char	
CTRY	3	Char	
DLVR_PT	10	Char	
PYMT_AM	15	Char	
CMNT	60	Char	
PYMT_CD	2	Char	
CHK_EFT_NO	15	Char	
ACH_TRAN_CD	2	Char	
ACH_RECV_ID	9	Char	
ACH_ACCT_NO	17	Char	
ACH_RECV_NM	16	Char	
DSCRE_DATA	2	Char	
TOT_ADNM_LN	4	Char	
PYMT_REMT_ADV	1500	Char	
Filler	1	Char	

2.10.21 Prov 1099 Refund Record Layout

2.10.21.1 CMN Record

Description	Field Length	Type	Notes
Batch Rec Type	1	Char	Value ‘B’
Batch Page Type	1	Char	Value ‘ ‘
Batch Tran Code	4	Char	Value ‘JVC ‘
Batch Org	4	Char	Value ‘748 ‘
Batch Prefix	1	Char	Value ‘I’
Batch Seq	5	Char	

Batch Doc Tran	4	Char	
Batch Doc Org	4	Char	
Doc Pref	3	Char	Value 999
Doc JUL	3	Char	
Doc Seq	5	Char	
Filler	1	Char	spaces

2.10.21.2 Batch Record

Description	Field Length	Type	Notes
Batch Common	36	Char	
Filler	16	Char	Spaces
Batch Number	6	Char	
Batch MMDDYY	6	Char	MMDDYY
Batch CTL Count	4	Char	
Batch Bat Count	4	Char	Spaces
Filler	421	Char	Spaces
Batch Seq Num	7	Char	

2.10.21.3 Doc Record

Description	Field Length	Type	Notes
Doc Common	36	Char	
Filler	2	Char	Value ‘JV’
Doc Trans Agcy	3	Char	Value ‘748’
Doc Trans Num	11	Char	
Doc MMDDYY	6	Char	MMDDYY
Doc Fisc MMYY	4	Char	MMYY
Doc Budget FY	2	Char	YY
Doc Action	1	Char	Value ‘E’
Doc Budget Over	12	Char	Value ‘MAP RECOVERY’

Doc Debit TTL	14	Char	999999999999.99
Doc Credit TTL	14	Char	999999999999.99
Doc Rev MMDDYY	6	Char	MMDDYY
Doc ACT DR TTL	14	Char	
Doc ACT CR TTL	14	Char	
Filler	353	Char	spaces
Doc Seq Num	7	Char	

2.10.21.4 Line Record

Description	Field Length	Type	Notes
Line Common	36	Char	
Line Acct Type	2	Char	Value ‘22’
Line Fund	4	Char	
Line Agency	3	Char	
Line Org	4	Char	Spaces
Line Activity	4	Char	Spaces
Line Rev Src	4	Char	
Line Sub Rev	2	Char	Spaces
Line BS Account	4	Char	Spaces
Line Proj Num	8	Char	
Line RPT Cat	4	Char	Spaces
Line IGR Fund	4	Char	Spaces
Line IGR AGY	3	Char	Spaces
Line Bank Acct cd	2	Char	Spaces
Line Vend Prov Ind	1	Char	
Line Vend Code	11	Char	
Line Vend Name	30	Char	Spaces
Line Vend CCN	12	Char	
Filler	1	Char	‘/’

Line Vend Prov	10	Char	
Filler	1	Char	'/'
Line Debit Amount	14	Char	999999999999.99
Line Credit Amount	14	Char	999999999999.99
Line Appr Unit	9	Char	
Line Function	4	Char	Spaces
Line Cash Ind	1	Char	Spaces
Line Termini	7	Char	Spaces
Line Ref Trans	16	Char	Value 'CR74899999999999'
Line Ref Tran Line	2	Char	Spaces
Filler	258	Char	Spaces
Line Refund Date	10	Char	
Line Seq Num	7	Char	

2.10.21.5 Control Record

Description	Field Length	Type	Notes
CNTL Rec Name	4	Char	Value 'CNTL'
CNTL Tot Recs	14	Char	
CNTL Agency	3	Char	Value '748 '
CNTL Agency Name	30	Char	Value 'DEPT FOR MEDICAID SERVICES '
CNTL Contact	30	Char	Value 'MARY RHODES '
CNTL Phone	10	Char	Value '5025645183'
CNTL System	12	Char	Value 'MAP RECOVERY'
Filler	390	Char	Spaces
CNTL Seq Num	7	Char	Value '9999999'

2.10.22 Prov 1099 Vendor Addr Record Layout

2.10.22.1 CMN Record

Description	Field Length	Type	Notes
Vendor Name	30	Char	Value ‘B’
Vendor ID	8	Char	Value ‘ ‘
Filler1	24	Char	Value ‘JVC ‘
Filler2	29	Char	Value ‘748 ‘
Filler3	1	Char	Value ‘I’
Vendor Addr1	30	Char	
Vendor Addr2	30	Char	
Vendor City	13	Char	
Vendor State	2	Char	Value 999
Vendor Zip 1-5	5	Char	
Vendor Zip 6-9	4	Char	
Filler4	8	Char	spaces
Soc Sec Num	9	Char	spaces
TIN Type	1	Char	spaces
Corp Ind	1	Char	spaces
Indiv Ind	1	Char	spaces
Partner Ind	1	Char	spaces
Filler5	3	Char	spaces

2.10.23 Provider Reimbursement

Description	Field Length	Type	Notes
COS	2	Char	
PAID AMT	13	Numeric	
PAID CLM CNT	10	Numeric	
DENIED AMT	13	Numeric	
DENIED CLM CNT	10	Numeric	
ADJUSTED AMT	13	Numeric	

ADJUSTED CLM CNT	10	Numeric	
MASS ADJUSTED AMT	13	Numeric	
MASS ADJUSTED CLM CNT	10	Numeric	
TOTAL PAID AMOUNT	13	Numeric	
TOTAL CLM CNT	10	Numeric	
SCHIP CLAIMS			
SCHIP PAID AMT	13	Numeric	
SCHIP PAID CLM CNT	10	Numeric	
SCHIP DENIED AMT	13	Numeric	
SCHIP DENIED CLM CNT	10	Numeric	
SCHIP ADJUSTED AMT	13	Numeric	
SCHIP ADJUSTED CLM CNT	10	Numeric	
SCHIP MASS ADJUSTED AMT	13	Numeric	
SCHIP MASS ADJUSTED CLM CNT	10	Numeric	
SCHIP TOTAL PAID AMOUNT	13	Numeric	
SCHIP TOTAL CLM CNT	10	Numeric	
MCHIP CLAIMS			
MCHIP PAID AMT	13	Numeric	
MCHIP PAID CLM CNT	10	Numeric	
MCHIP DENIED AMT	13	Numeric	
MCHIP DENIED CLM CNT	10	Numeric	
MCHIP ADJUSTED AMT	13	Numeric	
MCHIP ADJUSTED CLM CNT	10	Numeric	
MCHIP MASS ADJUSTED AMT	13	Numeric	
MCHIP MASS ADJUSTED CLM CNT	10	Numeric	
MCHIP TOTAL PAID	13	Numeric	

AMOUNT			
MCHIP TOTAL CLM CNT	10	Numeric	
KENPAC			
KENPAC PAID AMT	13	Numeric	
KENPAC PAID CLM CNT	10	Numeric	
KENPAC DENIED AMT	13	Numeric	
KENPAC DENIED CLM CNT	10	Numeric	
KENPAC ADJUSTED AMT	13	Numeric	
KENPAC ADJUSTED CLM CNT	10	Numeric	
KENPAC MASS ADJUSTED AMT	13	Numeric	
KENPAC MASS ADJUSTED CLM CNT	10	Numeric	
KENPAC TOTAL PAID AMOUNT	13	Numeric	
KENPAC TOTAL CLM CNT	10	Numeric	
THESE FIELDS APPLICABLE TO REGULAR CYCLES ONLY (NOT KENPAC OR LOCKIN)			
FINANCIAL DATA			
RECOUPMENT AMT	13	Numeric	
PAYOUT AMT	13	Numeric	
KCHIP FINANCIAL DATA			
MCHIP RECOUP AMT	13	Numeric	
MCHIP PAYOUT AMT	13	Numeric	
SCHIP RECOUP AMT	13	Numeric	
SCHIP PAYOUT AMT	13	Numeric	

2.10.24 Transportation RA Layout

2.10.24.1 Sort Header

Description	Field Length	Type	Notes
RA_SOT_SUBMITTER_ID	10	Char	10
RA_SOT_RA_NUM	9	Char	
RA_SOT_PROV_NUM1	10	Char	
RA_SOT_REC_ID	1	Char	
RA_SOT_PROV_NUM2	10	Char	
RA_SOT_ICN	17	Char	
RA_SOT_REC_TYPE	2	Char	
RA_SOT_DTL_NUM	2	Char	
RA_SOT_FILLER	12	Char	
FILLER	177	Char	

2.10.24.2 Provider Header 1 Record

Description	Field Length	Type	Notes
REC_TYPE	2	Char	01
PAY_TO_PROV	10	Char	
CYC_DATE	8	Char	
RA_NUM	9	Char	
CHK_NUM	12	Char	
PD_CNT	7	Char	
PD_BILL	10	Char	
PD_PAID	10	Char	
ADJ_CNT	7	Char	
ADJ_BILL	10	Char	
ADJ_PAID	10	Char	
MAS_CNT	7	Char	
MAS_BILL	10	Char	
MAS_PAID	10	Char	

DENY_CNT	7	Char	
DENY_BILL	10	Char	
PEND_CNT	7	Char	
PEND_BILL	10	Char	
BEG_CRED_BAL	10	Char	
END_CRED_BAL	10	Char	
FILLER	1	Char	

2.10.24.3 Header Record 02

Description	Field Length	Type	Notes
REC_TYPE	2	Char	02
AR_DEBIT	10	Char	
AR_CREDIT	10	Char	
AR_TT_BAL	10	Char	
BEG_POS_CRBAL	10	Char	
POS_CNT	7	Char	
POS_FEES	10	Char	
ELIG_CNTS	7	Char	
ELIG_FEES	10	Char	
END_POS_CRBAL	10	Char	
NT_CHK_AMT	10	Char	
MTD_PD_CNT	7	Char	
MTD_PD_BILL	10	Char	
MTD_PD_PAID	10	Char	
MTD_ADJ_CNT	7	Char	
MTD_ADJ_BILL	10	Char	
MTD_ADJ_PAID	10	Char	
MTD_DENY_CNT	7	Char	
MTD_DENY_BILL	10	Char	
RTD_CNT	7	Char	

FILLER	3	Char	

2.10.24.4 Header Record 03

Description	Field Length	Type	Notes
REC_TYPE	2	Char	03
YTD_PD_CNT	7	Char	
YTD_PD_BILL	10	Char	
YTD_PD_PAID	10	Char	
YTD_ADJ_CNT	7	Char	
YTD_ADJ_BILL	10	Char	
YTD_ADJ_PAID	10	Char	
YTD_DENY_CNT	7	Char	
YTD_DENY_BILL	10	Char	
AT_1099	11	Char	
AT_WITHHOLD	11	Char	
MTD_WITHHOLD	11	Char	
YTD_WITHHOLD	11	Char	
FILLER	60	Char	

2.10.24.5 Header Record 04

Description	Field Length	Type	Notes
REC_TYPE	2	Char	04
PAY_TO_PROV	10	Char	
BILL_PROV	10	Char	
CLAIM_TYPE	2	Char	
CLAIM_STATUS	2	Char	
INVOICE	20	Char	
LNAME	10	Char	
FNAME	1	Char	
MAID	10	Char	
ICN	17	Char	
FDOS	8	Char	

TDOS	8	Char	
BILL_AMT	9	Char	
PROF_COMP	9	Char	
NON_COVERED	9	Char	
OTHER_SRCS	9	Char	
PAID_AMT	9	Char	
EOB	3	Char	
DUP_EOB	3	Char	
DUP_ICN	17	Char	
DUP_PAID_DATE	8	Char	
ACT_CODE	01	Char	

2.10.24.6 Claim Adjust Record 05

Description	Field Length	Type	Notes
REC_TYPE	2	Char	05
MCARE_PAID_DATE	8	Char	
MCARE_APPR _AMT	9	Char	
MCARE_PAID_AMT	9	Char	
DEDUCTABLE	9	Char	
CONINSURANCE	9	Char	
MOM_ICN	17	Char	
MOM_PAID_DATE	8	Char	
MOM_LNAME	13	Char	
MOM_FNAME	2	Char	
MOM_MID_INI	1	Char	
MOM_MAID	10	Char	
MOM_FDOS	8	Char	
MOM_TDOS	8	Char	
MOM_BILL_AMT	9	Char	
MOM_PAID_AMT	9	Char	

FILLER	46	Char	

2.10.24.7 Claim EOB Record 06

Description	Field Length	Type	Notes
REC_TYPE	2	Char	06
NUM_DTL	2	Char	Occurs 25 times
EOB	3	Char	
FILLER	50	Char	

2.10.24.8 Claims Detail Record 08

Description	Field Length	Type	Notes
REC_TYPE	2	Char	08
NUM_DTL	2	Char	
PLACE_OF_SERV	2	Char	
ANCIL_CODE	1	Char	
REV_CODE	3	Char	
PROC_CODE	5	Char	
MODIFIER	2	Char	
RX_NUMBER	6	Char	
NDC	11	Char	
QUANTITY	5	Char	
FDOS	8	Char	
TDOS	8	Char	
BILL_AMT	9	Char	
PROF_COMP	9	Char	
NON_COVERED	9	Char	
PAID_AMT	9	Char	
EOB	3	Char	
DUP_EOB	3	Char	
DUP_ICN	17	Char	
DUP_PAID_DATE	8	Char	
LTR_FLOW	5	Char	
NUM_HRS	5	Char	
REPL_PROC	5	Char	
REPL_MOD	2	Char	
REPL_TOOTH	2	Char	
FLT_RATE	9	Char	
COPAY_AMT	5	Char	

FILLER	22	Char	

2.10.24.9 Provider Total Record 88

Description	Field Length	Type	Notes
REC_TYPE	2	Char	88
TOTAL_REC_CNT	10	Char	
FILLER	165	Char	

2.10.24.10 Summary Total Record 99

Description	Field Length	Type	Notes
REC_TYPE	2	Char	99
TOTAL_REC_CNT	10	Char	
FILLER	165	Char	

2.11 Requirement Matrix and Cross Reference

This section provides a crosswalk of each functional requirement included in the KY MMIS Requirements Checklist shown in the RFP Appendix to MMIS design components. This is accomplished by listing each requirement with its current status, associated change orders and mapped system objects.

Requirement	Status	Mapped Objects	Change Orders
30.030.009.001	No mapping required		
30.030.009.001.1	No mapping required		
30.030.009.001.2	No mapping required		
30.030.009.001.3	No mapping required		
30.030.009.001.4	No mapping required		
30.030.009.001.5	No mapping required		
30.030.009.001.6	No mapping required		
30.030.009.002	No mapping required		
30.030.009.002.1	No mapping required		
30.030.009.002.10	No mapping required		
30.030.009.002.11	No mapping required		
30.030.009.002.12	No mapping required		
30.030.009.002.13	No mapping required		
30.030.009.002.14	No mapping required		
30.030.009.002.15	No mapping required		

Requirement	Status	Mapped Objects	Change Orders
30.030.009.002.16	No mapping required		
30.030.009.002.17	No mapping required		
30.030.009.002.18	No mapping required		
30.030.009.002.19	No mapping required		
30.030.009.002.2	No mapping required		
30.030.009.002.20	No mapping required		
30.030.009.002.21	No mapping required		
30.030.009.002.22	No mapping required		
30.030.009.002.23	No mapping required		
30.030.009.002.3	No mapping required		
30.030.009.002.4	No mapping required		
30.030.009.002.5	No mapping required		
30.030.009.002.6	No mapping required		
30.030.009.002.7	No mapping required		
30.030.009.002.8	No mapping required		
30.030.009.002.9	No mapping required		
30.050.001M	RV Sign-Off CO	Fin.AccountRecBaseInformationPanel.ascx Fin.CashDispositionPanel.ascx	611 - Reports "CLIENT" to "MEMBER" 612 - Panels "Recipient" to "Member"

Requirement	Status	Mapped Objects	Change Orders
30.050.007.002.47	RV Sign-Off CO		1776 - Create legacy 8000 series rpt
30.050.007.002.7A	RV Sign-Off CO	CRA-RTPM-R	615 - rejected claims on the RA
30.050.009	Informational		
30.050.009.001	Informational		
30.050.009.001.1	Commonwealth		
30.050.009.001.2	Commonwealth		
30.050.009.001.3	Commonwealth		
30.050.009.001.4	Commonwealth		
30.050.009.001.5	Commonwealth		
30.050.009.001.6	Commonwealth		
30.050.009.002	Informational		
30.050.009.002.1	RV Sign-Off Task		
30.050.009.002.10	RV Sign-Off Task		1035 - Modify cash disp panel 1034 - Modify Cash Receipt info panel
30.050.009.002.11	RV Sign-Off Task		
30.050.009.002.12	RV Sign-Off Task		
30.050.009.002.14	RV Sign-Off CO	Fin.WithholdingInfo.ascx Fin.WithholdingDisposition.ascx Fin.WithholdingInfo.ascx - Information Fin.WithholdingInfo.ascx - Maintenance Fin.WithholdingInfoBase.ascx finp_pmt	204 - process to withold cap payment 610 - create process to withhold CAP

Requirement	Status	Mapped Objects	Change Orders
30.050.009.002.16	RV Sign-Off CO	FINJM80N FINJW800 finp7501 finp7502 finp7503 finp7504 finp7505 finp750K1 finp750K2 finp750K3 finp750L1 finp750L2 finp750L3 finp7550 finp8000 finp8050 finp9550 finp9570 FIN-8000-W FIN-800Q-Q FIN-8050-Q FIN-8050-W FIN-8055-Q FIN-8055-W	1113 - create FIN-1485-D report 1130 - Create Pre Payment Sum Repots 1140 - Create FIN-8011-W warrant trns 1145 - create FIN-8061-W expd aging 1152 - create cont recoup status by rsn 1153 - create FIN-8072-M recoup payout 1125 - Modify the FIN-9120-D AR letter 1131 - create Final Payment sum reports 1134 - duplicate RA for KenPAC Lockin 1150 - Create FIN-807I AR payouts MS 1172 - Create CMS Quartly Member AR 611 - Reports "CLIENT" to "MEMBER" 1123 - create FIN-6602-D on demand ck 1146 - create FIN-8062-W 1159 - Create FIN-8087-A rsn code 77 1178 - Create FIN-2913-M TPL refun Fin 1776 - Create legacy 8000 series rpt 615 - rejected claims on the RA 1112 - create FIN-1099-A report 1124 - Modify FIN-3000-w AR activity rp 1132 - Modify Check Registry reports 1143 - Modify FIN-2055-W 1149 - Create FIN-807E-M Non Lockbox 1155 - create FIN-8080-M collections rp 1175 - Create FIN-27052-W dms unwork 1176 - Create FIN2911 TPL

Requirement	Status	Mapped Objects	Change Orders
			Refund-Recovy 1177 - create FIN-2912-M TPL refun sum 1116 - Create Contractor AR on hold 1117 - create contractor no prov rpts 1118 - Create Contractr AR staus S rpts 1133 - Add Mass Adj sec to the Prov RA 1147 - Create FIN-8065-W 270 past due 205 - RA layout add MTD, AR scheds 1115 - create contractor AR error rpts 1171 - Create CMS Quarterly AR reports 1111 - create FIN-7950-W report 1119 - Create FIN-1750-W on hold >45 1120 - Modify FIN-5000-Q report 1129 - create FIN-6900-W claim splt sum 1144 - Modify FIN-3001-W AR AGING 1148 - create FIN-807E-M recovy MS 1173 - Modify FIN-1907-D check verify 1180 - Create FIN-2916-M TPL ref 1777 - create the Quarterly TPL RRR rpt 1114 - Create contractor AR gener rpts 1127 - FIN-6625-W CREATE 1157 - Create FIN-8084-M DRG review 1158 - create FIN-8095-W mass adj rpt 1174 - Modify FIN-1008-W 1179 - Create FIN-2914-M TPL Ref TPL

Requirement	Status	Mapped Objects	Change Orders
30.050.009.002.17	RV Sign-Off CO	FINJRPMT	201 - expenditure extract format 614 - TPL F&A interfaces 202 - provider 1099 layouts 207 - txns processed outside MMIS 208 - create check/eft file
30.050.009.002.18	RV Sign-Off Task		
30.050.009.002.19	RV Sign-Off Task		
30.050.009.002.2	RV Sign-Off CO	CRA-SUMM-R CRA-TRAN-R	205 - RA layout add MTD, AR scheds
30.050.009.002.20	RV Sign-Off Task		
30.050.009.002.21	RV Sign-Off Task		
30.050.009.002.22	RV Sign-Off Task		
30.050.009.002.23	RV Sign-Off Task		
30.050.009.002.24	RV Sign-Off Task		
30.050.009.002.4	RV Sign-Off Task		
30.050.009.002.5	RV Sign-Off Task		
30.050.009.002.6	RV Sign-Off Task		
30.050.009.002.7	RV Sign-Off Task		
30.050.009.002.9	RV Sign-Off Task		
30.090.003.002.12B	RV Sign-Off CO		1217 - modify the financial extractor 2218 - Update KY with NPI and Core fix

Requirement	Status	Mapped Objects	Change Orders
30.090.003.002.28	RV Sign-Off CO	Fin.AccountRecInformation.ascx Fin.AccountRecSearchPanel.ascx Fin.ExpenditureInformationSummary.ascx Fin.ExpenditureSearchPanel.ascx FARI Related Claim Fin. EntityMaintenancePanel.ascx - ArCommentsList.cs Fin.AccountRecBaseInformationPanel.ascx Fin.ArDispPanel.ascx Fin.ExpenditureBasePanel.ascx Fin.ExpenditureCommentPanel.ascx finp_budg_main finp_upT_cash finp_upT_exp	2218 - Update KY with NPI and Core fix 602 - payment panel sort and total
30.090.003.002.31	RV Sign Off	FINJ1099_10 Fin.X1099DetailInformation.ascx Prov.ProviderSearchPage.ascx Fin.X1099DetailInformation.ascx-Maintenance Fin.X1099DetailSearchPanel.ascx Prov.ProviderTaxID.ascx finp1573 finp1579	
30.090.003.002.32	RV Sign-Off CO	finp1550	202 - provider 1099 layouts
30.090.003.002.33	RV Sign Off	Fin.RelatedData.ascx - Other 835 Constants 835ContactPanel Prov.ProviderEFTAccount.ascx Prov.ProviderServiceLocation.ascx fin2003d fin_277_process finp1169 finp1289	

Requirement	Status	Mapped Objects	Change Orders
		finp1951 finp1952 finp_RA finptrac FIN-6006-W	
30.090.003.003.14	RV Sign Off	Fin. PaymentInformation.ascx Fin.AccountRecInformation.ascx Fin.AccountRecSearchPanel.ascx Fin.CheckSearchPanel.ascx Fin.ExpenditureInformationSummary.ascx Fin.ExpenditureSearchPanel.ascx FPI Related Claims Fin.AccountRecSearchPanel.ascx - Results Fin.ExpenditureSearchPanel.ascx - Results Fin.FinPayeeSearchPanel.ascx - Results Fin.StopPaymentPanel.ascx Fin.VoidSystemPaymentPanel.ascx	
30.090.003.003.16	RV Sign Off	Fin. PaymentInformation.ascx Fin.CheckSearchPanel.ascx	
30.090.003.003.17	RV Sign Off	FINJ1099_10 FINJ1099_40 FINJ1099_50 FINJ1099_TAPE fin5002a finp1550 finp1573 FIN-5002-A FIN-5011-A	
30.090.003.004.4	RV Sign-Off CO	FINJ1099_40 finp1550 finp1573	202 - provider 1099 layouts
30.090.004.002.21A	RV Sign Off		
30.090.007.002.1B	RV Sign-Off CO		609 - AR aging and letters for batch 608 - AR aging date changes

Requirement	Status	Mapped Objects	Change Orders
30.090.007.002.2D	RV Sign Off	FIN-0005-W FIN-1620-D FIN-1906-D FIN-1907-D FIN-1908-D FIN-1909-D FIN-3004-W FIN-3005-M	
30.090.007.002.63	RV Sign Off	CRA-0001-W CRA-0002-W CRA-0003-W CRA-0004-W CRA-0109-W CRA-0110-W CRA-0111-W CRA-0112-W CRA-DNAD-R CRA-DNDN-R CRA-DNPD-R CRA-DNSU-R CRA-EOBM-R CRA-HHAD-R CRA-HHDN-R CRA-HHPD-R CRA-HHSU-R CRA-IPAD-R CRA-IPDN-R CRA-IPPD-R CRA-IPSU-R CRA-LTAD-R CRA-LTDN-R CRA-LTPD-R CRA-LTSU-R CRA-OPAD-R CRA-OPDN-R CRA-OPPD-R CRA-OPSU-R CRA-PRAD-R CRA-PRDN-R CRA-PRPD-R CRA-PRSU-R CRA-XAAD-R CRA-XADN-R CRA-XAPD-R CRA-XASU-R CRA-XBAD-R CRA-XBDN-R CRA-XBPD-R	

Requirement	Status	Mapped Objects	Change Orders
		CRA-XBSU-R	
30.090.007.002.69B	RV Sign Off	Fin.AccountRecSearchPanel.ascx Fin.CheckSearchPanel.ascx Fin.ExpenditureSearchPanel.ascx	
30.090.007.002.70	RV Sign Off	Fin.AccountRecInformation.ascx Fin.AccountRecSearchPanel.ascx Fin.CashReceiptInformation.ascx Fin.ExpenditureInformationSummary.ascx Fin.ExpenditureSearchPanel.ascx Fin.FinancialCashReceiptSearchPanel.ascx Fin.LienInformation.ascx Fin.LienSearchPanel.ascx	
30.090.007.002.74	RV Sign-Off Task		
30.090.007.002.76A	RV Sign Off	finp_pmt	
30.090.007.003.13A	RV Sign-Off CO	FIN-6900-W	1129 - create FIN-6900-W claim splt sum
30.090.007.003.15	RV Sign-Off CO	FINJD230 FIN-1431-W FIN-1602-W	1130 - Create Pre Payment Sum Repots 1131 - create Final Payment sum reports 1776 - Create legacy 8000 series rpt 1777 - create the Quarterly TPL RRR rpt
30.090.007.003.16	RV Sign Off	FIN-0005-W	
30.090.007.004.1A	RV Sign-Off CO		1152 - create cont recoup status by rsn 1150 - Create FIN-807I AR payouts MS 614 - TPL F&A interfaces 1149 - Create FIN-807E-M Non Lockbox 1116 - Create Contractor AR on hold

Requirement	Status	Mapped Objects	Change Orders
			1117 - create contractor no prov rpts 1118 - Create Contractr AR staus S rpts 1115 - create contractor AR error rpts 1148 - create FIN-807E-M recovy MS 1114 - Create contractor AR gener rpts
30.090.009	Informational		
30.090.009.001	Informational		
30.090.009.001.1	RV Sign Off	FINJDSCHCLAIM FINJRDNTL FINJRPHRM FINJRPHYS FINJRUB92 FRDO Scheduling Maintenance` finp_extr_dntl finp_extr_pharm finp_extr_ub92 finp_extractors finp_sched_claims finp_sched_main tpl0039m	
30.090.009.001.2	RV Sign Off	FINJDSCHCAP FINJDSCHMAIN FRDO Scheduling Maintenance` finp_sched_cap finp_sched_main	
30.090.009.001.3	RV Sign Off	FINJDSCHAR FINJDSCHCASH FINJDSCHEXP FINJDSCHMAIN FINJDSCHVOIDS Clm.AdjustmentInformationPage.ascx Clm.ClaimsMassAdjustmentInformationPage.ascx Fin.AccountRecInformation.ascx Fin.CashReceiptInformation.ascx	

Requirement	Status	Mapped Objects	Change Orders
		Fin.ExpenditureInformationSummary.ascx Fin.LienInformation.ascx FRDO Scheduling Maintenance` finp_sched_ar finp_sched_cash finp_sched_exp finp_sched_main finp_sched_voids	
30.090.009.001.4	RV Sign Off	FINJDSCHCLAIM FINJDSCHMAIN FINJRUB92 FRDO Scheduling Maintenance` finp_extr_dntl finp_extr_ub92 finp_extractors finp_sched_claims finp_sched_main	
30.090.009.001.5	RV Sign Off		
30.090.009.002	Informational		
30.090.009.002.1	RV Sign Off	FINJDSCHCLAIM FINJDSCHMAIN FINJDSCH_FINAL FINJRDNTL FINJRPHRM FINJRPHYS FINJRUB92 FRDO Scheduling Maintenance` Fin.PrudentPayPanel.ascx finp_extractors finp_sched_claims	
30.090.009.002.11	RV Sign Off	CLHJD030 FINJD207 FINJD209 finp_pmt CLM-0018-D CRA-TPLM-R CRA-TRAN-R FIN-2051-W FIN-3000-W FIN-3001-W FIN-3002-W	

Requirement	Status	Mapped Objects	Change Orders
		FIN-3003-W FIN-3004-W	
30.090.009.002.14	RV Sign Off	FINJDSCHCLAIM FINJRDNTL FINJRPHRM FINJRPHYS FINJRUB92 finp_extr_dntl finp_extr_pharm finp_extr_ub92 finp_extractors finp_pmt CRA-0004-W CRA-0112-W CRA-DNAD-R CRA-HHAD-R CRA-LTAD-R CRA-OPAD-R CRA-XAAD-R CRA-XBAD-R	
30.090.009.002.15	RV Sign Off	FINJDSCHCLAIM FINJRDNTL FINJRPHRM FINJRPHYS FINJRUB92 finp_extr_dntl finp_extr_pharm finp_extr_ub92 finp_extractors finp_pmt CRA-0004-W CRA-0112-W CRA-DNAD-R CRA-HHAD-R CRA-LTAD-R CRA-OPAD-R CRA-XAAD-R CRA-XBAD-R	
30.090.009.002.2	RV Sign Off	FINJRPMT Fin.AccountRecInformation.ascx FARI Force Collection FARI Letter History FARI Related Claim Fin. EntityMaintenancePanel.ascx - ArCommentsList.cs	1215 - Modify the pruduent pay process

Requirement	Status	Mapped Objects	Change Orders
		Fin.AccountRecBaseInformationPanel.ascx Fin.ArDispPanel.ascx fin_ar_close finp1184 finp_pmt	
30.090.009.002.27	RV Sign-Off CO	Fin. PaymentInformation.ascx FPI Related Claims	203 - add totals to pmt related txn
30.090.009.002.28	RV Sign-Off CO	Fin.WithholdingInfo.ascx Fin.WithholdingSearch.ascx Fin.WithholdingInfo.ascx - Information Fin.WithholdingInfo.ascx - Maintenance Fin.WithholdingInfoBase.ascx Fin.WithholdingSearch.ascx - Results Fin.WithholdingSearch.ascx - Search finp_pmt	1213 - create withholding tbls 204 - process to withold cap payment 610 - create process to withhold CAP
30.090.009.002.29	RV Sign-Off CO	Fin.WithholdingDisposition.ascx finp_pmt	1213 - create withholding tbls 610 - create process to withhold CAP
30.090.009.002.3	RV Sign-Off CO	finp_RA CRA-0001-W CRA-0002-W CRA-0003-W CRA-0004-W CRA-0109-W CRA-0110-W CRA-0111-W CRA-0112-W CRA-DNAD-R CRA-DNDN-R CRA-DNPD-R CRA-DNSU-R CRA-EOBM-R CRA-HHAD-R CRA-HHDN-R CRA-HHPD-R CRA-HHSU-R CRA-IPDN-R CRA-IPPD-R CRA-IPSU-R CRA-LTAD-R CRA-LTDN-R	1134 - duplicate RA for KenPAC Lockin 615 - rejected claims on the RA 1133 - Add Mass Adj sec to the Prov RA 205 - RA layout add MTD, AR scheds 1204 - CreateT_FIN_REMIT table 1214 - Add RA number into the system

Requirement	Status	Mapped Objects	Change Orders
		CRA-LTPD-R CRA-LTSU-R CRA-OPAD-R CRA-OPDN-R CRA-OPPD-R CRA-OPSU-R CRA-PRAD-R CRA-PRDN-R CRA-PRPD-R CRA-PRSU-R CRA-SUMM-R CRA-TPLM-R CRA-TRAN-R CRA-XAAD-R CRA-XADN-R CRA-XAPD-R CRA-XASU-R CRA-XBAD-R CRA-XBDN-R CRA-XBPD-R CRA-XBSU-R	
30.090.009.002.32	RV Sign Off	Clm.AdjustmentInformationPage.ascx Fin. PaymentInformation.ascx Fin.AccountRecInformation.ascx Fin.AccountRecSearchPanel.ascx Fin.CashReceiptInformation.ascx Fin.CheckSearchPanel.ascx Fin.ExpenditureInformationSummary.ascx Fin.ExpenditureSearchPanel.ascx Fin.FinancialCashReceiptSearchPanel.ascx Fin. EntityMaintenancePanel.ascx - CashComment.cs Cl.Adjustment InformationMaint Clm.AdjustmentNetVerificationPanel.ascx Clm.AdjustmentSearchPanel.ascx Clm.AdjustmentSearchPanel.ascx - Search Results	9162 - Manual Recoup=M not processing

Requirement	Status	Mapped Objects	Change Orders
		FPI Related Claims Fin. EntityMaintenancePanel.ascx - ArCommentsList.cs Fin.AccountRecBaseInformationPanel.ascx Fin.ArDispPanel.ascx Fin.CashDispositionPanel.ascx Fin.CashReceiptBasePanel.ascx Fin.ExpenditureBasePanel.ascx Fin.FinancialCashReceiptSearchPanel.ascx - Results Fin.StopPaymentPanel.ascx Fin.VoidSystemPaymentPanel.ascx finp_pmt	
30.090.009.002.33	RV Sign-Off CO	Fin.AccountRecInformation.ascx Fin.AccountRecSearchPanel.ascx Fin.LienInformation.ascx Fin.LienSearchPanel.ascx FARI Related Claim Fin. EntityMaintenancePanel.ascx - ArCommentsList.cs Fin.AccountRecBaseInformationPanel.ascx Fin.ArDispPanel.ascx Fin.LienBaseInformationPanel.ascx Fin.LienDispPanel.ascx	688 - Modify AR Information 692 - modify the AR search page/panel 206 - add fields to AR panel 609 - AR aging and letters for batch 1199 - ModifyT_ACT_REC table add flds 700 - Modify the AR base info panel 694 - Modfiy AR comments panel
30.090.009.002.34	RV Sign-Off CO	FIN-170A-R FIN-1750-W FIN-17XX1-R FIN-17XX2-R FIN-17XX3-R FIN-17XX4-R FIN-17XX5-R FIN-1803-R FIN-18xx1-R FIN-18xx3-R FIN-8071-M FIN-8072-M	606 - Enhance EFT processing 1152 - create cont recoup status by rsn 1153 - create FIN-8072-M recoup payout 1150 - Create FIN-807I AR payouts MS 1159 - Create FIN-8087-A rsn code 77 614 - TPL F&A interfaces 1149 - Create FIN-807E-M Non Lockbox

Requirement	Status	Mapped Objects	Change Orders
		FIN-8076-M FIN-8077-M FIN-807E1-M FIN-807E2-M FIN-807I-M FIN-8080-M FIN-8082-M FIN-8084-M FIN-8087-SFY	1155 - create FIN-8080-M collections rp 1116 - Create Contractor AR on hold 1117 - create contractor no prov rpts 1118 - Create Contractr AR staus S rpts 207 - txns processed outside MMIS 1115 - create contractor AR error rpts 1223 - Modify the reissue check void 1119 - Create FIN-1750-W on hold >45 1114 - Create contractor AR gener rpts 1157 - Create FIN-8084-M DRG review
30.090.009.002.35	RV Sign Off	Fin. EntityMaintenancePanel.ascx - CashComment.cs Fin. EntityMaintenancePanel.ascx - ArCommentsList.cs Fin.ExpenditureCommentPanel.ascx finp_bal_ar finp_bal_budg finp_bal_cap finp_bal_chk finp_bal_cycle finp_bal_exp finp_bal_ref finp_bal_voi finp_bal_xref FIN-0005-W FIN-0008-W FIN-0009-W FIN-0010-W FIN-0011-W FIN-0012-W FIN-0013-W FIN-0014-W FIN-0018-W	
30.090.009.002.36	RV Sign-Off	Fin. PaymentInformation.ascx	688 - Modify AR Information

Requirement	Status	Mapped Objects	Change Orders
	CO	Fin.AccountRecInformation.ascx Fin.AccountRecSearchPanel.ascx Fin.CheckSearchPanel.ascx FARI Force Collection FARI Letter History FARI Related Claim FPI Related Claims Fin. EntityMaintenancePanel.ascx - ArCommentsList.cs Fin.AccountRecBaseInformationPanel.ascx Fin.ArDispPanel.ascx Fin.StopPaymentPanel.ascx Fin.VoidSystemPaymentPanel.ascx	692 - modify the AR search page/panel 705 - Modify expenditure comment panel 1205 - ModifyT_EXPENDITURE add fields 1035 - Modify cash disp panel 206 - add fields to AR panel 1092 - add AR rollup panel to the AR pg 404 - Add prov specialty to fiscal pen 693 - modify AR results panel 701 - Modify the Expenditure search 702 - Modify expenditure results panel 1198 - Payment Hold Include Exclude Ind 1203 - ModifyT_CASH_RECEIPT table add 700 - Modify the AR base info panel 1040 - Modify Payment Results panel 1041 - Modify Prudent Pay Panel 1126 - create FIN-6604B-D letter 1206 - AddT_FIN_PRUDET_PAY_P and type 604 - Modify AR disp panel 627 - Create payment plan process 703 - modify expenditure info page/pan 704 - Modify expenditure base info 1039 - Modify Payment Search panel 1201 - addT_LIEN_COMMENT table 1223 - Modify the reissue check void 203 - add totals to pmt related txn

Requirement	Status	Mapped Objects	Change Orders
			694 - Modfiy AR comments panel 1034 - Modify Cash Receipt info panel 1038 - Add Lien Comment panel 602 - payment panel sort and total 605 - create AR letter tracking 608 - AR aging date changes 610 - create process to withhold CAP 612 - Panels "Recipient" to "Member" 1036 - Modify Lien information panel 1037 - Modify lien disp panel 1042 - modify Banner Maint panel 1202 - ModifyT_CASH_RCT_DISP add flds
30.090.009.002.37	RV Sign-Off CO	Fin.AccountRecInformation.ascx Fin. EntityMaintenancePanel.ascx - ArCommentsList.cs Fin.AccountRecBaseInformationPanel.ascx Fin.ArPaymentPlanPanel.ascx Fin.RollupArPanel.ascx finp_pmt FIN-6625-W	1093 - don't recoup from cap payments 1220 - new AR status 1090 - multiple claims tied to an AR 1108 - createT_FIN_ROLLUP_AR table 627 - Create payment plan process 1222 - KenPAC cycles don't recoup 2218 - Update KY with NPI and Core fix 1219 - Create payment plan process 1127 - FIN-6625-W CREATE 1212 - CreateT_AR_PAYMET_PLAN table
30.090.009.002.38	RV Sign-Off CO	Fin.AccountRecInformation.ascx FARI Related Claim Fin.ArDispPanel.ascx finp_pmt	604 - Modify AR disp panel

Requirement	Status	Mapped Objects	Change Orders
30.090.009.002.39	RV Sign Off	Fin.ArDispPanel.ascx Fin.CashDispositionPanel.ascx Fin.ExpenditureBasePanel.ascx Fin.LienDispPanel.ascx Fin.LienInformation.ascx - Maintenance FIN-1703-M FIN-1912-M FIN-2055-W FIN-3002-W	
30.090.009.002.4	RV Sign Off	finp_RA CRA-0001-W CRA-0002-W CRA-0003-W CRA-0004-W CRA-0109-W CRA-0110-W CRA-0111-W CRA-0112-W CRA-DNAD-R CRA-DNDN-R CRA-DNPD-R CRA-DNSU-R CRA-HHAD-R CRA-HHDN-R CRA-HHPD-R CRA-HHSU-R CRA-IPAD-R CRA-IPDN-R CRA-IPPD-R CRA-IPSU-R CRA-LTAD-R CRA-LTDN-R CRA-LTPD-R CRA-LTSU-R CRA-OPAD-R CRA-OPDN-R CRA-OPPD-R CRA-OPSU-R CRA-PRAD-R CRA-PRDN-R CRA-PRPD-R CRA-PRSU-R CRA-XAAD-R CRA-XADN-R CRA-XAPD-R	

Requirement	Status	Mapped Objects	Change Orders
		CRA-XASU-R CRA-XBAD-R CRA-XBDN-R CRA-XBPD-R CRA-XBSU-R	
30.090.009.002.40	RV Sign-Off CO	Fin.AccountRecInformation.ascx Fin.CashReceiptInformation.ascx FARI Related Claim Fin.ArDispPanel.ascx Fin.ArPaymentPlanPanel.ascx Fin.CashDispositionPanel.ascx Fin.RollupArPanel.ascx finp_pmt	1092 - add AR rollup panel to the AR pg 605 - create AR letter tracking
30.090.009.002.41	RV Sign Off	FINJ1099_10 FINJ1099_40 FINJ1099_50 FINJ1099_LOAD FINJ1099_TAPE FINJA001 Fin.X1099DetailInformation.ascx F1099 1099 Adjustment Fin.X1099DetailInformation.ascx-Maintenance Fin.X1099DetailSearchPanel.ascx fin5002a finp1547 finp1550 finp1573 finp1579	
30.090.009.002.42	RV Sign Off	Fin.X1099DetailInformation.ascx F1099 1099 Adjustment finp_pmt	
30.090.009.002.43	RV Sign-Off Task	Fin. PaymentInformation.ascx Fin.CashReceiptInformation.ascx Fin. EntityMaintenancePanel.ascx - CashComment.cs FPI Related Claims	1041 - Modify Prudent Pay Panel 1129 - create FIN-6900-W claim splt sum

Requirement	Status	Mapped Objects	Change Orders
		Fin.CashDispositionPanel.ascx Fin.CashReceiptBasePanel.ascx Fin.StopPaymentPanel.ascx Fin.VoidSystemPaymentPanel.ascx finp_reissues	
30.090.009.002.44	RV Sign Off	Fin.ExpenditureInformationSummary.ascx Fin.ExpenditureSearchPanel.ascx FEI IRS W9 Tax Info FEI Non Provider Tax ID Fin.ExpenditureBasePanel.ascx Fin.ExpenditureCommentPanel.ascx Fin.ExpenditureSearchPanel.ascx - Results FIN-2050-W FIN-2055-W FIN-9110-C-EXP FIN-9110-O-EXP	705 - Modify expenditure comment panel 701 - Modify the Expenditure search 702 - Modify expenditure results panel 703 - modify expenditure info page/pan 704 - Modify expenditure base info
30.090.009.002.45	RV Sign Off	Fin.LienInformation.ascx Fin.LienBaseInformationPanel.ascx Fin.LienDispPanel.ascx Fin.NonProvAddressPanel.ascx finp_pmt FIN-4000-W	1038 - Add Lien Comment panel 1037 - Modify lien disp panel
30.090.009.002.46	RV Sign Off	fin3005w finp3001 finp3003 FIN-3000-W FIN-3001-W FIN-3002-W FIN-AR1-D FIN-AR2-D	
30.090.009.002.47	RV Sign-Off CO	Fin.AccountRecInformation.ascx FARI Force Collection finp_pmt FIN-9100-D-LIEN FIN-9120-R	609 - AR aging and letters for batch

Requirement	Status	Mapped Objects	Change Orders
		FIN-9121-R FIN-9123-D FIN-9124-M	
30.090.009.002.48	RV Sign Off	Fin.ExpenditureInformationSummary.ascx Fin.ExpenditureSearchPanel.ascx FEI IRS W9 Tax Info FEI Non Provider Tax ID Fin.ExpenditureBasePanel.ascx Fin.ExpenditureCommentPanel.ascx Fin.ExpenditureSearchPanel.ascx - Results finc2050 finc2051 FIN-1650-W FIN-2050-W	
30.090.009.002.49	RV Sign Off	FINJDPRE_PROV Fin. PaymentInformation.ascx Fin.AccountRecInformation.ascx Fin.ExpenditureInformationSummary.ascx FPI Related Claims Fin.AccountRecBaseInformationPanel.ascx Fin.ExpenditureBasePanel.ascx FIN-3001-W FIN-3004-X	2218 - Update KY with NPI and Core fix
30.090.009.002.5	RV Sign Off	Fin.CheckBannerInformation.ascx CheckBanner CheckBannerClaimType CheckBannerPrEnrollPgm CheckBannerProvID CheckBannerProvSpec CheckBannerProvType FB RA Banner FB RA Banner Information Fin.CheckBannerPanel.ascx finp_RA	2218 - Update KY with NPI and Core fix 1042 - modify Banner Maint panel
30.090.009.002.50	RV Sign Off	Fin.AccountRecInformation.ascx	

Requirement	Status	Mapped Objects	Change Orders
		Fin.CashReceiptInformation.ascx Fin. EntityMaintenancePanel.ascx - CashComment.cs FARI Related Claim Fin. EntityMaintenancePanel.ascx - ArCommentsList.cs Fin.AccountRecBaseInformationPanel.ascx Fin.ArDispPanel.ascx Fin.CashDispositionPanel.ascx Fin.CashReceiptBasePanel.ascx	
30.090.009.002.51	RV Sign-Off CO		1172 - Create CMS Quartly Member AR 1178 - Create FIN-2913-M TPL refun Fin 1175 - Create FIN-27052-W dms unwork 1176 - Create FIN2911 TPL Refund-Recovy 1177 - create FIN-2912-M TPL refun sum 1221 - Changes to CASH tracking 1171 - Create CMS Quarterly AR reports 1180 - Create FIN-2916-M TPL ref 1179 - Create FIN-2914-M TPL Ref TPL
30.090.009.002.6	RV Sign Off	FINJRPMT fin_extr finp_pmt CRA-TRAN-R	
30.090.009.002.7	RV Sign-Off CO	FINJ1099_10 FINJD209 Fin.X1099DetailInformation.ascx F1099 1099 Adjustment Fin.X1099DetailInformation.ascx-Maintenance Fin.X1099DetailSearchPanel.ascx	

Requirement	Status	Mapped Objects	Change Orders
		finp1573 finp_pmt	
30.090.009.002.8	RV Sign-Off CO	FINJRPHLD Fin.PaymentHoldInformation.ascx Fin. PaymentHoldPanel.ascx PaymentHoldClmMedia PaymentHoldClmType PaymentHoldFundCode PaymentHoldHlthPgm PaymentHoldPayType PaymentHoldProvIDLoc PaymentHoldProvType fin_paymeT_holds	1210 - ModifyT_PAYMET_HOLD add new 404 - Add prov specialty to fiscal pen 1198 - Payment Hold Include Exclude Ind 1216 - Modify fiscal pend add pr spec
30.090.009.003	Informational		
30.090.009.003.1	RV Sign-Off CO	CRA-SUMM-R FIN-0008-W FIN-0009-W FIN-0010-W FIN-0011-W FIN-0012-W FIN-0013-W FIN-0014-W FIN-0100-Q FIN-0550-D FIN-1005-W FIN-1008-W FIN-1099-A FIN-1099-B FIN-1115-W FIN-1330-W FIN-1331-W FIN-1332-W FIN-1333-W FIN-1430-W FIN-1431-W FIN-1432-W FIN-1433-W FIN-1434-W FIN-1435-W FIN-1440-W FIN-1485-D FIN-1601-W FIN-1602-W FIN-1604-W FIN-1605-W FIN-1607-M	1113 - create FIN-1485-D report 1130 - Create Pre Payment Sum Repots 1140 - Create FIN-8011-W warrant trns 1145 - create FIN-8061-W expd aging 1152 - create cont recoup status by rsn 1153 - create FIN-8072-M recoup payout 1125 - Modify the FIN-9120-D AR letter 1131 - create Final Payment sum reports 1134 - duplicate RA for KenPAC Lockin 1150 - Create FIN-807I AR payouts MS 1172 - Create CMS Quartly Member AR 611 - Reports "CLIENT" to "MEMBER" 1123 - create FIN-6602-D on demand ck 1146 - create FIN-8062-W 1159 - Create FIN-8087-A rsn code 77 1178 - Create FIN-2913-M TPL refun Fin 1776 - Create legacy 8000

Requirement	Status	Mapped Objects	Change Orders
		FIN-1608-M FIN-1609-M FIN-1610-M FIN-1611-M FIN-1613-M FIN-1620-D FIN-1650-W FIN-1703-M FIN-1801-A FIN-1802-Q FIN-1803-M FIN-1906-D FIN-1907-D FIN-1908-D FIN-1909-D FIN-1910-M FIN-1911-M FIN-1912-M FIN-2003-D FIN-2004-D FIN-2050-W FIN-2051-W FIN-2053-W sa s s FIN-2055-W FIN-2752-W FIN-2911-M FIN-2912-M FIN-2913-M FIN-2914-M FIN-2916-M FIN-3000-D FIN-3000-W FIN-3001-W FIN-3002-W FIN-3003-W FIN-3004-W FIN-3005-M FIN-3010-W FIN-4000-W FIN-4050-W FIN-4051-W FIN-4052-W FIN-5001-A FIN-5010-A FIN-6006-W FIN-6007-W FIN-6602-D FIN-6604A-D FIN-6604B-D	series rpt 615 - rejected claims on the RA 1112 - create FIN-1099-A report 1124 - Modify FIN-3000-w AR activity rp 1132 - Modify Check Registry reports 1143 - Modify FIN-2055-W 1149 - Create FIN-807E-M Non Lockbox 1155 - create FIN-8080-M collections rp 1175 - Create FIN-27052-W dms unwork 1176 - Create FIN2911 TPL Refund-Recovy 1177 - create FIN-2912-M TPL refun sum 1116 - Create Contractor AR on hold 1117 - create contractor no prov rpts 1118 - Create Contractr AR staus S rpts 1126 - create FIN-6604B-D letter 1133 - Add Mass Adj sec to the Prov RA 1147 - Create FIN-8065-W 270 past due 1221 - Changes to CASH tracking 8814 - I3455 205 - RA layout add MTD, AR scheds 1115 - create contractor AR error rpts 1171 - Create CMS Quarterly AR reports 1111 - create FIN-7950-W report 1119 - Create FIN-1750-W on hold >45 1120 - Modify FIN-5000-Q report 1129 - create FIN-6900-W claim splt sum

Requirement	Status	Mapped Objects	Change Orders
		FIN-700-W FIN-700K-W FIN-700L-W FIN-7501-W FIN-7502-W FIN-7503-W FIN-7504-W FIN-7505-W FIN-750K1-M FIN-750K2-M FIN-750K3-M FIN-750K4-M FIN-750L1-M FIN-750L2-M FIN-750L3-M FIN-750L4-M FIN-7550-W FIN-7950-W FIN-8011-W FIN-8025-A FIN-8025-M FIN-8025-W FIN-8051-W FIN-8053-W FIN-8061-W FIN-8062-W FIN-8065-W FIN-8095-W FIN-9551-Q FIN-9552-Q FIN-9553-Q FIN-9571-Q FIN-9572-Q FIN-9573-Q FIN-ERR-W FIN-RECID-W	1144 - Modify FIN-3001-W AR AGING 1148 - create FIN-807E-M recovy MS 1173 - Modify FIN-1907-D check verify 1180 - Create FIN-2916-M TPL ref 1777 - create the Quarterly TPL RRR rpt 1114 - Create contractor AR gener rpts 1127 - FIN-6625-W CREATE 1157 - Create FIN-8084-M DRG review 1158 - create FIN-8095-W mass adj rpt 1174 - Modify FIN-1008-W 1179 - Create FIN-2914-M TPL Ref TPL
30.090.009.003.2	RV Sign Off	FINJR_RA FINJR_RA_CLD fin_277_process	
30.090.009.003.3	RV Sign-Off CO	FINJRPMT FINJW250	208 - create check/eft file
30.090.009.003.4	RV Sign Off	FINJDSCHEXP Fin.ExpenditureInformationSummary.ascx FRDO Scheduling Maintenance`	

Requirement	Status	Mapped Objects	Change Orders
		finp_sched_exp	
30.090.009.004	Informational		
30.090.009.004.1	RV Sign-Off CO	FINJ1099_40 FINJRLPYMT FINJRPMT FINJW250	202 - provider 1099 layouts 613 - provider refund interface 208 - create check/eft file
30.090.009.004.2	RV Sign-Off CO	FINJDSCHAR	614 - TPL F&A interfaces
30.090.012.001.6A	RV Sign Off		
30.090.012.002.5A	RV Sign-Off CO		614 - TPL F&A interfaces 1116 - Create Contractor AR on hold 1117 - create contractor no prov rpts 1118 - Create Contractr AR staus S rpts 1115 - create contractor AR error rpts 1114 - Create contractor AR gener rpts
30.090.012.002.6A	RV Sign-Off CO	FIN-2911-M FIN-2912-M FIN-2913-M FIN-2914-M FIN-2916-M	1178 - Create FIN-2913-M TPL refun Fin 1176 - Create FIN2911 TPL Refund-Recovy 1177 - create FIN-2912-M TPL refun sum 1180 - Create FIN-2916-M TPL ref 1179 - Create FIN-2914-M TPL Ref TPL
30.090.012.002.7A	EDS Met		
30.090.012.002.9A	RV Sign-Off CO	FIN-0005-W	1130 - Create Pre Payment Sum Repots 1131 - create Final Payment sum reports 1155 - create FIN-8080-M collections rp 1129 - create FIN-6900-W claim splt sum
30.100.003.007	No mapping required		

Requirement	Status	Mapped Objects	Change Orders
30.100.009	No mapping required		
30.100.009.001	No mapping required		
30.100.009.002	No mapping required		
30.100.009.003	No mapping required		
30.100.009.004	No mapping required		
30.100.009.005	No mapping required		
30.100.009.006	No mapping required		
30.100.009.007	No mapping required		
30.110.003.006	RV Sign-Off Task		
30.110.007.020A	RV Sign-Off Task		
30.110.008.010A	RV Sign-Off Duplicate		
30.110.009	Informational		
30.110.009.001	Informational		
30.110.009.002	RV Sign-Off Duplicate		
30.110.009.003	RV Sign-Off Duplicate		
30.110.009.004	RV Sign-Off Duplicate		
30.110.009.005	RV Sign-Off Duplicate		
30.110.009.006	RV Sign-Off Duplicate		

Requirement	Status	Mapped Objects	Change Orders
30.110.009.008	RV Sign-Off Task		
30.110.009.009	RV Sign-Off Task		
30.110.009.010	RV Sign-Off Task		
30.110.009.011	Informational		
30.110.009.012	RV Sign-Off Task		9161 - Modify FIN outbound for warrant
30.110.009.013	RV Sign-Off Task		
30.110.009.014	RV Sign-Off Task		
30.110.009.015	RV Sign-Off Task		
30.110.009.016	RV Sign-Off Task		
30.110.009.017	RV Sign-Off Duplicate		
40.075.060.011	RV Sign-Off Task		
40.075.060.012	RV Sign-Off Task		

2.12 Change Orders

Note: Change Orders with a status of “Cancelled” at the time this document was prepared are not included in this document.

2.12.1 Expenditure Extract Format - 201

Identifier	Type	Level	Subsystem	Computed	Estimated	Priority
201	Change Order		Financial			1

2.12.1.1 Desired Solution

Modify the expenditure data to meet the format and media specified by DMS for their accounting system.

2.12.1.2 Business Impact

Meet the Commonwealth's business needs.

2.12.1.3 Technical Specifications

Once the EMARs planning have been completed the expenditure extracts needs to be modified to meet the new layouts.

2.12.1.4 Clarifications

This CO is a duplicate of the "create check eft file" co 208

2.12.1.5 Associated Requirements

Requirement ID	Type
30.050.009.002.17	Financial Expenditures

2.12.1.6 Associated System Objects

Technical Name	Object Type	Title
finp_pmt	Program	Financial Main Payment Process

2.12.1.7 Change Order Status

Status	Date
Issue Identified	07/06/2005
Change Order Written	10/06/2005
Duplicate	10/31/2005

2.12.2 Provider 1099 Layouts - 202

Identifier	Type	Level	Subsystem	Computed	Estimated	Priority
202	Change Order		Financial			1

2.12.2.1 Desired Solution
Create the provider 1099 extract file in the agreed upon Commonwealth-approved format.

2.12.2.2 Business Impact
Meet the Commonwealth's business needs.

2.12.2.3 Technical Specifications
Once the EMAR layouts are final we will need to modify the existing 1099 file to match the new layouts.

2.12.2.4 Clarifications
No associated clarifications found.

2.12.2.5 Associated Requirements

Requirement ID	Type
30.050.009.002.17	Financial Expenditures
30.090.003.002.32	Financial 1099's
30.090.003.004.4	Financial 1099's
30.090.009.004.1	Financial Payments

2.12.2.6 Associated System Objects

Technical Name	Object Type	Title
finp1550	Program	Provider 1099 Process

2.12.2.7 Change Order Status

Status	Date
Issue Identified	07/06/2005
Change Order Written	10/06/2005
Construction in Progress	06/07/2006
Ready for Model Office	06/14/2006
Model Office Implemented	06/23/2006
UAT Implemented	11/01/2006
Prod Implemented	05/23/2007

2.12.3 Add Totals To Pmt Related TXN - 203

Identifier	Type	Level	Subsystem	Computed	Estimated	Priority
203	Change Order		Financial			1

2.12.3.1 Desired Solution

The financial payment panel needs to display totals at the bottom of the search results. This summary information will give the Commonwealth the ability to see summary information quickly.

2.12.3.2 Business Impact

Meet the Commonwealth's business needs.

2.12.3.3 Technical Specifications

The related transaction panel needs to display the totals at the bottom of the panel.

2.12.3.4 Clarifications

Change Order Estimation was based on Estimation Guidelines--Window/Panel - Modify - Small. Tied to CO 602. Estimation Done by Haydee Olivas.

The only thing pending for the panel is that the Transaction ID will need to be displayed in which case will be done in Core and KY will inherit from Core-
Kentucky defect #2597 has been created to inherit the Core Change. The Core defect was confirmed by James McDaniel.

2.12.3.5 Associated Requirements

Requirement ID	Type
30.090.009.002.27	Financial Online
30.090.009.002.36	Financial Online

2.12.3.6 Associated System Objects

Technical Name	Object Type	Title
FPI Related Claims	Panel	FPI Related Claims

2.12.3.7 Change Order Status

Status	Date
Issue Identified	07/06/2005
Change Order Written	10/06/2005

Status	Date
SE Assigned	05/11/2006
Define/Analyze In Progress	05/11/2006
Construction in Progress	05/17/2006
Ready for Model Office	05/24/2006
Model Office Implemented	07/13/2006
UAT Implemented	11/01/2006
Prod Implemented	05/23/2007

2.12.4 Process To Withhold Cap Payment - 204

Identifier	Type	Level	Subsystem	Computed	Estimated	Priority
204	Change Order		Financial			1

2.12.4.1 Desired Solution

The withholding process needs to be created to allow the Commonwealth to withhold funds from cap payments. The capitation withholding will be based on a percent of their payment and the amount withheld may or may not be returned at some date to the MCO. This change has both online and batch changes.

2.12.4.2 Business Impact

The Commonwealth needs to be able to withhold a percentage of a cap payment.

2.12.4.3 Technical Specifications

Create a batch process to withhold a percentage of a provider's payment and hold it until we determine to release it.

New panels have been added to track the withholdings CO 610.

New tables have been added to track withholdings CO 1213 - the design may be changed to use the existing lien tables.

In the payment process the system needs to see if a withholding has been created for the provider if so then a disposition to the withholding process table needs to be created for the percentage of the payment. This logic should be very similar to the current lien logic.

The withholding process table needs to be rolled into the perm withholding disp table at the end of the cycle.

The RA needs to reflect the withholding in the same manor as the lien withholding.

2.12.4.4 Clarifications

New change orders have been written to create a new process for withholdings the related CO is 610

2.12.4.5 Associated Requirements

Requirement ID	Type
30.050.009.002.14	Financial Capitations
30.090.009.002.28	Financial Capitations

2.12.4.6 Associated System Objects

Technical Name	Object Type	Title
finp_pmt	Program	Financial Main Payment Process

2.12.4.7 Change Order Status

Status	Date
Issue Identified	07/06/2005
Change Order Written	09/07/2005
SE Assigned	05/23/2006
Define/Analyze In Progress	05/23/2006
Construction in Progress	05/23/2006
Ready for Model Office	06/14/2006
Model Office Implemented	08/31/2006
UAT Implemented	11/01/2006
Prod Implemented	05/23/2007

2.12.5 RA Layout Add MTD, AR Scheds - 205

Identifier	Type	Level	Subsystem	Computed	Estimated	Priority
205	Change Order		Financial			1

2.12.5.1 Desired Solution

The RA needs to be modified to display Month to Date totals on the summary page. The financial transaction section will also need to have additional A/R information displayed including the recoupment schedule.

2.12.5.2 Business Impact

Meet the Commonwealth's business needs.

2.12.5.3 Technical Specifications

Add the following fields to the RA summary page:

- Month to date totals; and,
- Add the payment plan schedule to the financial transaction section.

2.12.5.4 Clarifications

Per Darren Swift - This CO as well as CO1134, 1133, and 615 are awaiting other change order completion before I can begin working on them.

2.12.5.5 Associated Requirements

Requirement ID	Type
30.050.009.002.16	Financial Reporting
30.050.009.002.2	Financial RA's
30.090.009.002.3	Financial RA's
30.090.009.003.1	Financial Reporting

2.12.5.6 Associated System Objects

Technical Name	Object Type	Title
CRA-SUMM-R	Report	Remittance Advice Summary
CRA-TRAN-R	Report	Remittance Advice - Financial Transactions

2.12.5.7 Change Order Status

Status	Date
Issue Identified	07/06/2005

Status	Date
Change Order Written	10/06/2005
SE Assigned	05/23/2006
Issue Identified	05/23/2006
SE Assigned	06/08/2006
Construction in Progress	06/08/2006
Ready for Model Office	07/06/2006
Model Office Implemented	07/13/2006
UAT Implemented	11/01/2006
Prod Implemented	05/23/2007

2.12.6 Add Fields To AR Panel - 206

Identifier	Type	Level	Subsystem	Computed	Estimated	Priority
206	Change Order		Financial			1

2.12.6.1 Desired Solution
The AR panels needs to have the 1099 adjustment indicator, transaction source and authorizing individual.

2.12.6.2 Business Impact
Meet the Commonwealth's business needs.

2.12.6.3 Technical Specifications
Add fields, 1099 Indicator, Location, User Id. User Id should be auto plugged.

2.12.6.4 Clarifications
Change Order Estimation was based on Estimation Guidelines--Window/Panel - Modify - Medium. Estimation Done by Haydee Olivas. 1099 Indicator description is still pending.

The CO was added to CO 700

2.12.6.5 Associated Requirements

Requirement ID	Type
30.090.009.002.33	Financial Online
30.090.009.002.36	Financial Online

2.12.6.6 Associated System Objects

Technical Name	Object Type	Title
Fin.AccountRecInformation.ascx - Maintenance	Panel	FARI AR Maintenance
Fin.AccountRecBaseInformationPanel.ascx	Panel	FARI Base Information
Fin.AccountRecInformation.ascx - Information	Panel	FARI AR Information

2.12.6.7 Change Order Status

Status	Date
Issue Identified	07/06/2005
Change Order Written	10/06/2005
Duplicate	10/06/2005

2.12.7 Txns Processed Outside MMIS - 207

Identifier	Type	Level	Subsystem	Computed	Estimated	Priority
207	Change Order		Financial			1

2.12.7.1 Desired Solution
Determine all financial interfaces that are either manual or automatic and define layouts and media. Once the interfaces are determined then create processes to accept and process the data.

2.12.7.2 Business Impact
Meet the Commonwealth's business needs.

2.12.7.3 Technical Specifications
Review the existing list of interfaces and make sure that we are creating each of the requested file. Work with Bill Ponder for the current list.

2.12.7.4 Clarifications
This is a duplicate of "TPL F&A interfaces" CO 614.

2.12.7.5 Associated Requirements

Requirement ID	Type
30.050.009.002.17	Financial Expenditures
30.090.009.002.34	Financial Other Txn's

2.12.7.6 Associated System Objects

Technical Name	Object Type	Title
finp_sched_exp	Program	Financial expenditure extractor
finp_sched_cash	Program	finp_sched_cash
finp_sched_voids	Program	Financial Voids Extractor
finp_sched_ar	Program	Select A/Rs for processing in the financial cycle

2.12.7.7 Change Order Status

Status	Date
Issue Identified	07/06/2005
Change Order Written	10/06/2005
Duplicate	10/31/2005

2.12.8 Create Check/Eft File - 208

Identifier	Type	Level	Subsystem	Computed	Estimated	Priority
208	Change Order		Financial			1

2.12.8.1 Desired Solution
The check and eft file layouts need to meet the Commonwealth's layouts.

2.12.8.2 Business Impact
Meet the Commonwealth's business needs.

2.12.8.3 Technical Specifications
Once the EMAR layouts have been determined we will need to create the extracts file to match.

2.12.8.4 Clarifications
No associated clarifications found.

2.12.8.5 Associated Requirements

Requirement ID	Type
30.050.009.002.17	Financial Expenditures
30.090.009.003.3	Financial Payments
30.090.009.004.1	Financial Payments

2.12.8.6 Associated System Objects

Technical Name	Object Type	Title
FINJW250	Rhonda.Poston@ky.gov	Produce EFT Transmission File & EFT Reports
FINJRPMT	Rhonda.Poston@ky.gov	Payment Generator (Check write)

2.12.8.7 Change Order Status

Status	Date
Change Order Written	10/06/2005
Construction in Progress	05/09/2006
Ready for Model Office	06/19/2006
Model Office Implemented	06/23/2006
Ready for Model Office	07/07/2006
Model Office Implemented	07/13/2006
UAT Implemented	11/01/2006
Prod Implemented	05/23/2007

2.12.9 Add Prov Specialty To Fiscal Pen - 404

Identifier	Type	Level	Subsystem	Computed	Estimated	Priority
404	Change Order		Financial			1

2.12.9.1 Desired Solution
Add the provider specialty or taxonomy to the include exclude logic of the fiscal pend panel.

2.12.9.2 Business Impact
Meet the Commonwealth's business needs.

2.12.9.3 Technical Specifications
Add logic to the payment hold process to include provider specialty. This will include adding the include exclude logic and a new sub panel to allow the selection of the specialty.

2.12.9.4 Clarifications
Change Order Estimation was based on Estimation Guidelines--Window/Panel - Modify - Small. Estimation Done by Haydee Olivas.

2.12.9.5 Associated Requirements

Requirement ID	Type
30.090.009.002.36	Financial Online
30.090.009.002.8	Financial Fiscal Pend

2.12.9.6 Associated System Objects

Technical Name	Object Type	Title
fin_payment_holds	Program	Payment holds
Fin.PaymentHoldInformation.ascx - Maintenance	Panel	FPHI Payment Hold Information
Fin. PaymentHoldPanel.ascx	Panel	FPHI Include-Exclude Indicators

2.12.9.7 Change Order Status

Status	Date
Issue Identified	08/05/2005
Construction in Progress	10/06/2005
UI - Ready for MO Impl (obsolete)	05/22/2006
Model Office Implemented	08/30/2006
UAT Implemented	11/01/2006
Prod Implemented	05/23/2007

2.12.10 Payment Panel Sort And Total - 602

Identifier	Type	Level	Subsystem	Computed	Estimated	Priority
602	Change Order		Financial			1

2.12.10.1 Desired Solution
The payment search results panel needs to display the total number of payments returned from the search criteria and also total the payment amount. The result set should also sort the row by date issue in descending order.

2.12.10.2 Business Impact
the user needs to be able to see total on the payment results panel.

2.12.10.3 Technical Specifications
Modify the results panel to display total number of records and total amount paid.

2.12.10.4 Clarifications
Change Order Estimation was based on Estimation Guidelines--Window/Panel - Modify – Small, tied to CO 203. Estimation Done by Haydee Olivas.

2.12.10.5 Associated Requirements

Requirement ID	Type
30.090.003.002.28	Financial Payments
30.090.009.002.36	Financial Online

2.12.10.6 Associated System Objects

Technical Name	Object Type	Title
Fin.FinPayeeSearchPanel.ascx - Results	Panel	FPS Search Results

2.12.10.7 Change Order Status

Status	Date
Issue Identified	08/24/2005
Change Order Written	09/21/2005
SE Assigned	05/11/2006
Define/Analyze In Progress	05/11/2006
Construction in Progress	05/23/2006
Ready for Model Office	05/25/2006
Model Office Implemented	07/13/2006
UAT Implemented	11/01/2006
Prod Implemented	05/23/2007

2.12.11 Modify AR Disp Panel - 604

Identifier	Type	Level	Subsystem	Computed	Estimated	Priority
604	Change Order		Financial			1

2.12.11.1 Desired Solution
The FARI Disposition Panel needs to display the RA number on the results list. Remove the fund code from the search area. Change the check to CCN.

2.12.11.2 Business Impact
Meet the Commonwealth's business needs.

2.12.11.3 Technical Specifications
Replace the issue date with the RA number, remove the fund code, and replace check with CCN. Reorganized the layout of the panel to match the mockup. Allow the RA and CCN to be links.

2.12.11.4 Clarifications
Change Order Estimation was based on Estimation Guidelines--Window/Panel - Modify - Small. Estimation Done by Haydee Olivas.

This COs Release MO date has been changed to 6/22/06. Adding the RA number does not only apply to this CO but also two additional links in which links to panels that are having issues. SE: Haydee Olivas.

This CO had to be moved to MO not completed because it was holding off some other COs. When it’s completed it will be re released. This was approved by Bob Rhoads. SE: haydee Olivas.

The only thing missing from this CO is the RA links and CCN links which have been moved to CO 3106. Currently the framework does not allow the links for these two fields since they involve nested entities. A CORE SW CO 13345 has been created to meet this need. After it has been completed CO 3106 can be implemented. SE: Haydee Olivas.

2.12.11.5 Associated Requirements

Requirement ID	Type
30.090.009.002.36	Financial Online
30.090.009.002.38	Financial A/R's

2.12.11.6 Associated System Objects

Technical Name	Object Type	Title

Technical Name	Object Type	Title
Fin.ArDispPanel.ascx	Panel	FARI Dispositions

2.12.11.7 Change Order Status

Status	Date
Issue Identified	08/24/2005
Change Order Written	10/06/2005
BE Assigned (obsolete)	04/04/2006
Define/Analyze In Progress	05/09/2006
Construction in Progress	06/15/2006
Ready for Model Office	07/11/2006
Model Office Implemented	09/20/2006
UAT Implemented	11/01/2006
Prod Implemented	05/23/2007

2.12.12 Create AR Letter Tracking - 605

Identifier	Type	Level	Subsystem	Computed	Estimated	Priority
605	Change Order		Financial			1

2.12.12.1 Desired Solution
There is a need to create a process by which AR letters can be tracked and linked to the original AR. This will include both batch and online AR letters. This CO is tied to Core CO 10212.

2.12.12.2 Business Impact
Meet the Commonwealth's business needs.

2.12.12.3 Technical Specifications
The AR panel needs to be able display related letters. Create a link to the OnBase system to allow the user to get to related letters.

2.12.12.4 Clarifications
Change Order Estimation was based on Estimation Guidelines--Window/Panel - Modify - Medium. Estimation Done by Haydee Olivas.

CO 10212 that is tied to this CO status is Construction in Progress. Release Date for MO will have to be changed because of it. SE: Haydee Olivas.

2.12.12.5 Associated Requirements

Requirement ID	Type
30.090.009.002.36	Financial Online
30.090.009.002.40	Financial A/R's

2.12.12.6 Associated System Objects

Technical Name	Object Type	Title
Fin.AccountRecBaseInformationPanel.ascx	Panel	FARI Base Information
Fin.AccountRecInformation.ascx - Information	Panel	FARI AR Information

2.12.12.7 Change Order Status

Status	Date
Issue Identified	08/24/2005
Change Order Written	10/06/2005
SE Assigned	05/23/2006

Status	Date
SE Assigned	08/15/2006
Construction in Progress	08/15/2006
Ready for Model Office	08/15/2006
Model Office Implemented	08/30/2006
UAT Implemented	11/01/2006
Prod Implemented	05/23/2007

2.12.13 AR Aging Date Changes - 608

Identifier	Type	Level	Subsystem	Computed	Estimated	Priority
608	Change Order		Financial			1

2.12.13.1 Desired Solution

The AR panels need to be changed in order to correctly track the age of an AR.

Add a the letter date to the screen and databases - this is the date the provider was notified of the AR.

Add a days old field which will display the number of days old an AR is based on the letter date.

2.12.13.2 Business Impact

The Commonwealth needs to be able to track ARs from the date the provider was first notified of the AR (letter date). They also need to have a process to send letters to the providers letting them know that the ARs are outstanding.

2.12.13.3 Technical Specifications

Add the letter date to the AR information panel.

Add a field named Days Old this will be the number of days from the letter date if the letter date is not present then the date is the number of days past the add date.

2.12.13.4 Clarifications

Change Order Estimation was based on Estimation Guidelines--Window/Panel - Modify - Small. Tied to CO 688. Estimation Done by Haydee Olivas.

2.12.13.5 Associated Requirements

Requirement ID	Type
30.090.007.002.1B	RFP Split Requirement
30.090.009.002.36	Financial Online

2.12.13.6 Associated System Objects

Technical Name	Object Type	Title
Fin.AccountRecInformation.ascx - Information	Panel	FARI AR Information
Fin.AccountRecBaseInformationPanel.ascx	Panel	FARI Base Information

2.12.13.7 Change Order Status

Status	Date
Issue Identified	08/24/2005

Status	Date
Change Order Written	10/06/2005
SE Assigned	07/07/2006
UI - Ready for Const Wthu (obsolete)	07/12/2006
Ready for Model Office	08/17/2006
Model Office Implemented	10/23/2006
UAT Implemented	11/01/2006
Prod Implemented	05/23/2007

2.12.14 AR Aging And Letters For Batch - 609

Identifier	Type	Level	Subsystem	Computed	Estimated	Priority
609	Change Order		Financial			1

2.12.14.1 Desired Solution

The batch system needs to correctly age AR's using the letter date for manual A/R and Add date for system generated A/R's. There also will need to coordination with the TPL group when they create Medicare adjustments to insure the actual letter date is captured.

There needs to be a process added to system to generate late notices to providers. These notices will be created a timed intervals based on the AR age. There will be late notice letters that will be defined and need to be created.

2.12.14.2 Business Impact

The Commonwealth needs to be able to track ARs from the date the provider was first notified of the AR (letter date). They also need to have a process to send letters to the providers letting them know that the ARs are outstanding.

2.12.14.3 Technical Specifications

The system needs to be changed to look at the letter date for aging the current CORE process uses the DTE_ADDED on table T_ACCT_REC. It may be easier to map the letter date to the DTE_ADDED and then add a new date for the date the AR was actually entered into the system. The effective date will be 60 days past the letter date. the letter date will not be populated on system generated recoupments.

Create a process to system generate late letters based on an AR age. This process will trigger letters which will be sent to the provider. This process should run weekly and flag AR's that are X number of days old.

2.12.14.4 Clarifications

No associated clarifications found.

2.12.14.5 Associated Requirements

Requirement ID	Type
30.090.007.002.1B	RFP Split Requirement
30.090.009.002.33	Financial Online
30.090.009.002.47	Financial A/R's

2.12.14.6 Associated System Objects

Technical Name	Object Type	Title
finp_pmt	Program	Financial Main Payment Process

2.12.14.7 Change Order Status

Status	Date
Issue Identified	08/24/2005
Change Order Written	10/06/2005
SE Assigned	04/18/2006
Construction in Progress	04/18/2006
Design Complete	05/12/2006
Unit Test in Progress (obsolete)	05/12/2006
Ready for Model Office	06/07/2006
Model Office Implemented	08/31/2006
UAT Implemented	11/01/2006
Prod Implemented	05/23/2007

2.12.15 Create Process To Withhold Cap - 610

Identifier	Type	Level	Subsystem	Computed	Estimated	Priority
610	Change Order		Financial			1

2.12.15.1 Desired Solution
Create a process to withhold payments from an MCO based on a percentage of their payment. Be able to return the held amount to the MCO at a future date.

2.12.15.2 Business Impact
Meet the Commonwealth's business needs.

2.12.15.3 Technical Specifications
This process may be based on the lien system but needs to more automatic on return the funds to the MCO.

The information panel will be very basic allow the user to add providers and a percentage with a date range.

The disp panel will display all the funds held for a provider. The panel must also have a button that allows the user to release the funds held. When the user clicks the button the system needs to do the following:

1. End date the withholding segment;
2. Change the status to closed;
3. Create an expenditure for the sum of the dispositions (non 1099);
4. Add the expenditure number to the T_LIEN table; and,
5. Add the expenditure payment date to each line on the disp table.

2.12.15.4 Clarifications
Change Order Estimation was based on Estimation Guidelines--Window/Panel - Modify - Large. Estimation Done by Haydee Olivas.

2.12.15.5 Associated Requirements

Requirement ID	Type
30.050.009.002.14	Financial Capitations
30.090.009.002.28	Financial Capitations
30.090.009.002.29	Financial Capitations
30.090.009.002.36	Financial Online

2.12.15.6 Associated System Objects

Technical Name	Object Type	Title
Fin.WithholdingSearch.ascx - Results	Panel	Withholding Results
Fin.EntityMaintenancePanel.ascx - WithholdingComment.cs	Panel	Withholding Comment
WithholdingMiniSearch.ascx	Panel	Withholding Mini-Search
Fin.WithholdingDisposition.ascx	Panel	Withholding Disposition
Fin.WithholdingInfo.ascx - Maintenance	Panel	Withholding Maintenance
Fin.WithholdingInfoBase.ascx	Panel	Withholding Base Information
Fin.WithholdingSearch.ascx - Search	Panel	Withholding Search

2.12.15.7 Change Order Status

Status	Date
Issue Identified	08/24/2005
Change Order Written	10/06/2005
SE Assigned	04/12/2006
SE Assigned	05/20/2006
Construction in Progress	05/20/2006
Ready for Construction Wthru	07/20/2006
Ready for Model Office	07/25/2006
Model Office Implemented	07/28/2006
UAT Implemented	11/01/2006
Prod Implemented	05/23/2007

2.12.16 Reports "CLIENT" to "MEMBER" - 611

Identifier	Type	Level	Subsystem	Computed	Estimated	Priority
611	Change Order		Financial			1

2.12.16.1 Desired Solution
There is a need to change the "CLIENT" text to "MEMBER" for all Financial reports visible to the Commonwealth.

2.12.16.2 Business Impact
Meet the Commonwealth's business needs.

2.12.16.3 Technical Specifications
There is a need to change the "CLIENT" text to "MEMBER" for all Financial reports visible to the Commonwealth.

2.12.16.4 Clarifications
No associated clarifications found.

2.12.16.5 Associated Requirements

Requirement ID	Type
30.050.001M	RFP Split Requirement
30.050.009.002.16	Financial Reporting
30.090.009.003.1	Financial Reporting

2.12.16.6 Associated System Objects

Technical Name	Object Type	Title
FIN-9124-M	Report	Provider Accounts Receivable Notification Letter One
FIN-9123-D	Report	Member Accounts Receivable Notification Letter Two

2.12.16.7 Change Order Status

Status	Date
Issue Identified	08/24/2005
Change Order Written	10/06/2005
SE Assigned	04/04/2006
Design Complete	06/21/2006
Construction in Progress	06/21/2006
Unit Test in Progress (obsolete)	06/21/2006

Status	Date
Ready for Model Office	06/21/2006
Model Office Implemented	08/31/2006
UAT Implemented	11/01/2006
Prod Implemented	05/23/2007

2.12.17 Panels "Recipient" to "Member" - 612

Identifier	Type	Level	Subsystem	Computed	Estimated	Priority
612	Change Order		Financial			1

2.12.17.1 Desired Solution
There is a need to change the text "Recipient" to "member" for all financial panels visible to the Commonwealth.

2.12.17.2 Business Impact
Meet the Commonwealth's business needs.

2.12.17.3 Technical Specifications
There is a need to change the text "Recipient" to "member" for all financial panels visible to the Commonwealth. Only panel that needs the change is the Supplemental Info under Accounts Receivable.

2.12.17.4 Clarifications
Change Order Estimation was based on Estimation Guidelines--Window/Panel - Modify - Medium. Estimation Done by Haydee Olivas.

The only Panels affected of this change were the ExpenditdureSuppDtl.acsx and ArSuppDtl.ascx--SE: Haydee Olivas.

2.12.17.5 Associated Requirements

Requirement ID	Type
30.050.001M	RFP Split Requirement
30.090.009.002.36	Financial Online

2.12.17.6 Associated System Objects

Technical Name	Object Type	Title
Fin.AccountRecBaseInformationPanel.ascx	Panel	FARI Base Information

2.12.17.7 Change Order Status

Status	Date
Issue Identified	08/24/2005
Change Order Written	10/06/2005
SE Assigned	04/04/2006

Status	Date
Define/Analyze In Progress	04/04/2006
Construction in Progress	06/05/2006
Ready for Construction Wthru	06/06/2006
Ready for Model Office	06/15/2006
Model Office Implemented	09/20/2006
UAT Implemented	11/01/2006
Prod Implemented	05/23/2007

2.12.18 Provider Refund Interface - 613

Identifier	Type	Level	Subsystem	Computed	Estimated	Priority
613	Change Order		Financial			1

2.12.18.1 Desired Solution
The provider refund interface needs to be defined and the interfaces need to be created.

2.12.18.2 Business Impact
Meet the Commonwealth's business needs.

2.12.18.3 Technical Specifications
Provider refunds are txn that the KY financial MAR system will not be aware of and we need to notify them. There will also need to be a way to send lien disp amounts since they won't know about them either. Cap withholdings may also need to be added to this extract.

2.12.18.4 Clarifications
No associated clarifications found.

2.12.18.5 Associated Requirements

Requirement ID	Type
30.090.009.004.1	Financial Payments

2.12.18.6 Associated System Objects

Technical Name	Object Type	Title
FINJDSCHAR	Rhonda.Poston@ky.gov	Select Account Receivables for financial cycle
FINJDSCHVOIDS	Rhonda.Poston@ky.gov	Select voids for processing in a financial cycle
FINJDSCHEXP	Rhonda.Poston@ky.gov	Select expenditures for the financial cycle

2.12.18.7 Change Order Status

Status	Date
Issue Identified	08/24/2005
Change Order Written	10/06/2005
SE Assigned	04/11/2006
Define/Analyze In Progress	04/11/2006
Ready for Unit Test (obsolete)	05/23/2006
Unit Test in Progress (obsolete)	06/19/2006
Ready for Model Office	06/21/2006

Status	Date
Model Office Implemented	06/30/2006
UAT Implemented	11/01/2006
Ready for Model Office	11/16/2006
UAT Implemented	12/06/2006
Prod Implemented	05/23/2007

2.12.19 TPL F&A Interfaces - 614

Identifier	Type	Level	Subsystem	Computed	Estimated	Priority
614	Change Order		Financial			1

2.12.19.1 Desired Solution
The layouts of the interfaces for TPL and Fraud and Abuse need to be determined and created.

2.12.19.2 Business Impact
Meet the Commonwealth's business needs.

2.12.19.3 Technical Specifications
Create a generic interface process to read in the files sent by contractors and create AR's and tie them to specific claims using the new AR rollup process.

This CO is tied to the AR rollup all the contractor related reports that need to come out of the interface.

Related reports include the following COs:
- 1114, 1115, 1116, 1117, 1118

2.12.19.4 Clarifications
No associated clarifications found.

2.12.19.5 Associated Requirements

Requirement ID	Type
30.050.009.002.17	Financial Expenditures
30.090.007.004.1A	RFP Split Requirement
30.090.009.002.34	Financial Other Txn's
30.090.009.004.2	Financial A/R's
30.090.012.002.5A	RFP Split Requirement

2.12.19.6 Associated System Objects

Technical Name	Object Type	Title
FINJDSCHVOIDS	Rhonda.Poston@ky.gov	Select voids for processing in a financial cycle
FINJDSCHEXP	Rhonda.Poston@ky.gov	Select expenditures for the financial cycle
FINJDSCHAR	Rhonda.Poston@ky.gov	Select Account Receivables for financial cycle

2.12.19.7 Change Order Status

Status	Date

Status	Date
Issue Identified	08/24/2005
Change Order Written	10/06/2005
Model Office Implemented	06/20/2006
UAT Implemented	11/01/2006
Prod Implemented	05/23/2007

2.12.20 Rejected Claims On The RA - 615

Identifier	Type	Level	Subsystem	Computed	Estimated	Priority
615	Change Order		Financial			1

2.12.20.1 Desired Solution

There is a request to add rejected claims on the providers RA. These are claims that were not able to be processed by the claims engine yet had enough information to identify the provider.

Examples of the RA are included at the bottom of the CO.

2.12.20.2 Business Impact

All RTP RAs that can be sent on the RA should be reported.

2.12.20.3 Technical Specifications

A new table or file will need to be created to pass the RTP ICN, reason code, and provider number. The RA generation pgm will need to be modified to create a new section on the RA.

2.12.20.4 Clarifications

Per Darren Swift - This CO as well as CO1134, 1133, and 205 are awaiting other change order completion before I can begin working on them.

2.12.20.5 Associated Requirements

Requirement ID	Type
30.050.007.002.7A	Financial RA's
30.050.009.002.16	Financial Reporting
30.090.009.002.3	Financial RA's
30.090.009.003.1	Financial Reporting

2.12.20.6 Associated System Objects

Technical Name	Object Type	Title
CRA-RTPM-R	Report	Remittance Advice - Return To Provider
finp_RA	Program	Create checks and remittance advices

2.12.20.7 Change Order Status

Status	Date
Issue Identified	08/24/2005
Change Order Written	10/06/2005

Status	Date
SE Assigned	05/23/2006
Issue Identified	05/23/2006
Construction in Progress	07/13/2006
Ready for Model Office	07/14/2006
Model Office Implemented	08/18/2006
UAT Implemented	11/01/2006
Prod Implemented	05/23/2007

2.12.21 Create Payment Plan Process - 627

Identifier	Type	Level	Subsystem	Computed	Estimated	Priority
627	Change Order		Financial			1

2.12.21.1 Desired Solution
The AR panel needs to be enhanced to allow the user to keep track of the payment plans.

2.12.21.2 Business Impact
Meet the Commonwealth's business needs.

2.12.21.3 Technical Specifications
Display the following on the recoupment payment schedule:
Due date, indicator, principle, interest. Create the panel layout to match the mockup.

2.12.21.4 Clarifications
Change Order Estimation was based on Estimation Guidelines--Window/Panel - Modify - Medium. Estimation Done by Haydee Olivas.

2.12.21.5 Associated Requirements

Requirement ID	Type
30.090.009.002.36	Financial Online
30.090.009.002.37	Financial A/R's

2.12.21.6 Associated System Objects

Technical Name	Object Type	Title
Fin.ArPaymentPlanPanel.ascx	Panel	FARI AR Payment Schedule

2.12.21.7 Change Order Status

Status	Date
Issue Identified	08/26/2005
Change Order Written	10/06/2005
SE Assigned	02/27/2006
Technical Design In Progress (obsolete)	02/27/2006
Construction in Progress	06/01/2006

Status	Date
Ready for Construction Wthru	06/05/2006
Ready for Model Office	06/15/2006
Model Office Implemented	07/13/2006
UAT Implemented	11/01/2006
Prod Implemented	05/23/2007

2.12.22 Modify AR Information - 688

Identifier	Type	Level	Subsystem	Computed	Estimated	Priority
688	Change Order		Financial			1

2.12.22.1 Desired Solution
The AR information page/panel needs to be modified to accommodate specific requirements and needs of the Commonwealth.

2.12.22.2 Business Impact
Meet the Commonwealth's business needs.

2.12.22.3 Technical Specifications
The following fields need to be added to the page/panel:

- Location code;
- Cost Settlement Date;
- Interest calc, and,
- Interest Received.

Change the word current ID to Member. Add logic to plug the effective date equal to 60 days past the letter date. The user should still be able to override the effective date. Add logic for the AR status to include Charge Off this should change the tracking status to charge off. Reorganize the layout of the page/panel to match the mockup.

2.12.22.4 Clarifications
Change Order Estimation was based on Estimation Guidelines--Window/Panel - Modify - small. Tied to CO 608.Estimation Done by Haydee Olivas.

2.12.22.5 Associated Requirements

Requirement ID	Type
30.090.009.002.33	Financial Online
30.090.009.002.36	Financial Online

2.12.22.6 Associated System Objects

Technical Name	Object Type	Title
Fin.AccountRecInformation.ascx - Information	Panel	FARI AR Information

2.12.22.7 Change Order Status

Status	Date
Issue Identified	09/06/2005
Change Order Written	10/06/2005
UI - Ready for Const Wthu (obsolete)	07/13/2006
Ready for Model Office	08/17/2006
UAT Implemented	12/27/2006
Prod Implemented	05/23/2007

2.12.23 Modify The AR Search Page/Panel - 692

Identifier	Type	Level	Subsystem	Computed	Estimated	Priority
692	Change Order		Financial			1

2.12.23.1 Desired Solution
The AR search page/panel needs to be modified to accommodate specific requirements and needs of the Commonwealth.

2.12.23.2 Business Impact
Meet the Commonwealth's business needs.

2.12.23.3 Technical Specifications
Change the effective date to Add Date. Add tracking status and cost settlement date.

2.12.23.4 Clarifications
Change Order Estimation was based on Estimation Guidelines--Window/Panel - Modify - Small. Estimation Done by Haydee Olivas.

2.12.23.5 Associated Requirements

Requirement ID	Type
30.090.009.002.33	Financial Online
30.090.009.002.36	Financial Online

2.12.23.6 Associated System Objects

Technical Name	Object Type	Title
Fin.AccountRecSearchPanel.ascx -Search	Panel	FARS Financial AR Search

2.12.23.7 Change Order Status

Status	Date
Issue Identified	09/06/2005
Change Order Written	10/06/2005
SE Assigned	06/22/2006
UI - Ready for Const Wthu (obsolete)	07/13/2006
Ready for Model Office	08/17/2006
UAT Implemented	12/27/2006
Prod Implemented	05/23/2007

2.12.24 Modify AR Results Panel - 693

Identifier	Type	Level	Subsystem	Computed	Estimated	Priority
693	Change Order		Financial			1

2.12.24.1 Desired Solution
The AR results panel needs to be changed to match the changes on the search panel.

2.12.24.2 Business Impact
Meet the Commonwealth's business needs.

2.12.24.3 Technical Specifications
Add cost settlement date and tracking status.

2.12.24.4 Clarifications
Change Order Estimation was based on Estimation Guidelines--Window/Panel - Modify - Small. Estimation Done by Haydee Olivas.

2.12.24.5 Associated Requirements

Requirement ID	Type
30.090.009.002.33	Financial Online
30.090.009.002.36	Financial Online

2.12.24.6 Associated System Objects

Technical Name	Object Type	Title
Fin.AccountRecSearchPanel.ascx - Results	Panel	FARS Search Results

2.12.24.7 Change Order Status

Status	Date
Issue Identified	09/06/2005
Change Order Written	10/06/2005
UI - Ready for Const Wthu (obsolete)	07/13/2006
Ready for Model Office	08/17/2006
UAT Implemented	12/27/2006
Prod Implemented	05/23/2007

2.12.25 Modify AR Comments Panel - 694

Identifier	Type	Level	Subsystem	Computed	Estimated	Priority
694	Change Order		Financial			1

2.12.25.1 Desired Solution
Modify the AR comments panel to include the date the comment was added and the user ID.

2.12.25.2 Business Impact
Meet the Commonwealth's business needs.

2.12.25.3 Technical Specifications
Add the date the comment was added, this date should auto plug with the current date.

Add user ID, this should be a dropdown choice.

2.12.25.4 Clarifications
Change Order Estimation was based on Estimation Guidelines--Window/Panel - Modify - Small. Tied to CO 1038. Estimation Done by Haydee Olivas.

2.12.25.5 Associated Requirements

Requirement ID	Type
30.090.009.002.33	Financial Online
30.090.009.002.36	Financial Online

2.12.25.6 Associated System Objects

Technical Name	Object Type	Title
Fin. EntityMaintenancePanel.ascx - ArCommentsList.cs	Panel	FARI Comments

2.12.25.7 Change Order Status

Status	Date
Issue Identified	09/06/2005
Change Order Written	10/06/2005
Model Office Implemented	06/20/2006
UAT Implemented	11/01/2006
Prod Implemented	05/23/2007

2.12.26 Modify The AR base Info Panel - 700

Identifier	Type	Level	Subsystem	Computed	Estimated	Priority
700	Change Order		Financial			1

2.12.26.1 Desired Solution
The AR base information panel needs to be modified to match the AR information panel.

2.12.26.2 Business Impact
Meet the Commonwealth's business needs.

2.12.26.3 Technical Specifications
the following changes need to be completed:

- Change current ID to Member ID;
- Add Cost Settle FYE;
- Add tracking Status;
- Add Location Code;
- Add logic to set the effective date 60 days past the letter date;
- Add logic to tie the recoupment type to the tracking status (details to be provided); and,
- Reorganize the layout of the panel to match the mockup.

2.12.26.4 Clarifications
Change Order Estimation was based on Estimation Guidelines--Window/Panel - Modify - Large. Estimation Done by Haydee Olivas.

Removed 1099 IND as this was only for the Expenditure panel. Remove the User-ID as this is displayed on the Audit History panel.

2.12.26.5 Associated Requirements

Requirement ID	Type
30.090.009.002.33	Financial Online
30.090.009.002.36	Financial Online

2.12.26.6 Associated System Objects

Technical Name	Object Type	Title
Fin.AccountRecBaseInformationPanel.ascx	Panel	FARI Base Information

2.12.26.7 Change Order Status

Status	Date
Issue Identified	09/06/2005
Change Order Written	10/06/2005
SE Assigned	05/22/2006
Ready for Model Office	06/26/2006
Model Office Implemented	08/30/2006
UAT Implemented	11/01/2006
Prod Implemented	05/23/2007

2.12.27 Modify The Expenditure Search - 701

Identifier	Type	Level	Subsystem	Computed	Estimated	Priority
701	Change Order		Financial			1

2.12.27.1 Desired Solution
The expenditure search page/panel needs to be modified to support functionality of the requirements specified by the Commonwealth.

2.12.27.2 Business Impact
Meet the Commonwealth's business needs.

2.12.27.3 Technical Specifications
PLEASE LOOK AT CHANGE ORDER CLARIFICATIONS for updated details. This CO will be met with Core 8418.

Make the following changes to the expenditure search page/panel:

- Change current ID to Member Id;
- Add reason code;
- Add Date Paid;
- Add status; and,
- Reorganize the layout of the panel to match the layout.

2.12.27.4 Clarifications
Change Order Estimation was based on Estimation Guidelines--Window/Panel - Modify - Medium. Estimation Done by Haydee Olivas.

The following tasks will be met with Core CO 8418: Add Reason Code and Date Paid. Changing the field current ID to Member ID will no longer be valid due to the new Payee ID/Payee Type processed being implemented. SE: Haydee Olivas.

This change order will be met with Core change order 8418. By completion time the Expenditure Search Panel will include fields, Expenditure ID, Payout Reason, Status, Payee Type, Payee Id, Payee Name, and Payment Date From and Thru. Conversation with Darren Swift on 02/17/06. SE- Haydee Olivas.

2.12.27.5 Associated Requirements

Requirement ID	Type
30.090.009.002.36	Financial Online

Requirement ID	Type
30.090.009.002.44	Financial Expenditures

2.12.27.6 Associated System Objects

Technical Name	Object Type	Title
Fin.ExpenditureSearchPanel.ascx - Search	Panel	FES Financial Expenditure Search

2.12.27.7 Change Order Status

Status	Date
Issue Identified	09/06/2005
Change Order Written	10/06/2005
SE Assigned	01/29/2006
Technical Design In Progress (obsolete)	02/17/2006
Construction in Progress	02/23/2006
Ready for Construction Wthru	04/27/2006
Ready for Model Office	05/22/2006
Model Office Implemented	07/13/2006
UAT Implemented	11/01/2006
Prod Implemented	05/23/2007

2.12.28 Modify Expenditure Results Panel - 702

Identifier	Type	Level	Subsystem	Computed	Estimated	Priority
702	Change Order		Financial			1

2.12.28.1 Desired Solution

The expenditure search results panel needs to be modified to match the search panel.
This is associated with CORE CO 8418.

2.12.28.2 Business Impact

Meet the Commonwealth's business needs.

2.12.28.3 Technical Specifications

The following changes need to be completed:

- Add Date Paid;
- Change Activation Date to Eligible for Payment; and,
- Reorganize the layout of the panel to match the mockup.

2.12.28.4 Clarifications

Change Order Estimation was based on Estimation Guidelines--Window/Panel - Modify - Small. Estimation Done by Haydee Olivas.

By completion this page will include Expenditure Id, Payee Id, Payee Type, Payee name, Payout Reason, Expenditure Amount, Payment Date, Activation Date based on conversation with Darren Swift. SE Haydee Olivas.

This CO was met with Core CO 8418. The only change that had to be done after Core was the order of the Search Results.

2.12.28.5 Associated Requirements

Requirement ID	Type
30.090.009.002.36	Financial Online
30.090.009.002.44	Financial Expenditures

2.12.28.6 Associated System Objects

Technical Name	Object Type	Title
Fin.ExpenditureSearchPanel.ascx - Results	Panel	FES Search Results

2.12.28.7 Change Order Status

Status	Date
Issue Identified	09/06/2005
Change Order Written	10/06/2005
Technical Design In Progress (obsolete)	02/17/2006
Construction in Progress	02/17/2006
Ready for Construction Wthru	04/27/2006
Ready for Model Office	05/22/2006
Model Office Implemented	07/13/2006
UAT Implemented	11/01/2006
Prod Implemented	05/23/2007

2.12.29 Modify Expenditure Info Page/Pan - 703

Identifier	Type	Level	Subsystem	Computed	Estimated	Priority
703	Change Order		Financial			1

2.12.29.1 Desired Solution
The expenditure information page/panel needs to be modified to accommodate specific requirements of the Commonwealth.

2.12.29.2 Business Impact
Meet the Commonwealth's business needs.

2.12.29.3 Technical Specifications
The following items need to be changed on the page/panel:

- Add request doc;
- Only display one COS;
- Delete DOS dates, Rendering Prov;
- Add Cost Settlement FYE; and,
- Add location Code.

Reorganize the layout of the panel to match the mockup.

2.12.29.4 Clarifications
Change Order Estimation was based on Estimation Guidelines--Window/Panel - Modify - Medium. Estimation Done by Haydee Olivas.

The following tasks for this CO will be met by Core CO 8417: Adding Request Doc and deleting DOS dates, Rendering Prov and diplaying COS. SE-Haydee Olivas.

1099 Indicator Currently there is no table to be able to retrieve this field for this panel. This change will be moved to CO 2498 -Haydee Olivas.

Payee Id link change has been moved to KY 2488. Currently the .Net Framework does not have the capability Payee ID link requires, a System Wide CO 12319 has been created to meet this need, after it is done, KY 2488 can be completed.

2.12.29.5 Associated Requirements

Requirement ID	Type
30.090.009.002.36	Financial Online

Requirement ID	Type
30.090.009.002.44	Financial Expenditures

2.12.29.6 Associated System Objects

Technical Name	Object Type	Title
Fin.ExpenditureInformationSummary.ascx - Information	Panel	FEI Expenditure Information

2.12.29.7 Change Order Status

Status	Date
Issue Identified	09/06/2005
Change Order Written	10/06/2005
SE Assigned	01/29/2006
Technical Design In Progress (obsolete)	02/22/2006
Construction in Progress	02/22/2006
Ready for Construction Wthru	05/12/2006
Ready for Model Office	05/22/2006
Model Office Implemented	07/13/2006
UAT Implemented	11/01/2006
Prod Implemented	05/23/2007

2.12.30 Modify Expenditure Base Info - 704

Identifier	Type	Level	Subsystem	Computed	Estimated	Priority
704	Change Order		Financial			1

2.12.30.1 Desired Solution
The base expenditure panel needs to be modified to match the information page/panel.

2.12.30.2 Business Impact
Meet the Commonwealth's business needs.

2.12.30.3 Technical Specifications
The following items need to be changed on the panel:

- Add request doc;
- Only display one COS;
- Delete DOS dates, Rendering Prov;
- Add Cost Settlement FYE;
- Add location Code; and,
- Reorganize the layout of the panel to match the mockup.

2.12.30.4 Clarifications
Change Order Estimation was based on Estimation Guidelines--Window/Panel - Modify - Small. Estimation Done by Haydee Olivas.

Cost Set Year (using T_Expenditure_Supp_Dtl)--is not able to save because the framework does not allow for 2 entities to be saved at the same time. So this cannot be done until the System Wide CO 11630 is finished. The field 1099 Indicator- no table still available for it to be saved to Both of these changes pending will be moved to CO 2497--Haydee Olivas.

2.12.30.5 Associated Requirements

Requirement ID	Type
30.090.009.002.36	Financial Online
30.090.009.002.44	Financial Expenditures

2.12.30.6 Associated System Objects

Technical Name	Object Type	Title
Fin.ExpenditureBasePanel.ascx	Panel	FEI Expenditure Base Information

2.12.30.7 Change Order Status

Status	Date
Issue Identified	09/06/2005
Change Order Written	10/06/2005
SE Assigned	02/22/2006
Technical Design In Progress (obsolete)	02/22/2006
Construction in Progress	02/22/2006
Ready for Construction Wthru	05/04/2006
Ready for Model Office	05/22/2006
Model Office Implemented	07/13/2006
UAT Implemented	11/01/2006
Prod Implemented	05/23/2007

2.12.31 Modify Expenditure Comment Panel - 705

Identifier	Type	Level	Subsystem	Computed	Estimated	Priority
705	Change Order		Financial			1

2.12.31.1 Desired Solution
The expenditure comments panel needs to be modified to display add date and user ID.

2.12.31.2 Business Impact
Meet the Commonwealth's business needs.

2.12.31.3 Technical Specifications
Add the Add Date and user ID on the comments panel. The Add Date should default to the current date.

2.12.31.4 Clarifications
Change Order Estimation was based on Estimation Guidelines--Window/Panel - Modify - Small. Is tied to CO 1038. Estimation Done By Haydee Olivas.

The KY PWB has been updated to reflect the new image, fields and edits as well as the Core PWB. SE: Haydee Olivas.

This CO was met with Core CO 8417 --MO Released Date 5/2/2006--SE: Haydee Olivas.

2.12.31.5 Associated Requirements

Requirement ID	Type
30.090.009.002.36	Financial Online
30.090.009.002.44	Financial Expenditures

2.12.31.6 Associated System Objects

Technical Name	Object Type	Title
Fin.ExpenditureCommentPanel.ascx	Panel	FEI Comments

2.12.31.7 Change Order Status

Status	Date
Issue Identified	09/06/2005
Change Order Written	10/06/2005
SE Assigned	12/08/2005
Technical Design In Progress	12/08/2005

Status	Date
(obsolete)	
Construction in Progress	01/24/2006
Model Office Implemented	05/22/2006
UAT Implemented	11/01/2006
Prod Implemented	05/23/2007

2.12.32 Modify Cash Receipt Info Panel - 1034

Identifier	Type	Level	Subsystem	Computed	Estimated	Priority
1034	Change Order		Financial			1

2.12.32.1 Desired Solution
The cash receipt pages need to be modified to satisfy Commonwealth requirements.

2.12.32.2 Business Impact
Meet the Commonwealth's business needs.

2.12.32.3 Technical Specifications
The following changes need to be made to the cash receipt panel:

- Add Request doc - this should tie to the documentation and copy of the check (add to base panel also);
- Add disp balance (sum of the dispositions);
- Add attorney fee (sum based on reason codes);
- Add receipt balance (current balance of the receipt); and,
- Add unworkable reason dropdown (add to base panel also).

2.12.32.4 Clarifications
Change Order Estimation was based on Estimation Guidelines--Window/Panel - Modify - Large. Estimation Done by Haydee Olivas.

2.12.32.5 Associated Requirements

Requirement ID	Type
30.050.009.002.10	Financial Cash Receipts
30.090.009.002.32	Financial Other Txn's
30.090.009.002.36	Financial Online

2.12.32.6 Associated System Objects

Technical Name	Object Type	Title
Fin.CashReceiptBasePanel.ascx	Panel	FCRI Base Information

2.12.32.7 Change Order Status

Status	Date
Issue Identified	09/07/2005
Change Order Written	10/06/2005
SE Assigned	06/13/2006
Ready for Model Office	06/26/2006
Model Office Implemented	08/30/2006
UAT Implemented	11/01/2006
Prod Implemented	05/23/2007

2.12.33 Modify Cash Disp Panel - 1035

Identifier	Type	Level	Subsystem	Computed	Estimated	Priority
1035	Change Order		Financial			1

2.12.33.1 Desired Solution
The cash receipt disposition panel needs to reflect the changes required by the Commonwealth.

2.12.33.2 Business Impact
Meet the Commonwealth's business needs.

2.12.33.3 Technical Specifications
Add the Related Transaction Date field to the panel this should be the paid date if the txn is a claim and the cost settlement date on other txn if the cost settlement date is blank use the letter date.

2.12.33.4 Clarifications
Change Order Estimation was based on Estimation Guidelines--Window/Panel - Modify - Small. Estimation Done by Haydee Olivas.

2.12.33.5 Associated Requirements

Requirement ID	Type
30.050.006.002.8	RFP Requirement
30.050.009.002.10	Financial Cash Receipts
30.090.009.002.36	Financial Online

2.12.33.6 Associated System Objects

Technical Name	Object Type	Title
Fin.CashDispositionPanel.ascx	Panel	FCRI Disposition

2.12.33.7 Change Order Status

Status	Date
Issue Identified	09/07/2005
Change Order Written	10/06/2005
SE Assigned	06/13/2006
Construction in Progress	06/27/2006
Ready for Model Office	07/05/2006
Model Office Implemented	08/30/2006
UAT Implemented	11/01/2006
Prod Implemented	05/23/2007

2.12.34 Modify Lien Information Panel - 1036

Identifier	Type	Level	Subsystem	Computed	Estimated	Priority
1036	Change Order		Financial			1

2.12.34.1 Desired Solution
The lien information and base information panels need to be modified to meet the requirements of the Commonwealth.

2.12.34.2 Business Impact
Meet the Commonwealth's business needs.

2.12.34.3 Technical Specifications
Change the label Lien Date to Lien Setup Date.

2.12.34.4 Clarifications
Change Order Estimation was based on Estimation Guidelines--Window/Panel - Modify - Small. Estimation Done by Haydee Olivas.

2.12.34.5 Associated Requirements

Requirement ID	Type
30.090.009.002.36	Financial Online

2.12.34.6 Associated System Objects

Technical Name	Object Type	Title
Fin.LienInformation.ascx - Maintenance	Panel	FLI Financial Lien Maintenance
Fin.LienBaseInformationPanel.ascx	Panel	FLI Lien Base Information

2.12.34.7 Change Order Status

Status	Date
Issue Identified	09/07/2005
Change Order Written	10/06/2005
SE Assigned	03/09/2006
Construction in Progress	03/28/2006
UI - Ready for MO Impl (obsolete)	05/22/2006
Model Office Implemented	08/30/2006

Status	Date
UAT Implemented	11/01/2006
Prod Implemented	05/23/2007

2.12.35 Modify Lien Disp Panel - 1037

Identifier	Type	Level	Subsystem	Computed	Estimated	Priority
1037	Change Order		Financial			1

2.12.35.1 Desired Solution
Modify the lien disp panel to meet the expectations of the Commonwealth.

2.12.35.2 Business Impact
Meet the Commonwealth's business needs.

2.12.35.3 Technical Specifications
Add the following items to the lien disp panel:

- Add RA Number;
- Add check number of the lien holder check; and,
- Remove disp date.

2.12.35.4 Clarifications
Change Order Estimation was based on Estimation Guidelines--Window/Panel - Modify - Small. Estimation Done by Haydee Olivas.

2.12.35.5 Associated Requirements

Requirement ID	Type
30.050.007.001	Claims Processing/Adjudication
30.090.009.002.36	Financial Online
30.090.009.002.45	Financial Liens

2.12.35.6 Associated System Objects

Technical Name	Object Type	Title
Fin.LienDispPanel.ascx	Panel	FLI Lien Disposition

2.12.35.7 Change Order Status

Status	Date
Issue Identified	09/07/2005
Change Order Written	10/06/2005
SE Assigned	03/09/2006

Status	Date
Construction in Progress	05/22/2006
Ready for Model Office	06/29/2006
Model Office Implemented	08/30/2006
UAT Implemented	11/01/2006
Prod Implemented	05/23/2007

2.12.36 Add Lien Comment Panel - 1038

Identifier	Type	Level	Subsystem	Computed	Estimated	Priority
1038	Change Order		Financial			1

2.12.36.1 Desired Solution
The lien process needs to have the ability to track comments tied to the lien setups.

2.12.36.2 Business Impact
Meet the Commonwealth's business needs.

2.12.36.3 Technical Specifications
Add a lien comment panel that includes date, user ID and a free form comment section. Date and user ID should be auto populated. This should follow the same layout as all of the financial comment panels. The Lien Maintenance panel will need to have a link to the Comment panel.

2.12.36.4 Clarifications
Change Order Estimation was based on Estimation Guidelines--Window/Panel - Modify - Small. Tied to CO 705,694 and applies to any other comment panel within the financial subsystem. Estimation Done by Haydee Olivas.

2.12.36.5 Associated Requirements

Requirement ID	Type
30.050.007.001	Claims Processing/Adjudication
30.090.009.002.36	Financial Online
30.090.009.002.45	Financial Liens

2.12.36.6 Associated System Objects

Technical Name	Object Type	Title
Fin.LienInformation.ascx - Maintenance	Panel	FLI Financial Lien Maintenance
Fin.EntityMaintenancePanel.ascx - LienComment.cs	Panel	FLI Financial Lien Comment

2.12.36.7 Change Order Status

Status	Date
Issue Identified	09/07/2005
Change Order Written	10/06/2005
SE Assigned	03/09/2006

Status	Date
Construction in Progress	03/28/2006
UI - Ready for MO Impl (obsolete)	05/22/2006
Model Office Implemented	08/30/2006
UAT Implemented	11/01/2006
Prod Implemented	05/23/2007

2.12.37 Modify Payment Search Panel - 1039

Identifier	Type	Level	Subsystem	Computed	Estimated	Priority
1039	Change Order		Financial			1

2.12.37.1 Desired Solution
The payment search criteria needs to be modified to allow the user to search for non-provider payments and also search with the RA number.

2.12.37.2 Business Impact
Meet the Commonwealth's business needs.

2.12.37.3 Technical Specifications
Add the following fields to the payment search panel:

- Add payee ID (type of entity) ;
- Add payment number; and,
- Add RA Number.

2.12.37.4 Clarifications
Change Order Estimation was based on Estimation Guidelines--Small Amount of Panel Modification. Estimation Done by Haydee Olivas.

2.12.37.5 Associated Requirements

Requirement ID	Type
30.090.009.002.36	Financial Online

2.12.37.6 Associated System Objects

Technical Name	Object Type	Title
Fin.FinPayeeSearchPanel.ascx - Search	Panel	FPS Financial Payment Search

2.12.37.7 Change Order Status

Status	Date
Issue Identified	09/07/2005
Change Order Written	10/06/2005
SE Assigned	06/26/2006
Define/Analyze In Progress	06/26/2006

Status	Date
Construction in Progress	07/05/2006
Ready for Model Office	07/06/2006
Model Office Implemented	09/20/2006
UAT Implemented	11/01/2006
Prod Implemented	05/23/2007

2.12.38 Modify Payment Results Panel - 1040

Identifier	Type	Level	Subsystem	Computed	Estimated	Priority
1040	Change Order		Financial			1

2.12.38.1 Desired Solution
The payment results panel needs to be modified to match the search criteria by adding the RA number and cycle date.

2.12.38.2 Business Impact
Meet the Commonwealth's business needs.

2.12.38.3 Technical Specifications
Add Cycle date and RA Number to the results and reorganize the layout to match the mockup.

2.12.38.4 Clarifications
Change Order Estimation was based on Estimation Guidelines--Small Amount of Panel Modification. Estimation Done by Haydee Olivas.

2.12.38.5 Associated Requirements

Requirement ID	Type
30.090.009.002.36	Financial Online

2.12.38.6 Associated System Objects

Technical Name	Object Type	Title
Fin.FinPayeeSearchPanel.ascx - Results	Panel	FPS Search Results

2.12.38.7 Change Order Status

Status	Date
Model Office Implemented	09/07/2005
Change Order Written	10/06/2005
SE Assigned	06/22/2006
Define/Analyze In Progress	06/22/2006
Construction in Progress	07/05/2006
Ready for Model Office	07/06/2006
Model Office Implemented	09/20/2006
UAT Implemented	11/01/2006
Prod Implemented	05/23/2007

2.12.39 Modify Prudent Pay Panel - 1041

Identifier	Type	Level	Subsystem	Computed	Estimated	Priority
1041	Change Order		Financial			1

2.12.39.1 Desired Solution

The Commonwealth needs the ability to enforce prudent pay by provider type and provider number.

2.12.39.2 Business Impact

Meet the Commonwealth's business needs.

2.12.39.3 Technical Specifications

Add the following criteria to the prudent pay panel:

- Add provider type; and,
- Add provider number.

There will need to be batch changes tied to this CO.

To allow maximum flexibility the prudent pay system will be added to the payment hold panel.

2.12.39.4 Clarifications

Change Order Estimation was based on Estimation Guidelines--Medium Amount of Panel Modification. Batch work is being considered in the estimation. Estimation Done by Haydee Olivas.

2.12.39.5 Associated Requirements

Requirement ID	Type
30.090.009.002.36	Financial Online
30.090.009.002.43	Financial Payments

2.12.39.6 Associated System Objects

Technical Name	Object Type	Title
Fin.PrudentPayPanel.ascx	Panel	FRDO Prudent Pay

2.12.39.7 Change Order Status

Status	Date
Issue Identified	09/07/2005
Change Order Written	10/06/2005

Status	Date
UI - Ready for MO Impl (obsolete)	05/22/2006
Model Office Implemented	08/30/2006
UAT Implemented	11/01/2006
Prod Implemented	05/23/2007

2.12.40 Modify Banner Maint Panel - 1042

Identifier	Type	Level	Subsystem	Computed	Estimated	Priority
1042	Change Order		Financial			1

2.12.40.1 Desired Solution
The user needs to be able to see the first 20 - 50 bytes of the banner message in the results area.

2.12.40.2 Business Impact
Meet the Commonwealth's business needs.

2.12.40.3 Technical Specifications
Add the first 30 - 50 bytes of the RA message on the results line.

2.12.40.4 Clarifications
Change Order Estimation was based on Estimation Guidelines--Small Amount of Panel Modification. Estimation Done by Haydee Olivas.

2.12.40.5 Associated Requirements

Requirement ID	Type
30.090.009.002.36	Financial Online
30.090.009.002.5	Financial RA's

2.12.40.6 Associated System Objects

Technical Name	Object Type	Title
Fin.CheckBannerPanel.ascx	Panel	FB Banner Maintenance

2.12.40.7 Change Order Status

Status	Date
Issue Identified	09/07/2005
Change Order Written	10/06/2005
Technical Design In Progress (obsolete)	02/20/2006
UI - Ready for MO Impl (obsolete)	05/22/2006
Model Office Implemented	08/30/2006
UAT Implemented	11/01/2006
Prod Implemented	05/23/2007

2.12.41 Multiple Claims Tied To An AR - 1090

Identifier	Type	Level	Subsystem	Computed	Estimated	Priority
1090	Change Order		Financial			1

2.12.41.1 Desired Solution

The Commonwealth has requested that we have the ability to tie multiple claims to a single AR. This will be used in cases when contractors send AR feeds. These AR's may have hundreds of claims tied to them. These AR also may yet be disputed so we really don't want to adjust the claim until the funds are provided.

2.12.41.2 Business Impact

The Commonwealth uses many outside contractors to identify F&A situations and generate ARs. These ARs need to be entered into the MMIS and each AR may be tied to one to many claims. It is not practical to create a single AR for each claim identified so they need to tie many claims to a single AR.

2.12.41.3 Technical Specifications

Having multiple claims tied to a single AR will require several changes to the AR process the changes includes adding a new table to track claims and amounts, T_FIN_ROLLUP_AR fields include TXN_SAK, CLM_SAK, DTL_NUM, TXN_AMT and this table will link to T_AR_TXN_XREF. When dispositions are done the system needs to build history only adjustments on the claims that are able to be dispositional. For system recoups the system will need to do special processing in the finc_pmt_ar.sc pgm to make sure the proper cash receipts are created to track FFP. Special cash receipts will also need to be created to track the FFP for each disposition. See the dataflow diagram attached to the bottom of the CO for further details.

2.12.41.4 Clarifications

See the attached document for more information on the new process.

2.12.41.5 Associated Requirements

Requirement ID	Type
30.090.009.002.37	Financial A/R's

2.12.41.6 Associated System Objects

Technical Name	Object Type	Title
finp_pmt	Program	Financial Main Payment Process

2.12.41.7 Change Order Status

Status	Date
Issue Identified	09/21/2005

Status	Date
Change Order Written	10/06/2005
SE Assigned	05/01/2006
Define/Analyze In Progress	05/01/2006
Design Complete	05/01/2006
Construction in Progress	05/01/2006
Ready for Model Office	06/07/2006
Model Office Implemented	08/31/2006
UAT Implemented	11/01/2006
Prod Implemented	05/23/2007

2.12.42 Add AR Rollup Panel To The AR pg - 1092

Identifier	Type	Level	Subsystem	Computed	Estimated	Priority
1092	Change Order		Financial			1

2.12.42.1 Desired Solution

The Commonwealth has requested the ability to link multiple claims to a single AR. The current system only maps one claim per AR. A new panel needs to be added to track multiple claims.

2.12.42.2 Business Impact

2.12.42.3 Technical Specifications

Add a new panel tied to the AR page that will show all Claims tied to an AR. The fields should include ICN, Dtl num, and setup amount. There will also need to be a way to enter new rows. The sum of the setup amounts should match the setup amount of the AR. And the sum of the balance should equal the AR balance.

2.12.42.4 Clarifications

Change Order Estimation was based on Estimation Guidelines--Medium Amount of Panel Modification. Estimation Done by Haydee Olivas. This is a panel that will be tied to the primary AR information page and t_acct_rec like all AR's this is just creating a way to tie multiple claims to a single AR.

2.12.42.5 Associated Requirements

Requirement ID	Type
30.090.009.002.36	Financial Online
30.090.009.002.40	Financial A/R's

2.12.42.6 Associated System Objects

Technical Name	Object Type	Title
Fin.RollupArPanel.ascx	Panel	FARI AR Rollup Claims

2.12.42.7 Change Order Status

Status	Date
Issue Identified	09/21/2005
Change Order Written	10/06/2005
SE Assigned	02/22/2006
Construction in Progress	05/22/2006

Status	Date
Ready for Model Office	06/26/2006
Model Office Implemented	08/30/2006
UAT Implemented	11/01/2006
Prod Implemented	05/23/2007

2.12.43 Don't Recoup From Cap Payments - 1093

Identifier	Type	Level	Subsystem	Computed	Estimated	Priority
1093	Change Order		Financial			1

Defect 9106 addressed the issues of Change Order 1093.

2.12.43.1 Desired Solution
Capitation payments need to be excluded from the system recoupment process. KenPAC cycle payments will not look for outstanding ARs.

2.12.43.2 Business Impact
The Commonwealth does not want to recoup funds from the KenPac cycle.

2.12.43.3 Technical Specifications
The AR system recoupment process needs to be turned off if the current cycle is a KenPac cycle.

2.12.43.4 Clarifications
No associated clarifications found.

2.12.43.5 Associated Requirements

Requirement ID	Type
30.090.009.002.37	Financial A/R's

2.12.43.6 Associated System Objects

Technical Name	Object Type	Title
finp_pmt	Program	Financial Main Payment Process

2.12.43.7 Change Order Status

Status	Date
No associated Change Orders found.	

2.12.44 Create T_FIN_ROLLUP_AR Table - 1108

Identifier	Type	Level	Subsystem	Computed	Estimated	Priority
1108	Change Order		Financial			1

2.12.44.1 Desired Solution
The Commonwealth request a way to tie multiple claims to a single AR. A new table needs to be created to maintain the related claims tied to the AR.

2.12.44.2 Business Impact
Meet the Commonwealth's business needs.

2.12.44.3 Technical Specifications
Create a database entity that will contain the following attributes:

- - TXN_SAK - unique ID that ties to the AR;
- - CLM_SAK - sak of the ICN;
- - DTL_NUM - detail number of the claim;
- - TXN_AMT - setup amount of the segment; and,
- - STATUS - the status of the segment.

2.12.44.4 Clarifications
No associated clarifications found.

2.12.44.5 Associated Requirements

Requirement ID	Type
30.090.009.002.37	Financial A/R's

2.12.44.6 Associated System Objects

Technical Name	Object Type	Title
No associated Change Orders found.		

2.12.44.7 Change Order Status

Status	Date
Issue Identified	09/23/2005
Change Order Written	10/06/2005
Ready for Model Office	04/02/2006
Model Office Implemented	04/17/2006
UAT Implemented	11/01/2006
Prod Implemented	05/23/2007

2.12.45 Create FIN-7950-W Report - 1111

Identifier	Type	Level	Subsystem	Computed	Estimated	Priority
1111	Change Order		Financial			1

2.12.45.1 Desired Solution
Create the legacy KYMC7950 r001 stars/Mars weekly refund report.

2.12.45.2 Business Impact
Needed for Kentucky users.

2.12.45.3 Technical Specifications
Duplicate the existing KY report. Check with the notes from the RV workgroup to see how the debit and credit fields are used.

2.12.45.4 Clarifications
While researching this CO, it was determined that we could use the Medicaid Refund extract from CO 613. After researching the eMars layout that will be used for this project, I realized that the new format no longer carried the provider number or Cash Control Number; both fields are on the C7950-R01 report in CO1111. So after discussing this with Darren, we decided it may be best to create this report in the process of creating the extract.

2.12.45.5 Associated Requirements

Requirement ID	Type
30.050.009.002.16	Financial Reporting
30.090.009.003.1	Financial Reporting

2.12.45.6 Associated System Objects

Technical Name	Object Type	Title
FIN-7950-W	Report	STARS MARS Weekly Refund Report

2.12.45.7 Change Order Status

Status	Date
Change Order Written	09/23/2005
SE Assigned	02/15/2006
Issue Identified	02/15/2006
Construction in Progress	05/23/2006
Unit Test in Progress (obsolete)	06/14/2006
Ready for Model Office	06/21/2006
Model Office Implemented	06/30/2006
UAT Implemented	11/01/2006
Prod Implemented	05/23/2007

2.12.46 Create FIN-1099-A Report - 1112

Identifier	Type	Level	Subsystem	Computed	Estimated	Priority
1112	Change Order		Financial			1

2.12.46.1 Desired Solution
Create the legacy KYMC1099-R001 provider annual earnings report.

2.12.46.2 Business Impact
Needed for the Kentucky user. The core system currently creates a 1099 report sorted by tax ID so a new report is added sorted by provider ID.

2.12.46.3 Technical Specifications
Duplicate the existing KY report. This report needs to be sorted by provider number.

2.12.46.4 Clarifications
No associated clarifications found.

2.12.46.5 Associated Requirements

Requirement ID	Type
30.050.009.002.16	Financial Reporting
30.090.009.003.1	Financial Reporting

2.12.46.6 Associated System Objects

Technical Name	Object Type	Title
FIN-1099-A	Report	Provider Annual Earnings Report - Detail Listing by Provider ID

2.12.46.7 Change Order Status

Status	Date
Change Order Written	09/23/2005
SE Assigned	01/15/2006
Construction in Progress	02/02/2006
MO Testing in Progress	07/24/2006
Ready for Model Office	07/25/2006
Model Office Implemented	07/28/2006
UAT Implemented	11/01/2006
Prod Implemented	05/23/2007

2.12.47 Create FIN-1485-D Report - 1113

Identifier	Type	Level	Subsystem	Computed	Estimated	Priority
1113	Change Order		Financial			1

2.12.47.1 Desired Solution
Create the legacy KYMC1485-R002 AR daily adds - status S report.

2.12.47.2 Business Impact
Needed for Kentucky users.

2.12.47.3 Technical Specifications
Duplicate the existing KY report - status of S are ARs created for providers that have been end dated. We will identify these by the use of the tracking status of the AR.

This report should be created by pulling rows off the t_acct_rec table that have a cde_disp_type (tracking status) of Sand an ind_status of A active. The provider tables will need to be joined in to determine the enroll cd, beg date, and end date. The AR amount will be the amt_setup from t_acct_rec and the setup date will be the dte_notified (letter date) or the dte_fed_reported or dte_added in that order depending on which is present. The AR loc cd will come from the location code on t_acct_rec.

2.12.47.4 Clarifications
No associated clarifications found.

2.12.47.5 Associated Requirements

Requirement ID	Type
30.050.009.002.16	Financial Reporting
30.090.009.003.1	Financial Reporting

2.12.47.6 Associated System Objects

Technical Name	Object Type	Title
FIN-1485-D	Report	AR Daily Adds - Status S

2.12.47.7 Change Order Status

Status	Date
Change Order Written	09/23/2005
SE Assigned	01/24/2006
Construction in Progress	02/10/2006
Ready for Model Office	03/10/2006
Model Office Implemented	07/21/2006
UAT Implemented	11/01/2006
Prod Implemented	05/23/2007

2.12.48 Create Contractor AR Gener Rpts - 1114

Identifier	Type	Level	Subsystem	Computed	Estimated	Priority
1114	Change Order		Financial			1

2.12.48.1 Desired Solution

Create the legacy KYMC1700-R001, KYMC1800-R001, KYMC18xx-R001 contractor electronic transfer AR generated reports.

2.12.48.2 Business Impact

Needed for the Kentucky user to track contractor AR sent to the MMIS.

2.12.48.3 Technical Specifications

Create the FIN-1701, FIN1801, and FIN18xx1 reports from using the current KY reports. Each of these reports will be the same with the exception of the report number. The numbers need to be different so the can tell which contractor sent the information. The process should be part of a generic interface process that generates this report. The AR input program will be created by CO 614 this process will read in a file from an outside contractor or an internal group and the system will build ARs. This process should create an extract that will be used to create this report. The extract file should also identify the source of the file which contractor or internal group sent the file. This report should wait on CO614.

2.12.48.4 Clarifications

I talked with Darren about naming standards for the reports and since all of these reports will be driven by a two character Reason Code, we decided to embed that into the reports for the whole series.

This report will be FIN-17xx1-R.

2.12.48.5 Associated Requirements

Requirement ID	Type
30.050.009.002.16	Financial Reporting
30.090.007.004.1A	RFP Split Requirement
30.090.009.002.34	Financial Other Txn's
30.090.009.003.1	Financial Reporting
30.090.012.002.5A	RFP Split Requirement

2.12.48.6 Associated System Objects

Technical Name	Object Type	Title
FIN-17XX1-R	Report	Contractor Electronic Transfer - AR Generated

2.12.48.7 Change Order Status

Status	Date
Change Order Written	09/23/2005
SE Assigned	03/21/2006
Unit Test in Progress (obsolete)	03/21/2006
Ready for Construction Wthru	03/30/2006
Ready for Model Office	03/30/2006
Model Office Implemented	06/18/2006
UAT Implemented	11/01/2006
Prod Implemented	05/23/2007

2.12.49 Create Contractor AR Error Rpts - 1115

Identifier	Type	Level	Subsystem	Computed	Estimated	Priority
1115	Change Order		Financial			1

2.12.49.1 Desired Solution

Create the legacy KYMC1700-R002, KYMC1700- R003, KYMC1800-R002, KYMC18xx-R002 contractor electronic Transfer - TCN in ERROR reports

2.12.49.2 Business Impact

Needed for the Kentucky user to track contractor AR's.

2.12.49.3 Technical Specifications

Create FIN-18xx report to report contractor TCN errors. This report will be generic for all contractor inputs a common process will read in a file and then the error report will be generated the only difference between the reports will be the report number which will be different for each contractor. The AR input program will be created by CO 614 this process will read in a file from an outside contractor or an internal group and the system will build ARs. This process should create an extract that will be used to create this report. The extract file should also identify the source of the file which contractor or internal group sent the file. This report should wait on CO614.

2.12.49.4 Clarifications

I talked with Darren about naming standards for the reports and since all of these reports will be driven by a two character Reason Code, we decided to embed that into the reports for the whole series. This report will be FIN-17xx2-R.

2.12.49.5 Associated Requirements

Requirement ID	Type
30.050.009.002.16	Financial Reporting
30.090.007.004.1A	RFP Split Requirement
30.090.009.002.34	Financial Other Txn's
30.090.009.003.1	Financial Reporting
30.090.012.002.5A	RFP Split Requirement

2.12.49.6 Associated System Objects

Technical Name	Object Type	Title
FIN-17XX2-R	Report	Contractor Electronic Transfer - TCN Errors

2.12.49.7 Change Order Status

Status	Date
Change Order Written	09/23/2005
SE Assigned	03/21/2006
Unit Test in Progress (obsolete)	03/21/2006
Ready for Construction Wthru	03/31/2006
Ready for Model Office	03/31/2006
Model Office Implemented	06/18/2006
UAT Implemented	11/01/2006
Prod Implemented	05/23/2007

2.12.50 Create Contractor AR On Hold - 1116

Identifier	Type	Level	Subsystem	Computed	Estimated	Priority
1116	Change Order		Financial			1

2.12.50.1 Desired Solution
Create the legacy KYMC1700-R003 contractor electronic Transfers- AR on hold.

2.12.50.2 Business Impact
Needed for the Kentucky user to track contractor AR sent to the MMIS.

2.12.50.3 Technical Specifications
Create the FIN1700 R003 report using the current KY reports. The report will show all txn where the provider ID was not found on our tables.

The AR input program will be created by CO 614 this process will read in a file from an outside contractor or an internal group and the system will build ARs. This process should create an extract that will be used to create this report. The extract file should also identify the source of the file which contractor or internal group sent the file. This report should wait on CO614.

2.12.50.4 Clarifications
I talked with Darren about naming standards for the reports and since all of these reports will be driven by a two character Reason Code, we decided to embed that into the reports for the whole series. This report will be FIN-17xx3-R.

2.12.50.5 Associated Requirements

Requirement ID	Type
30.050.009.002.16	Financial Reporting
30.090.007.004.1A	RFP Split Requirement
30.090.009.002.34	Financial Other Txn's
30.090.009.003.1	Financial Reporting
30.090.012.002.5A	RFP Split Requirement

2.12.50.6 Associated System Objects

Technical Name	Object Type	Title
FIN-17XX3-R	Report	Contractor Electronic Transfer - AR ON HOLD

2.12.50.7 Change Order Status

Status	Date
Change Order Written	09/23/2005
SE Assigned	03/21/2006
Unit Test in Progress (obsolete)	03/21/2006

Status	Date
Ready for Construction Wthru	03/31/2006
Ready for Model Office	03/31/2006
Model Office Implemented	06/18/2006
UAT Implemented	11/01/2006
Prod Implemented	05/23/2007

2.12.51 Create Contractor No Prov Rpts - 1117

Identifier	Type	Level	Subsystem	Computed	Estimated	Priority
1117	Change Order		Financial			1

2.12.51.1 Desired Solution
Create the legacy KYMC1700-R004, KYMC1800-R004 and KYMC18xx-R004 contractor electronic transfer - Provider not on file reports.

2.12.51.2 Business Impact
Needed for the Kentucky user to track contractor AR sent to the MMIS.

2.12.51.3 Technical Specifications
Create the FIN-18xx4 report using the KY reports as an example. Each of these reports will be the same with the exception of the report number. The numbers need to be different so the can tell which contractor sent the information. The process should be part of a generic interface process that generates this report.

The AR input program will be created by CO 614 this process will read in a file from an outside contractor or an internal group and the system will build ARs. This process should create an extract that will be used to create this report. The report will need to be passed the provider number and the end date of the provider's eligibility the report program will need to get the provider name. the input file should also send the AR amount and the letter date (setup date). The extract file should also identify the source of the file which contractor or internal group sent the file. This report should wait on CO614.

2.12.51.4 Clarifications
I talked with Darren about naming standards for the reports and since all of these reports will be driven by a two character Reason Code, we decided to embed that into the reports for the whole series. This report will be FIN-17xx4-R.

2.12.51.5 Associated Requirements

Requirement ID	Type
30.050.009.002.16	Financial Reporting
30.090.007.004.1A	RFP Split Requirement
30.090.009.002.34	Financial Other Txn's
30.090.009.003.1	Financial Reporting
30.090.012.002.5A	RFP Split Requirement

2.12.51.6 Associated System Objects

Technical Name	Object Type	Title
FIN-17XX4-R	Report	Contractor Electronic Transfer - Provider Not On File

2.12.51.7 Change Order Status

Status	Date
Change Order Written	09/23/2005
SE Assigned	03/21/2006
Unit Test in Progress (obsolete)	03/21/2006
Ready for Construction Wthru	03/31/2006
Ready for Model Office	03/31/2006
Model Office Implemented	06/18/2006
UAT Implemented	11/01/2006
Prod Implemented	05/23/2007

2.12.52 Create Contractor AR Status S Rpts - 1118

Identifier	Type	Level	Subsystem	Computed	Estimated	Priority
1118	Change Order		Financial			1

2.12.52.1 Desired Solution

Create the legacy KYMC1700-R005, KYMC170A-R005 contractor electronic transfer - Status S reports.

2.12.52.2 Business Impact

Needed for the Kentucky user to track contractor AR sent to the MMIS.

2.12.52.3 Technical Specifications

Create the FIN-18xx5 report using the KY reports as an example. Each of these reports will be the same with the exception of the report number. The numbers need to be different so the can tell which contractor sent the information. The process should be part of a generic interface process that generates this report. The AR input program will be created by CO 614 this process will read in a file from an outside contractor or an internal group and the system will build ARs. This process should create an extract that will be used to create this report. The report will need to be passed the provider number and the end date of the provider's eligibility the report program will need to get the provider name. the input file should also send the AR amount and the letter date (setup date). The extract file should also identify the source of the file which contractor or internal group sent the file. This report should wait on CO614.

2.12.52.4 Clarifications

I talked with Darren about naming standards for the reports and since all of these reports will be driven by a two character Reason Code, we decided to embed that into the reports for the whole series. This report will be FIN-17xx5-R.

2.12.52.5 Associated Requirements

Requirement ID	Type
30.050.009.002.16	Financial Reporting
30.090.007.004.1A	RFP Split Requirement
30.090.009.002.34	Financial Other Txn's
30.090.009.003.1	Financial Reporting
30.090.012.002.5A	RFP Split Requirement

2.12.52.6 Associated System Objects

Technical Name	Object Type	Title
FIN-17XX5-R	Report	Contractor Electronic Transfer - Status 'S'

2.12.52.7 Change Order Status

Status	Date
Change Order Written	09/23/2005
SE Assigned	03/21/2006
Unit Test in Progress (obsolete)	03/21/2006
Ready for Construction Wthru	03/31/2006
Ready for Model Office	03/31/2006
Model Office Implemented	06/18/2006
UAT Implemented	11/01/2006
Prod Implemented	05/23/2007

2.12.53 Create FIN-1750-W On Hold >45 - 1119

Identifier	Type	Level	Subsystem	Computed	Estimated	Priority
1119	Change Order		Financial			1

2.12.53.1 Desired Solution
Create the Legacy KYMC1750-R001 Contractor On Hold > 45 Days report.

2.12.53.2 Business Impact
Needed for the Kentucky user to track contractor AR sent to the MMIS.

2.12.53.3 Technical Specifications
Use the KY legacy report as a base to create the FIN-1750-W report. This report will only show AR in an on hold status for contractors - this status should be found by checking the tracking status. The days old will be based on the letter date (dte_notified). The sql will need to look at the cde_disp_reason for codes of 'C' hold recoup -- other. There may be a limited amount of reason codes to look at to make sure we only report contractor ARs. The AR age is determined by subtracting the dte_notified from the system date. Provider - these will all be provider ARs AR trans - sak_acct_rec from t_acct_rec, orig amt - amt_setup - t_acct_rec, Unpaid balance - amt_setup minus the sum of disps (looking at the debt_ind) from t_ar_disp. Date of letter - dte_notified from t_acct_rec (new field) # details - sum of rows from the t_fin_rollup_ar table (new table) Comment - first row from the t_ar_comments table dsc_long (first 30 bytes).

2.12.53.4 Clarifications
No associated clarifications found.

2.12.53.5 Associated Requirements

Requirement ID	Type
30.050.009.002.16	Financial Reporting
30.090.009.002.34	Financial Other Txn's
30.090.009.003.1	Financial Reporting

2.12.53.6 Associated System Objects

Technical Name	Object Type	Title
FIN-1750-W	Report	Contractor On Hold Over 45 Days

2.12.53.7 Change Order Status

Status	Date
Change Order Written	09/23/2005
SE Assigned	01/26/2006

Status	Date
Construction in Progress	02/10/2006
Ready for Model Office	03/10/2006
Model Office Implemented	07/21/2006
UAT Implemented	11/01/2006
Prod Implemented	05/23/2007

2.12.54 Modify FIN-5000-Q Report - 1120

Identifier	Type	Level	Subsystem	Computed	Estimated	Priority
1120	Change Order		Financial			1

2.12.54.1 Desired Solution
Remove the Manual check amount and add a short provider name next to the provider ID.

2.12.54.2 Business Impact
The current Ky reports show the provider name.

2.12.54.3 Technical Specifications
Remove the Manual check Amount and use the space to add in the provider name (as much as will fit) place the name next to the pr ID.

2.12.54.4 Clarifications
No associated clarifications found.

2.12.54.5 Associated Requirements

Requirement ID	Type
30.050.009.002.16	Financial Reporting
30.090.009.003.1	Financial Reporting

2.12.54.6 Associated System Objects

Technical Name	Object Type	Title
FIN-1099-B	Report	1099 Tax ID Payment Summary

2.12.54.7 Change Order Status

Status	Date
Change Order Written	09/23/2005
SE Assigned	01/26/2006
Construction in Progress	02/10/2006
Ready for Model Office	07/11/2006
Model Office Implemented	07/14/2006
UAT Implemented	11/01/2006
Prod Implemented	05/23/2007

2.12.55 Create FIN-6602-D On Demand Ck - 1123

Identifier	Type	Level	Subsystem	Computed	Estimated	Priority
1123	Change Order		Financial			1

2.12.55.1 Desired Solution
Create the Legacy KYMC6600-R002 On Demand Provider Check Report.

2.12.55.2 Business Impact
The user to track On Demand payments is needed for Kentucky. These are special issue checks that are set up to pay in the first available cycle.

2.12.55.3 Technical Specifications
Use the KY legacy report as a base to create the FIN-6602-D report. This report will only show expenditures with a process type of "Immediate Process".

The core fin-1620-d report list all the manual checks entered into the system during the day, this report should work well as a base for the new on demand check report. In KY they will not use the manual check function however they do create what they call on demand which is checks that are generated in the system but in a separate financial cycle than the normal claims payment. These txn will show up on the expenditure table and will have a 'D' in the cde_process_type.

This report will need to run after the payment cycle so that the check number will be available.

2.12.55.4 Clarifications
No associated clarifications found.

2.12.55.5 Associated Requirements

Requirement ID	Type
30.050.009.002.16	Financial Reporting
30.090.009.003.1	Financial Reporting

2.12.55.6 Associated System Objects

Technical Name	Object Type	Title
FIN-6602-D	Report	On Demand Provider Check Report

2.12.55.7 Change Order Status

Status	Date
Change Order Written	09/26/2005
Resource Assigned for Construction (obsolete)	11/10/2005

Status	Date
Technical Design In Progress (obsolete)	11/11/2005
SE Assigned	01/26/2006
Construction in Progress	02/10/2006
Ready for Model Office	03/10/2006
Model Office Implemented	07/07/2006
UAT Implemented	11/01/2006
Prod Implemented	05/23/2007

2.12.56 Modify FIN-3000-W AR Activity Rp - 1124

Identifier	Type	Level	Subsystem	Computed	Estimated	Priority
1124	Change Order		Financial			1

2.12.56.1 Desired Solution

Modify the FIN-3000-w report to allow it to be used to map to the following legacy KY reports:

- KYMC6600-R003 – Daily; and,
- KYMC8050-R001 – Weekly.

The CORE report will need to have fields added to match the KY functions. And a new daily report will be needed for the 6602 report.

2.12.56.2 Business Impact

The user to track ARs is needed for Kentucky.

2.12.56.3 Technical Specifications

Modify the core Fin-3000-w report to match the data items found on the KY reports. Add a new daily version of the report. The PWB has these reports laid out as FIN-6603-D and FIN-8051-W we may want to change the names to match Core and make one Daily and one Weekly. This report will only report providers.
Rec - not used; TRN Type - not used these will all be AR's; Reason Cod - cde_reason_four - t_acct-rec; Date - letter date(dte_notified), setup date or ffp date which ever is present - t_acct-rec; Age (days) - calculated by the system date minus the date field above - t_acct_rec; Cost sett FYE - new field dte_fed_reported - t_acct_rec; Amt Requested - amt_setup - t_acct_rec; AR inc(dec) - sum of increase decrease AR adjustments - t_ar_disp based on reason codes excludes interest; Amount recd/recoup - sum of recoupments - t_ar_disp based on reason codes excludes interest; Unpaid balance - sum of disp (based on the debt_ind) - t_ar_disp excludes interest; ST CD - ind_status - t_acct_rec; PP_ind - set to Y if a row exists on t_ar_payment_plan table; Payout amount - not used this is only ARs; Interest Balance - sum of interest disp (based on the debt_ind and reason codes) t_ar_disp; Net balance - AR original amount minus the sum of disp (based on the debt_ind including interest) t_acct_rec and t_ar_disp; Provider number and name - based on provider information; AR TCN - sak_acct_rec - t_acc_rec; Loc cd - new field location_cde t_acct_rec; AR Xref - not used ARs not linked in the new system; Comments - first row of the t_ar_comments desc_long (only show first 30 bytes). The same information will be used on both the daily and weekly reports.

2.12.56.4 Clarifications

No associated clarifications found.

2.12.56.5 Associated Requirements

Requirement ID	Type
30.050.009.002.16	Financial Reporting
30.090.009.003.1	Financial Reporting

2.12.56.6 Associated System Objects

Technical Name	Object Type	Title
FIN-8051-W	Report	Provider Accounts Receivable Summary
FIN-3000-D	Report	Provider Accounts Receivable Daily Activity

2.12.56.7 Change Order Status

Status	Date
Change Order Written	09/26/2005
SE Assigned	01/26/2006
Construction in Progress	03/10/2006
Ready for Model Office	06/29/2006
Model Office Implemented	07/07/2006
Ready for Model Office	07/14/2006
Model Office Implemented	07/21/2006
UAT Implemented	11/01/2006
Prod Implemented	05/23/2007

2.12.57 Modify The FIN-9120-D AR Letter - 1125

Identifier	Type	Level	Subsystem	Computed	Estimated	Priority
1125	Change Order		Financial			1

2.12.57.1 Desired Solution

Change the existing CORE report FIN-9120-D letter to meet the wording of the existing KYMC6600-R004 letter.

2.12.57.2 Business Impact

The user to be able to notify providers of new ARs created is needed for Kentucky.

2.12.57.3 Technical Specifications

The wording of the letter needs to be changed to meet the Commonwealth's needs. This report will be generated from the AR panel, or by using the rpt/ltr panel.

2.12.57.4 Clarifications

This CO had been cancelled by mistake. We are currently working defect 6389 for this letter.

2.12.57.5 Associated Requirements

Requirement ID	Type
30.050.009.002.16	Financial Reporting
30.090.009.003.1	Financial Reporting

2.12.57.6 Associated System Objects

Technical Name	Object Type	Title
FIN-9120-R	Report	Provider Accounts Receivable Notification Letter
FIN-6604A-D	Report	Provider Accounts Receivable Overpayment Letter

2.12.57.7 Change Order Status

Status	Date
Change Order Written	09/26/2005
SE Assigned	01/26/2006
Construction in Progress	03/10/2006
UAT Implemented	07/07/2006
Prod Implemented	05/23/2007

2.12.58 Create FIN-6604B-D letter - 1126

Identifier	Type	Level	Subsystem	Computed	Estimated	Priority
1126	Change Order		Financial			1

2.12.58.1 Desired Solution
Create a new letter accessed from the RPT/LTR panel that will be used to accompany an expenditure check.

2.12.58.2 Business Impact
The user to inform the provider of a payment they will receive is needed for Kentucky.

2.12.58.3 Technical Specifications
Create a new letter which will be triggered by the rpt/Ltr panel. The letter will be mapped after the KY existing KYMC6600-R004B. The letter will need to be passed the expenditure number (shown on the existing letter as A/R TCN), the amount of the payout, the check number, and the reason for the payout.

2.12.58.4 Clarifications
No associated clarifications found.

2.12.58.5 Associated Requirements

Requirement ID	Type
30.090.009.002.36	Financial Online
30.090.009.003.1	Financial Reporting

2.12.58.6 Associated System Objects

Technical Name	Object Type	Title
FIN-6604B-D	Report	Provider Accounts Receivable Refund Letter

2.12.58.7 Change Order Status

Status	Date
Change Order Written	09/26/2005
Ready for Model Office	08/23/2006
UAT Implemented	12/27/2006
Prod Implemented	05/23/2007

2.12.59 FIN-6625-W CREATE - 1127

Identifier	Type	Level	Subsystem	Computed	Estimated	Priority
1127	Change Order		Financial			1

2.12.59.1 Desired Solution
Create the Legacy KYMC6625-R001 Weekly Receivable Active Payment Plan report.

2.12.59.2 Business Impact
Needed for the Kentucky user to track ARs with payment plans.

2.12.59.3 Technical Specifications
Create the FIN-6625-W report using the KY report as an example.

The report will be driven by joining the T_ACCT_REC, T_AR_DISP and T_AR_PAYMENT_PLAN tables. The report needs to list all the active ARs that have a payment plan tied to them.

Provider Number = calculated from the payee ID, payee type;
Setup Date = letter date from T_ACCT_REC;
Stat Code = T_ACCT_REC.CDE_DISP_REASON;
Adj = T_ACCT_REC.CDE_REASON_FOUR;
Original Amt Req = T_ACCT_REC.AMT_SETUP;
Interest Calculated = sum of T_AR_DISP.AMT where T_AR_DISP.CDE_REASON_FOUR = T_AR_DISP_REAS.CDE_REASON_FOUR and T_AR_DISP_REAS.CDE_REASON_TYPE = 'I' and T_AR_DISP.AMT > 0;
Interest Balance = sum of T_AR_DISP.AMT where T_AR_DISP.CDE_REASON_FOUR = T_AR_DISP_REAS.CDE_REASON_FOUR and T_AR_DISP_REAS.CDE_REASON_TYPE = 'I'
Net Balance = T_ACCT_REC.AMT_SETUP - (sum of T_AR_DISP_AMT;
Late Pmt Ind = 'Y' if there is a row on T_AR_PAYMENT_PLAN in an active status (IND_PMT = 'O' or 'L') and a due date before the system date;
NOTE: If a late payment is found and IND_PMT = 'O', then the table must be updated so that IND_PMT = 'L';
Next Pmt Due Date = newest DUE_DATE where status is active (IND_PMT = 'O') on the T_AR_PAYMENT_PLAN table for the AR;
Next Pmt Amt Due = sum of the principle and interest of the next payment plus any outstanding segments on T_AR_PAYMENT_PLAN (IND_PMT = 'L'); and,
Payment Rem = sum of active segments (IND_PMT = 'O') from the T_AR_PAYMENT_PLAN table.

2.12.59.4 Clarifications
No associated clarifications found.

2.12.59.5 Associated Requirements

Requirement ID	Type
30.050.009.002.16	Financial Reporting
30.090.009.002.37	Financial A/R's

Requirement ID	Type
30.090.009.003.1	Financial Reporting

2.12.59.6 Associated System Objects

Technical Name	Object Type	Title
FIN-6625-W	Report	Weekly Receivable Active Payment Plan Report

2.12.59.7 Change Order Status

Status	Date
Change Order Written	09/26/2005
SE Assigned	01/26/2006
Construction in Progress	02/10/2006
Ready for Model Office	03/10/2006
Model Office Implemented	07/07/2006
Ready for Model Office	07/14/2006
Model Office Implemented	07/21/2006
UAT Implemented	11/01/2006
Prod Implemented	05/23/2007

2.12.60 Create FIN-6900-W Claim Split Sum - 1129

Identifier	Type	Level	Subsystem	Computed	Estimated	Priority
1129	Change Order		Financial			1

2.12.60.1 Desired Solution
Create the Legacy KYMC6900-R001 Weekly financial Claim Split Summary report.

2.12.60.2 Business Impact
Needed for the Kentucky user to track purdent pay claims.

2.12.60.3 Technical Specifications
Use the KY legacy report as a base to create the FIN-6900-W report. This report will track the number of claims held by prudent pay and other hold criteria. The history only section may be used to track history only adjustments. This report may need to pull the data from the DSS system. The Retained on Adjudicated claims will be the count of claims that were brought into financial but were held either by prudent pay or payment holds. These numbers should come out of the payment hold process or the budget process which won't be used in KY. The released to Financial Process will be the count of claims that made it to the payment process. This data should be created out of the pmt job or the RA job. The Released to financial history will be counts of history only adjustments - there needs to be more research on how these claims will be identified.

2.12.60.4 Clarifications
No associated clarifications found.

2.12.60.5 Associated Requirements

Requirement ID	Type
30.050.009.002.16	Financial Reporting
30.090.007.003.13A	Financial Reporting
30.090.009.002.43	Financial Payments
30.090.009.003.1	Financial Reporting
30.090.012.002.9A	RFP Split Requirement

2.12.60.6 Associated System Objects

Technical Name	Object Type	Title
FIN-6900-W	Report	Weekly Financial Claims Split Summary

2.12.60.7 |Change Order Status

Status	Date
Change Order Written	09/26/2005
SE Assigned	01/26/2006
Ready for Model Office	06/29/2006
Model Office Implemented	07/07/2006
UAT Implemented	11/01/2006
Prod Implemented	05/23/2007

2.12.61 Create Pre Payment Sum Repots - 1130

Identifier	Type	Level	Subsystem	Computed	Estimated	Priority
1130	Change Order		Financial			1

2.12.61.1 Desired Solution
Create the Legacy KYMC7000-R001, KYMC700K-R001, KYMC700L-R001 and Preliminary Payment Summary Reports. These reports are the same layout and data only they run at different times.

2.12.61.2 Business Impact
Needed for the Kentucky user to track payments for each cycle and tie them back to the adjudication cycle.

2.12.61.3 Technical Specifications
Create the FIN-7000-W, FIN-700K-W and FIN-700L-W reports. These reports will need to break based on adjudication date. The listings will be by claim type along with a few other items. Remove the line for claim credits since we don't use them. There will need to be three report names one for the normal payment cycle, one for KenPac and one for Lockin.

2.12.61.4 Clarifications
No associated clarifications found.

2.12.61.5 Associated Requirements

Requirement ID	Type
30.050.009.002.16	Financial Reporting
30.090.007.003.15	Financial Reporting
30.090.009.003.1	Financial Reporting
30.090.012.002.9A	RFP Split Requirement

2.12.61.6 Associated System Objects

Technical Name	Object Type	Title
FIN-700K-W	Report	KenPac Preliminary Payment Summary
FIN-700L-W	Report	Lockin Preliminary Payment Summary
FIN-700-W	Report	Preliminary Payment Summary

2.12.61.7 Change Order Status

Status	Date
Change Order Written	09/26/2005

Status	Date
SE Assigned	01/26/2006
Ready for Model Office	07/05/2006
Model Office Implemented	07/07/2006
UAT Implemented	11/01/2006
Prod Implemented	05/23/2007

2.12.62 Create Final Payment Sum Reports - 1131

Identifier	Type	Level	Subsystem	Computed	Estimated	Priority
1131	Change Order		Financial			1

2.12.62.1 Desired Solution
Create the Legacy KYMC7500-R001, KYMC7500K-R001, KYMC7500L-R001 Final Payment Summary reports.

2.12.62.2 Business Impact
Needed for the Kentucky user to track final payments during the month.

2.12.62.3 Technical Specifications
Use the KY legacy reports to create the FIN-7501-W, FIN-7501K-M, and FIN-7501L-M reports. These reports will be the same only there needs to be three separate report names one for regular, KenPAC, and lockin. Each report will need to have a summary report with the MTD totals. Remove the claim credit amounts.

These reports may work best out of the DSS system.

This report will take some research to make sure we only report the things that are needed.

2.12.62.4 Clarifications
No associated clarifications found.

2.12.62.5 Associated Requirements

Requirement ID	Type
30.050.009.002.16	Financial Reporting
30.090.007.003.15	Financial Reporting
30.090.009.003.1	Financial Reporting
30.090.012.002.9A	RFP Split Requirement

2.12.62.6 Associated System Objects

Technical Name	Object Type	Title
FIN-750K1-M	Report	KenPAC Final Payment Summary
FIN-7501-W	Report	Final Payment Summary
FIN-750L1-M	Report	Lockin Final Payment Summary

2.12.62.7 Change Order Status

Status	Date

Status	Date
Change Order Written	09/26/2005
Construction in Progress	06/29/2006
Ready for Model Office	08/14/2006
Model Office Implemented	08/30/2006
UAT Implemented	11/01/2006
Prod Implemented	05/23/2007

2.12.63 Modify Check Registry Reports - 1132

Identifier	Type	Level	Subsystem	Computed	Estimated	Priority
1132	Change Order		Financial			1

2.12.63.1 Desired Solution
Modify the existing Core Check Registry report to match the 9 legacy Check Registry reports. The legacy reports are KYMC7500-R002, KYMC7500K-R002, KYMC7500L-R002, KYMC7500-R003, KYMC750K-R003, KYMC750L-R003, KYMC7500-R004, KYMC7500-R005, and KYMC7550-R001.

2.12.63.2 Business Impact
Needed for the Kentucky user to track checks and payment amounts.

2.12.63.3 Technical Specifications
Modify the existing FIN-1601-W report to now create 9 separate reports (same only the name will be different) one for regular payments, one for non providers, one for KenPac cycle and one for Lockin cycle. Add the Payee number, check number, RA number. Remove the Mailing address. The new report names will be FIN-7502-w, FIN-7502K-M, FIN-7502L-M, FIN7503-W, FIN7503K-M, FIN7503L-W, FIN7504-W (change check num to eft trace), FIN7505-W and FIN7550-W. New jobs and reports will need to be added for these.

2.12.63.4 Clarifications
No associated clarifications found.

2.12.63.5 Associated Requirements

Requirement ID	Type
30.050.009.002.16	Financial Reporting
30.090.009.003.1	Financial Reporting

2.12.63.6 Associated System Objects

Technical Name	Object Type	Title
FIN-7503-W	Report	Inter account Providers and Managed Care Partnerships Check Register
FIN-7504-W	Report	EFT Check Register
FIN-750L3-M	Report	Lockin Check Register (Inter accounts)
FIN-7550-W	Report	Non-Provider Check Report
FIN-750K2-M	Report	KenPAC Check Register
FIN-750L2-M	Report	Lockin Check Register
FIN-7502-W	Report	Check Register
FIN-7505-W	Report	Impact Plus MHMR and DCBS Inter Accounts
FIN-750K3-M	Report	KenPAC Check Register (Inter accounts)

2.12.63.7 Change Order Status

Status	Date
Change Order Written	09/26/2005
SE Assigned	05/08/2006
Define/Analyze In Progress	05/10/2006
Technical Design In Progress (obsolete)	05/12/2006
Ready for Tech Walkthrough	05/15/2006
Construction in Progress	05/16/2006
Technical Design In Progress (obsolete)	05/26/2006
Unit Test in Progress (obsolete)	05/30/2006
Ready for Construction Wthru	05/30/2006
Ready for Model Office	06/02/2006
Model Office Implemented	12/12/2006
UAT Implemented	05/23/2007
Prod Implemented	05/23/2007

2.12.64 Add Mass Adj sec to the Prov RA - 1133

Identifier	Type	Level	Subsystem	Computed	Estimated	Priority
1133	Change Order		Financial			1

2.12.64.1 Desired Solution
Modify the RA to include a Mass Adjustment section for each claim types. This will look like the normal adjustment section only it will contain the adjustments as a result of a Mass adjustment.

2.12.64.2 Business Impact
The current KY RA has a mass adjustment section.

2.12.64.3 Technical Specifications
Duplicate the adjustment sections of the current RA and split the txns for Mass adjustments to report in the new section. The mass adjustments will have a different region than the normal claim adjustments. The summary page will also need to be modified to show the split totals. This change may be made in core.

2.12.64.4 Clarifications
This CO as well as CO1134, 205, and 615 are awaiting other change order completion before I can begin working on them.

2.12.64.5 Associated Requirements

Requirement ID	Type
30.050.009.002.16	Financial Reporting
30.090.009.002.3	Financial RA's
30.090.009.003.1	Financial Reporting

2.12.64.6 Associated System Objects

Technical Name	Object Type	Title
CRA-DNAM-R	Report	Remittance Advice - Dental Claim Mass Adjustments
CRA-IPAM-R	Report	Remittance Advice - Inpatient Claim Mass Adjustments
CRA-XAAM-R	Report	Remittance Advice - Medicare Crossover Part A Claim Mass Adjustments
CRA-PRAM-R	Report	Remittance Advice - CMS 1500 Claim Mass Adjustments
CRA-XBAM-R	Report	Remittance Advice - Medicare Crossover Part B Claim Mass Adjustments
CRA-OPAM-R	Report	Remittance Advice - Outpatient Claim Mass Adjustments
CRA-LTMA-R	Report	Remittance Advice - Long Term Care Claim Mass Adjustments
CRA-HHAM-R	Report	Remittance Advice - Home Health Claim Mass Adjustments

2.12.64.7 Change Order Status

Status	Date
Change Order Written	09/26/2005
SE Assigned	05/23/2006
Issue Identified	05/23/2006
Construction in Progress	07/19/2006
Unit Test in Progress (obsolete)	07/27/2006
Ready for Model Office	07/28/2006
Model Office Implemented	08/31/2006
UAT Implemented	11/01/2006
Prod Implemented	05/23/2007

2.12.65 Duplicate RA for KenPAC Lockin - 1134

Identifier	Type	Level	Subsystem	Computed	Estimated	Priority
1134	Change Order		Financial			1

2.12.65.1 Desired Solution

The system needs to create separate RAs for the normal cycle, KenPac and Lockin. The RA is the same only the name of the report is different.

2.12.65.2 Business Impact

The Commonwealth needs to be able to identify the RA's from each of its cycles.

2.12.65.3 Technical Specifications

For each payment cycle (Regular, KenPac, Lockin) there needs to be an RA created with a unique name. the layout will be the same for each cycle.

2.12.65.4 Clarifications

Per Darren Swift - This CO as well as CO1133, 205, and 615 are awaiting other change order completion before I can begin working on them.

2.12.65.5 Associated Requirements

Requirement ID	Type
30.050.009.002.16	Financial Reporting
30.090.009.002.3	Financial RA's
30.090.009.003.1	Financial Reporting

2.12.65.6 Associated System Objects

Technical Name	Object Type	Title
No associated Change Orders found.		

2.12.65.7 Change Order Status

Status	Date
Change Order Written	09/26/2005
SE Assigned	05/23/2006
Issue Identified	05/23/2006
SE Assigned	07/13/2006
Design Complete	07/13/2006
Construction in Progress	07/13/2006

Status	Date
Unit Test in Progress (obsolete)	07/13/2006
Ready for Model Office	07/19/2006
Model Office Implemented	08/31/2006
UAT Implemented	11/01/2006
Prod Implemented	05/23/2007

2.12.66 Create FIN-8011-W Warrant Trns - 1140

Identifier	Type	Level	Subsystem	Computed	Estimated	Priority
1140	Change Order		Financial			1

2.12.66.1 Desired Solution
Create the legacy KYMC8001-R001 Warrant Tape Transmittal report.

2.12.66.2 Business Impact
Needed for the Kentucky user to attach to the warrant file.

2.12.66.3 Technical Specifications
Create the FIN-8011-W report using the KY report as an example. This report shows as a letter This letter needs to be created each cycle were a payment file is created and set to the Commonwealth accounting system. The report will serve as a cover letter. There will need to be procedure manual changes to insure that this letter accompanies the tape.

2.12.66.4 Clarifications
No associated clarifications found.

2.12.66.5 Associated Requirements

Requirement ID	Type
30.050.009.002.16	Financial Reporting
30.090.009.003.1	Financial Reporting

2.12.66.6 Associated System Objects

Technical Name	Object Type	Title
FIN-8011-W	Report	Warrant Tape Transmittal

2.12.66.7 Change Order Status

Status	Date
Change Order Written	09/26/2005
SE Assigned	01/11/2006
Define/Analyze In Progress	01/30/2006
Technical Design In Progress (obsolete)	01/31/2006
Ready for Construction Wthru	05/22/2006
Ready for Model Office	05/26/2006

Status	Date
Model Office Implemented	06/16/2006
Ready for Model Office	07/11/2006
Model Office Implemented	07/14/2006
UAT Implemented	11/01/2006
Prod Implemented	05/23/2007

2.12.67 Modify FIN-2055-W - 1143

Identifier	Type	Level	Subsystem	Computed	Estimated	Priority
1143	Change Order		Financial			1

2.12.67.1 Desired Solution
Modify the FIN-2055-W report to match the legacy payout report KYMC8050-R002.

2.12.67.2 Business Impact
Needed for the Kentucky user to track payouts.

2.12.67.3 Technical Specifications
Modify the core FIN-2055-W report to match the data items found on the KY report add the following fields:

- RA number;
- Paid Date;
- Location Code; and,
- Cost Settlement Date.

Remove Beni information.

THIS REPORT WILL REPLACE THE LEGACY MYMV8050-R002.

2.12.67.4 Clarifications
No associated clarifications found.

2.12.67.5 Associated Requirements

Requirement ID	Type
30.010.010	RFP Requirement
30.050.009.002.16	Financial Reporting
30.090.009.003.1	Financial Reporting

2.12.67.6 Associated System Objects

Technical Name	Object Type	Title
FIN-2055-W	Report	Financial Transactions Input - Payouts by Reason Code
FINJW320	Rhonda.Poston@ky.gov	Create Payout (Expenditure) Report
FIN-2050-W	Report	Financial Transactions Input - Payouts
finp1080	Program	Creates payout (expenditure) reports

2.12.67.7 Change Order Status

Status	Date
Change Order Written	09/27/2005
SE Assigned	01/16/2006
Define/Analyze In Progress	02/01/2006
Technical Design In Progress (obsolete)	02/02/2006
Ready for Tech Walkthrough	02/09/2006
Construction in Progress	02/10/2006
Ready for Produce Phase Wthru (obsolete)	02/14/2006
Ready for Model Office	02/15/2006
Model Office Implemented	05/28/2006
UAT Implemented	11/01/2006
Prod Implemented	05/23/2007

2.12.68 Modify FIN-3001-W AR Aging - 1144

Identifier	Type	Level	Subsystem	Computed	Estimated	Priority
1144	Change Order		Financial			1

2.12.68.1 Desired Solution
Modify the existing Core AR Aging report FIN-3001-W to sort by provider number. Also create a new report FIN-8053-W to report Charge off status ARs.

2.12.68.2 Business Impact
Needed for the Kentucky user to track AR aging.

2.12.68.3 Technical Specifications
Modify the FIN-3001-W report to sort by provider number, and use the Commonwealths ageing 0-30 31-60 61-90 over 90. this report will only display active status ARs. A new report FIN-8053-W will be created to show only status Charge off. The report will have the same layout and sort. Add location code, and letter date. The charge off will be a new AR status (Open - O, Closed -C, Charge Off - X). TCN should be renamed to AR Number. The report should use the aging break logic that is on the 3001 report rather than the way the legacy report displays the number of days.

2.12.68.4 Clarifications
No associated clarifications found.

2.12.68.5 Associated Requirements

Requirement ID	Type
30.010.010	RFP Requirement
30.050.009.002.16	Financial Reporting
30.090.009.002.46	Financial Reporting
30.090.009.003.1	Financial Reporting

2.12.68.6 Associated System Objects

Technical Name	Object Type	Title
FIN-8053-W	Report	Provider Accounts Receivable Aging (Charge Off)
finp3001	Program	AR aging by Fund Code report
FINJW370	Rhonda.Poston@ky.gov	Produces aging AR's by fund code report
FIN-3001-W	Report	Provider Accounts Receivable - Aging by Fund Code

2.12.68.7 Change Order Status

Status	Date

Status	Date
Change Order Written	09/27/2005
SE Assigned	02/03/2006
Define/Analyze In Progress	02/06/2006
Technical Design In Progress (obsolete)	02/16/2006
Ready for Tech Walkthrough	02/17/2006
Construction in Progress	02/18/2006
Ready for Construction Wthru	02/22/2006
Ready for Model Office	05/25/2006
Model Office Implemented	05/28/2006
UAT Implemented	11/01/2006
Prod Implemented	05/23/2007

2.12.69 Create FIN-8061-W Expd Aging - 1145

Identifier	Type	Level	Subsystem	Computed	Estimated	Priority
1145	Change Order		Financial			1

2.12.69.1 Desired Solution
Create the legacy KYMC80600-R001 payout aging report.

2.12.69.2 Business Impact
Needed for the Kentucky user to track payout aging.

2.12.69.3 Technical Specifications
Create the FIN-8061-W providers Payout Aging Report using the FIN-3001-W core report as an example. The twist will be that it will report payouts rather than ARs. The time ranges need to be as follows 0-7 8-14 15-21 22-30 over 30 days. This report will use the t_expenditure table. Use the break logic found in the 3001 report rather than the way the legacy report showed the number of days old. The original amount and the balance should always be the same AMT_PAID.

2.12.69.4 Clarifications
No associated clarifications found.

2.12.69.5 Associated Requirements

Requirement ID	Type
30.050.009.002.16	Financial Reporting
30.090.009.003.1	Financial Reporting

2.12.69.6 Associated System Objects

Technical Name	Object Type	Title
FIN-8061-W	Report	Provider Accounts Payable Aging Report

2.12.69.7 Change Order Status

Status	Date
Change Order Written	09/27/2005
SE Assigned	05/04/2006
Unit Test in Progress (obsolete)	05/04/2006
Ready for Model Office	05/23/2006
Model Office Implemented	08/30/2006
UAT Implemented	11/01/2006
Prod Implemented	05/23/2007

2.12.70 Create FIN-8062-W - 1146

Identifier	Type	Level	Subsystem	Computed	Estimated	Priority
1146	Change Order		Financial			1

2.12.70.1 Desired Solution
Create the Legacy KYMC8060-R002 Provider AR on hold for Status Code B, C, J, U, W-Z report.

2.12.70.2 Business Impact
Needed for the Kentucky user to track ARs that are on hold.

2.12.70.3 Technical Specifications
Create the FIN-8062-W report using the KY report as an example. The report will look at the tracking status (CDE_DISP_REASON) on the AR table. The report also breaks on the provider type, there will need to be a new field added to identify the provider type. In the legacy system the first two bytes of the provider ID is the provider type. The report needs to break on the reason codes within the provider type and give a total at the bottom only by status.

The codes translate to:

- B - hold recoup payment plan;
- C - Hold recoup other;
- J - Hold recoup refund;
- U - Unisys on hold (needs to change to EDS);
- W - further review;
- X – Bankruptcy;
- Y – Appeal; and,
- Z - Resolution hearing.

These codes will be carried on the t_ar_status table and should keep the same values and description.

The setup date should be the letter date, and the amt req should be the original amount or setup amount, the balance will be calculated using the AR disp table. And the xref TCN will not be needed since we don't link ARs to other ARs. The AR TCN should be renamed to AR Number. The report name needs to be changed to something more descriptive.

2.12.70.4 Clarifications
No associated clarifications found.

2.12.70.5 Associated Requirements

Requirement ID	Type
30.050.009.002.16	Financial Reporting
30.090.009.003.1	Financial Reporting

2.12.70.6 Associated System Objects

Technical Name	Object Type	Title
FIN-8062-W	Report	Provider AR On Hold for Status Code B C J U W-Z

2.12.70.7 Change Order Status

Status	Date
Change Order Written	09/27/2005
SE Assigned	05/04/2006
Unit Test in Progress (obsolete)	05/04/2006
Ready for Model Office	05/23/2006
Model Office Implemented	06/02/2006
Ready for Model Office	06/20/2006
Model Office Implemented	06/26/2006
UAT Implemented	11/01/2006
Prod Implemented	05/23/2007

2.12.71 Create FIN-8065-W 270 Past Due - 1147

Identifier	Type	Level	Subsystem	Computed	Estimated	Priority
1147	Change Order		Financial			1

2.12.71.1 Desired Solution
Create the legacy KYMC8065-R001 Weekly AR outstanding balances over 270 days report.

2.12.71.2 Business Impact
Needed for the Kentucky user to track ARs that are over 270 days old.

2.12.71.3 Technical Specifications
Create the FIN-8065-W report using the KY report as an example. The report will only report an AR once based on the letter date or add date if not letter date is present. The logic should check for 270 - 277 days old. The sql will need to look at the t_acct_rec table for all active ARs that are 270-277 days old based on letter date, or setup date, or FFP report date which ever is present in that order. The current balance will need to be calculated by looking at the disp table and the payment plan indicator will be determined by checking for rows on the new payment plan table. This report should only report Providers.

2.12.71.4 Clarifications
No associated clarifications found.

2.12.71.5 Associated Requirements

Requirement ID	Type
30.050.009.002.16	Financial Reporting
30.090.009.003.1	Financial Reporting

2.12.71.6 Associated System Objects

Technical Name	Object Type	Title
FIN-8065-W	Report	Weekly AR Outstanding Balances Over 270 Days

2.12.71.7 Change Order Status

Status	Date
Change Order Written	09/27/2005
SE Assigned	05/04/2006
Unit Test in Progress (obsolete)	05/04/2006
Unit Test in Progress (obsolete)	05/04/2006
Ready for Model Office	05/23/2006

Status	Date
Model Office Implemented	06/02/2006
Ready for Model Office	07/14/2006
Model Office Implemented	07/21/2006
UAT Implemented	11/01/2006
Prod Implemented	05/23/2007

2.12.72 Create FIN-807E-M Recovery MS - 1148

Identifier	Type	Level	Subsystem	Computed	Estimated	Priority
1148	Change Order		Financial			1

2.12.72.1 Desired Solution
Create the Legacy KYMC807E-R001 Monthly Recovery status -Reason code MS report.

2.12.72.2 Business Impact
Needed for the Kentucky user to track recoveries for outside contractors.

2.12.72.3 Technical Specifications
Create the FIN807E-M report using the KY report as an example. Look at the actual production report for the totals at the bottom of the report. Look at the legacy logic to determine if an AR is paid in full in previous month we do not need to report in the future months. On the columns checks is cash receipts and recoups are system recoupments.

2.12.72.4 Clarifications
No associated clarifications found.

2.12.72.5 Associated Requirements

Requirement ID	Type
30.050.009.002.16	Financial Reporting
30.090.007.004.1A	RFP Split Requirement
30.090.009.002.34	Financial Other Txn's
30.090.009.003.1	Financial Reporting

2.12.72.6 Associated System Objects

Technical Name	Object Type	Title
FIN-807E1-M	Report	Fraud and Abuse Contractor C - Monthly Recovered Status - Reason Code MS

2.12.72.7 Change Order Status

Status	Date
Change Order Written	09/27/2005
SE Assigned	05/04/2006
Unit Test in Progress (obsolete)	05/04/2006
Ready for Model Office	05/23/2006

Status	Date
Model Office Implemented	06/02/2006
UAT Implemented	11/01/2006
Prod Implemented	05/23/2007

2.12.73 Create FIN-807E-M Non Lockbox - 1149

Identifier	Type	Level	Subsystem	Computed	Estimated	Priority
1149	Change Order		Financial			1

2.12.73.1 Desired Solution
Create the Legacy KYMC807E-R002 Total Recovered for the month Non-Lock Box Meyers and Stauffer report.

2.12.73.2 Business Impact
Needed for the Kentucky user to track recoveries for outside contractors.

2.12.73.3 Technical Specifications
Create the FIN807E-M report using the KY report as an example. Look at the actual production report for the totals at the bottom of the report. This report needs to balance with the R001 legacy report. The total recovered amount needs to match the monthly checks posted - checks received from the lockbox.

2.12.73.4 Clarifications
No associated clarifications found.

2.12.73.5 Associated Requirements

Requirement ID	Type
30.050.009.002.16	Financial Reporting
30.090.007.004.1A	RFP Split Requirement
30.090.009.002.34	Financial Other Txn's
30.090.009.003.1	Financial Reporting

2.12.73.6 Associated System Objects

Technical Name	Object Type	Title
FIN-807E2-M	Report	Total Recovered For The Month Non - Lock Box Myers and Stauffer Checks

2.12.73.7 Change Order Status

Status	Date
Change Order Written	09/27/2005
SE Assigned	05/04/2006
Unit Test in Progress (obsolete)	05/04/2006
Ready for Model Office	05/23/2006

Status	Date
Model Office Implemented	06/02/2006
Ready for Model Office	06/20/2006
Model Office Implemented	06/26/2006
UAT Implemented	11/01/2006
Prod Implemented	05/23/2007

2.12.74 Create FIN-807I AR Payouts MS - 1150

Identifier	Type	Level	Subsystem	Computed	Estimated	Priority
1150	Change Order		Financial			1

2.12.74.1 Desired Solution
Create the Legacy KYMC807I-R001Monthly report Unisys generated payout for Meyers and Stauffer.

2.12.74.2 Business Impact
Needed for the Kentucky user to track recoveries for outside contractors.

2.12.74.3 Technical Specifications
Create the FIN807E-M report using the KY report as an example. Need to determine how to tie the AR and expenditure together. These are when the original AR was recouped in error.

2.12.74.4 Clarifications
There is currently no way to link Payouts to A/Rs. Darren is looking into the supplemental detail.

2.12.74.5 Associated Requirements

Requirement ID	Type
30.050.009.002.16	Financial Reporting
30.090.007.004.1A	RFP Split Requirement
30.090.009.002.34	Financial Other Txn's
30.090.009.003.1	Financial Reporting

2.12.74.6 Associated System Objects

Technical Name	Object Type	Title
FIN-807I-M	Report	Monthly Generated Payout For Myers and Stauffer

2.12.74.7 Change Order Status

Status	Date
Change Order Written	09/27/2005
SE Assigned	05/04/2006
Unit Test in Progress (obsolete)	05/04/2006
Ready for Model Office	05/23/2006
Model Office Implemented	06/02/2006
UAT Implemented	11/01/2006
Prod Implemented	05/23/2007

2.12.75 Create Cont Recoup Status By Rsn - 1152

Identifier	Type	Level	Subsystem	Computed	Estimated	Priority
1152	Change Order		Financial			1

2.12.75.1 Desired Solution
Create the legacy KYMC8071-R001, KYMC8076-R001, KYMC8077-R001, KYMC8082-R001, KYMC8083 monthly recoupment status - reason code reports.

2.12.75.2 Business Impact
Needed for the Kentucky user to track recoveries for outside contractors.

2.12.75.3 Technical Specifications
Create the FIN-8071-M, FIN-8076-M, FIN-8077-M, FIN-8082-M, FIN-8083 report using the KY report as an example. This report like a few of the others with the same layout need to have a table or a stub file that contains date segments for the periods of the contracts. These date ranges are used for the page breaks of the report. The date ranges are identified by the CYCLE # on the report. The following reports have the same layout but will use a different set of date periods. We may be able to track the dates on the same table or file for each of these reports. A data model changed will be needed to add the table to store the date ranges.

- FIN-8071-M;
- FIN-8076-M;
- FIN-8077-M (member);
- FIN-8082-M; and,
- FIN-8083-M (ED's recovery, only one date range needed).

2.12.75.4 Clarifications
No associated clarifications found.

2.12.75.5 Associated Requirements

Requirement ID	Type
30.050.009.002.16	Financial Reporting
30.090.007.004.1A	RFP Split Requirement
30.090.009.002.34	Financial Other Txn's
30.090.009.003.1	Financial Reporting

2.12.75.6 Associated System Objects

Technical Name	Object Type	Title
FIN-8077-M	Report	AR Member Fraud Collections (CODE 77)
FIN-8071-M	Report	Monthly Recoupment Status - Reason Code 46 and CB
FIN-8076-M	Report	Monthly Recoupment Status - Reason Code 49 and AA
FIN-8082-M	Report	Monthly Recoupment Status - Reason Code BB

2.12.75.7 Change Order Status

Status	Date
Change Order Written	09/28/2005
SE Assigned	03/29/2006
Define/Analyze In Progress	03/31/2006
Construction in Progress	05/02/2006
Ready for Construction Wthru	05/02/2006
Ready for Model Office	05/12/2006
Model Office Implemented	05/26/2006
UAT Implemented	11/01/2006
Prod Implemented	05/23/2007

2.12.76 Create FIN-8072-M Recoup Payout - 1153

Identifier	Type	Level	Subsystem	Computed	Estimated	Priority
1153	Change Order		Financial			1

2.12.76.1 Desired Solution
Create the Legacy KYMC8072-R002 contractor Recoupment Payouts for PCG.

2.12.76.2 Business Impact
Needed for the Kentucky user to track recoveries for outside contractors.

2.12.76.3 Technical Specifications
Create the FIN-8072-M report using the KY report as an example. For the comment field pull the from the oldest comment segment from the expenditure comments. This should be the setup comment.

2.12.76.4 Clarifications
No associated clarifications found.

2.12.76.5 Associated Requirements

Requirement ID	Type
30.050.009.002.16	Financial Reporting
30.090.009.002.34	Financial Other Txn's
30.090.009.003.1	Financial Reporting

2.12.76.6 Associated System Objects

Technical Name	Object Type	Title
FIN-8072-M	Report	Contractor Recoupment Payouts For PCG

2.12.76.7 Change Order Status

Status	Date
Change Order Written	09/28/2005
SE Assigned	02/24/2006
Technical Design In Progress (obsolete)	02/24/2006
Construction in Progress	03/10/2006
Ready for Construction Wthru	03/24/2006
Ready for Model Office	03/29/2006
Model Office Implemented	05/26/2006
UAT Implemented	11/01/2006
Prod Implemented	05/23/2007

2.12.77 Create FIN-8080-M Collections Rp - 1155

Identifier	Type	Level	Subsystem	Computed	Estimated	Priority
1155	Change Order		Financial			1

2.12.77.1 Desired Solution
Create the Legacy KYMC8080-R001 Monthly program Integrity Monthly Collections Report.

2.12.77.2 Business Impact
Needed for the Kentucky user to track recoveries for outside contractors.

2.12.77.3 Technical Specifications
Create the FIN-8080-M report using the KY report as an example. Need to review an actual production report to make sure we are using the current format. This report pulls data from other contractor and TPL reports and puts the data on a single report. There are Monthly, Quarterly, and Yearly totals. The current system uses stub files created in the other report programs to feed this report.

2.12.77.4 Clarifications
Need to clarify provider and member interest for TPL.

2.12.77.5 Associated Requirements

Requirement ID	Type
30.050.009.002.16	Financial Reporting
30.090.009.002.34	Financial Other Txn's
30.090.009.003.1	Financial Reporting
30.090.012.002.9A	RFP Split Requirement

2.12.77.6 Associated System Objects

Technical Name	Object Type	Title
FIN-8080-M	Report	Monthly Program Integrity Collections Report

2.12.77.7 Change Order Status

Status	Date
Change Order Written	09/28/2005
Construction in Progress	06/14/2006
Ready for Model Office	07/10/2006
Model Office Implemented	07/14/2006
UAT Implemented	11/01/2006
Prod Implemented	05/23/2007

2.12.78 Create FIN-8084-M DRG Review - 1157

Identifier	Type	Level	Subsystem	Computed	Estimated	Priority
1157	Change Order		Financial			1

2.12.78.1 Desired Solution
Create the Legacy KYMC8084-R001 Monthly recovered Status - Reason Code DG report.

2.12.78.2 Business Impact
Needed for the Kentucky user to track recoveries for outside contractors.

2.12.78.3 Technical Specifications
Create the FIN8084E-M report using the KY report as an example. Look at the actual production report for the totals at the bottom of the report. Look at the legacy logic to determine if an AR is paid in full in previous month we do not need to report in the future months. On the columns checks is cash receipts and recoups are system recoupments. This report should be the same as the FIN-807E-M report only using a different status code. The reason code of DG in the legacy code is DRG RETRO REVIEW and will be mapped a new code on the t_ar_reason table.

2.12.78.4 Clarifications
No associated clarifications found.

2.12.78.5 Associated Requirements

Requirement ID	Type
30.050.009.002.16	Financial Reporting
30.090.009.002.34	Financial Other Txn's
30.090.009.003.1	Financial Reporting

2.12.78.6 Associated System Objects

Technical Name	Object Type	Title
FIN-8084-M	Report	Monthly Recovered Status - Reason Code DG

2.12.78.7 Change Order Status

Status	Date
Change Order Written	09/28/2005
SE Assigned	03/03/2006
Define/Analyze In Progress	03/06/2006
Technical Design In Progress (obsolete)	03/07/2006
Construction in Progress	03/08/2006

Status	Date
UI - Ready for Tech Dsgn Wthru (obsolete)	03/31/2006
Ready for Model Office	04/18/2006
UAT Implemented	12/27/2006
Prod Implemented	05/23/2007

2.12.79 Create FIN-8095-W Mass Adj Rpt - 1158

Identifier	Type	Level	Subsystem	Computed	Estimated	Priority
1158	Change Order		Financial			1

2.12.79.1 Desired Solution
Create the Legacy KYMC8095-R001 Weekly Mass Adjustment Report.

2.12.79.2 Business Impact
Needed for the Kentucky user to track Mass adjustments.

2.12.79.3 Technical Specifications
Create the FIN-8095-W report using the KY report as an example. This report will need to display the Mass adjustments processed in the current cycle. Mass adjustments will be identified by the claim region. It may be easier to look at how the RA process is creating the adjustment sections of the RA.

2.12.79.4 Clarifications
No associated clarifications found.

2.12.79.5 Associated Requirements

Requirement ID	Type
30.050.009.002.16	Financial Reporting
30.090.009.003.1	Financial Reporting

2.12.79.6 Associated System Objects

Technical Name	Object Type	Title
FIN-8095-W	Report	Weekly Mass Adjustment Report

2.12.79.7 Change Order Status

Status	Date
Change Order Written	09/28/2005
Construction in Progress	07/19/2006
Ready for Model Office	08/14/2006
Model Office Implemented	08/30/2006
UAT Implemented	11/01/2006
Prod Implemented	05/23/2007

2.12.80 Create FIN-8087-A Rsn Code 77 - 1159

Identifier	Type	Level	Subsystem	Computed	Estimated	Priority
1159	Change Order		Financial			1

2.12.80.1 Desired Solution
Create the legacy KYMC8087-R001 Fiscal Year End Member status - Reason code 77 reports. The reason code 77 in the legacy system is 'member intentional PGM violate'.

2.12.80.2 Business Impact
Needed for the Kentucky user to track recoveries for outside contractors.

2.12.80.3 Technical Specifications
Create the FIN-8087-A report using the KY report as an example. The following reports have the same layout but will use a different set of date periods. The reason code 77 Recip Intentional PGM Violate will be mapped to a row on the T_AR_REASON table. The amounts shown on the report will need to be calculated using the T_AR_disp table. FIN-8077-M (member).

2.12.80.4 Clarifications
No associated clarifications found.

2.12.80.5 Associated Requirements

Requirement ID	Type
30.050.009.002.16	Financial Reporting
30.090.009.002.34	Financial Other Txn's
30.090.009.003.1	Financial Reporting

2.12.80.6 Associated System Objects

Technical Name	Object Type	Title
FIN-8087-SFY	Report	Fiscal Year End Receipts Status - REASON CODE 77

2.12.80.7 Change Order Status

Status	Date
Issue Identified	09/28/2005
Construction in Progress	02/22/2006
Unit Test in Progress (obsolete)	03/02/2006
Ready for Construction Wthru	03/11/2006
Ready for Model Office	04/10/2006
Model Office Implemented	05/26/2006
UAT Implemented	11/01/2006
Prod Implemented	05/23/2007

2.12.81 Create CMS Quarterly AR Reports - 1171

Identifier	Type	Level	Subsystem	Computed	Estimated	Priority
1171	Change Order		Financial			1

2.12.81.1 Desired Solution
Create the legacy KYMC9550-R001, KYMC9550-R002, KYMC9550-R003 CMS Quarterly Accounts Receivable Reports.

2.12.81.2 Business Impact
Needed for the Kentucky user to track ARs for CMS reporting.

2.12.81.3 Technical Specifications
This report will only show PROVIDER ARs.

Create the FIN-9551-Q, FIN-9552-Q and FIN-9553-Q reports using the KY reports as an example. Change name from HCFA to CMS. Change Amount Reported to Setup Amount. The Federal FYE is equal either the Cost settlement FYE, the letter date, or the Add date which ever is present. This report will only display the newly aged 60 days never reported to CMS ARs. A flag may need to be added to the AR table identifying ARs that have turned 60 days old (set to P) then after reporting on the 9551 report the ind would change to identify it has been reported (set to R). The 60 day AR process needs to run prior to these reports. The Bal as of End of Quarter is a calculated field. This report breaks on provider type. The 9552 report will show the carry over ARs that were already reported on the 99551. look to the prod examples I think there needs to be a Write Off column. The 9553 is just a summary page of the totals for the 9551 and 9552. These reports may be able to be combined into one single report. At a minimum they should be done in the same program. It looks like we will not have the indicator available so we will need to determine a way to only report the outstanding ARs once.

2.12.81.4 Clarifications
No associated clarifications found.

2.12.81.5 Associated Requirements

Requirement ID	Type
30.050.009.002.16	Financial Reporting
30.090.009.002.51	Financial Adjustments
30.090.009.003.1	Financial Reporting

2.12.81.6 Associated System Objects

Technical Name	Object Type	Title
FIN-9553-Q	Report	CMS Quarterly Accounts Receivable Report (Summary)
FIN-9552-Q	Report	CMS Quarterly Accounts Receivable Report (Carry Over)
FIN-9551-Q	Report	CMS Quarterly Accounts Receivable Report (Newly Aged)

2.12.81.7 Change Order Status

Status	Date
Change Order Written	09/28/2005
Construction in Progress	01/23/2006
Unit Test in Progress (obsolete)	03/10/2006
Ready for Model Office	04/10/2006
Model Office Implemented	05/26/2006
UAT Implemented	11/01/2006
Prod Implemented	05/23/2007

2.12.82 Create CMS Quarterly Member AR - 1172

Identifier	Type	Level	Subsystem	Computed	Estimated	Priority
1172	Change Order		Financial			1

2.12.82.1 Desired Solution
Create the legacy KYMC9570-R001, KYMC9570-R002, KYMC9570-R003 CMS Quarterly Accounts Receivable Recipient Reports.

2.12.82.2 Business Impact
Needed for the Kentucky user to track ARs for CMS reporting.

2.12.82.3 Technical Specifications
This report will only report ARs create for MEMBERS not providers.

Create the FIN-9571-Q, FIN-9572-Q and FIN-9573-Q reports using the KY reports as an example. Change name from HCFA to CMS. Change Amount Reported to Setup Amount. The Federal FYE is equal either the Cost settlement FYE, the letter date, or the Add date which ever is present. This report will only display the newly aged 60 days never reported to CMS ARs. A flag may need to be added to the AR table identifying ARs that have turned 60 days old (set to P) then after reporting on the 9571 report the ind would change to identify it has been reported (set to R). The 60 day AR process needs to run prior to these reports. The Bal as of End of Quarter is a calculated field. The 9572 report will show the carry over ARs that were already reported on the 99571. Look to the prod examples I think there needs to be a Write Off column. The 9573 is just a summary page of the totals for the 9571 and 9572. These reports may be able to be combined into one single report. At a minimum they should be done in the same program. It looks like we will not have the indicator available so we will need to determine a way to only report the outstanding ARs once.

2.12.82.4 Clarifications
No associated clarifications found.

2.12.82.5 Associated Requirements

Requirement ID	Type
30.050.009.002.16	Financial Reporting
30.090.009.002.51	Financial Adjustments
30.090.009.003.1	Financial Reporting

2.12.82.6 Associated System Objects

Technical Name	Object Type	Title
FIN-9571-Q	Report	CMS Quarterly Accounts Receivable Member Report - (Newly Aged)
FIN-9573-Q	Report	CMS Quarterly Accounts Receivable Member Report - (Summary)
FIN-9572-Q	Report	CMS Quarterly Accounts Receivable Member Report - (Carry Over)

2.12.82.7 Change Order Status

Status	Date
Change Order Written	09/28/2005
Construction in Progress	03/02/2006
Unit Test in Progress (obsolete)	03/10/2006
Ready for Model Office	04/10/2006
Model Office Implemented	05/26/2006
UAT Implemented	11/01/2006
Prod Implemented	05/23/2007

2.12.83 Modify FIN-1907-D Check Verify - 1173

Identifier	Type	Level	Subsystem	Computed	Estimated	Priority
1173	Change Order		Financial			1

2.12.83.1 Desired Solution
Modify the existing CORE Check Verification Log report.

2.12.83.2 Business Impact
Needed for the Kentucky user to track checks entered into the system.

2.12.83.3 Technical Specifications
Modify the existing FIN-1907-D report to match the KY reports. Add a column for Verify and RTP. Also add the information at the bottom of the report including the signature lines. The report will match the Commonwealths current KYMT0210-R001 report, and will have a blank line for checking to verify that the check was entered, and a RTP field which will be marked with an 'X' if the unit (row on t_cash_batch_num column num_batch is a RTP. At the bottom of the report print signature lines that can be used to sign off the checks received for the day.

2.12.83.4 Clarifications
No associated clarifications found.

2.12.83.5 Associated Requirements

Requirement ID	Type
30.050.009.002.16	Financial Reporting
30.090.009.003.1	Financial Reporting

2.12.83.6 Associated System Objects

Technical Name	Object Type	Title
FIN-1907-D	Report	Check Verification Log

2.12.83.7 Change Order Status

Status	Date
Issue Identified	09/28/2005
Construction in Progress	02/22/2006
Unit Test in Progress (obsolete)	03/02/2006
Ready for Construction Wthru	03/11/2006
Ready for Model Office	04/10/2006
Model Office Implemented	05/26/2006
UAT Implemented	11/01/2006
Prod Implemented	05/23/2007

2.12.84 Modify FIN-1008-W - 1174

Identifier	Type	Level	Subsystem	Computed	Estimated	Priority
1174	Change Order		Financial			1

2.12.84.1 Desired Solution
Modify the FIN-1008-W report to include the status and transaction date on the CCN line.

2.12.84.2 Business Impact
Meet the Commonwealth's business needs.

2.12.84.3 Technical Specifications
Modify the FIN-1008-W report to include the status of the CCN and the last transaction date. The report also needs to include the new field from the t_cash_receipt cde_tracking_status to show the reason. This report will map to the legacy reports KYMT2700-R002, and KYMT2705-R001 - the reports FIN-27051, FIN-2702DW should not be created they are to be a part of the FIN-1008-W report (based on reports workgroup). As long as we show the tracking reason.

2.12.84.4 Clarifications
No associated clarifications found.

2.12.84.5 Associated Requirements

Requirement ID	Type
30.050.009.002.16	Financial Reporting
30.090.009.003.1	Financial Reporting

2.12.84.6 Associated System Objects

Technical Name	Object Type	Title
FIN-1008-W	Report	Cash Dispositioned Not Posted

2.12.84.7 Change Order Status

Status	Date
Change Order Written	09/28/2005
Define/Analyze In Progress	03/10/2006
Construction in Progress	03/15/2006
Unit Test in Progress (obsolete)	03/15/2006
Ready for Construction Wthru	03/17/2006
Ready for Model Office	04/10/2006
Model Office Implemented	05/28/2006
UAT Implemented	11/01/2006
Prod Implemented	05/23/2007

2.12.85 Create FIN-27052-W DMS Unwork - 1175

Identifier	Type	Level	Subsystem	Computed	Estimated	Priority
1175	Change Order		Financial			1

2.12.85.1 Desired Solution
Create the FIN-27052-W report using the CORE FIN1008-W report as an example. This report will replace the KYMT2705-R002.

2.12.85.2 Business Impact
Needed for the Kentucky user to track DMS unworkable Cash txns.

2.12.85.3 Technical Specifications
Create the FIN2705-W Refer to DMS Unworkable Summary report. This report will only report cash with a unit of Unworkable DMS. The report should be created in the same program as the FIN-1008-W and have the same layout. The unit of unworkable will need to be added to the t_cash_batch_num table as a new row, and the num_batch number will be used in determining data for the report. The unworkable comment will come from the new field on the t_cash_receipt cde_tracking_status.

2.12.85.4 Clarifications
No associated clarifications found.

2.12.85.5 Associated Requirements

Requirement ID	Type
30.050.009.002.16	Financial Reporting
30.090.009.002.51	Financial Adjustments
30.090.009.003.1	Financial Reporting

2.12.85.6 Associated System Objects

Technical Name	Object Type	Title
FIN-2752-W	Report	Refer to DMS Unworkable Summary

2.12.85.7 Change Order Status

Status	Date
Change Order Written	10/11/2005
Define/Analyze In Progress	03/15/2006
Construction in Progress	03/16/2006
Unit Test in Progress (obsolete)	03/17/2006
Ready for Model Office	04/10/2006
Model Office Implemented	05/26/2006

Status	Date
UAT Implemented	11/01/2006
Prod Implemented	05/23/2007

2.12.86 Create FIN2911 TPL Refund-Recovery - 1176

Identifier	Type	Level	Subsystem	Computed	Estimated	Priority
1176	Change Order		Financial			1

2.12.86.1 Desired Solution
Create the Legacy KYMC2910-R001 TPL Refund Recovery Report.

2.12.86.2 Business Impact
Needed for the Kentucky user to track FFP refunds to the federal government.

2.12.86.3 Technical Specifications
Create the FIN-2910-M report using the KY report as an example. This is a very complicated report and it has 14 sections in the report. Each of these sections has its own layout and criteria. The existing KY documentation and production reports will need to be utilized to ensure we convert the report correctly. TPL will need to assist with helping determining how to identify the transactions tied to each category. The information from this report will be used to populate the summary reports.

2.12.86.4 Clarifications
No associated clarifications found.

2.12.86.5 Associated Requirements

Requirement ID	Type
30.050.009.002.16	Financial Reporting
30.090.009.002.51	Financial Adjustments
30.090.009.003.1	Financial Reporting
30.090.012.002.6A	RFP Split Requirement

2.12.86.6 Associated System Objects

Technical Name	Object Type	Title
FIN-2911-M	Report	Refund - Recovery Report

2.12.86.7 Change Order Status

Status	Date
Change Order Written	09/28/2005
SE Assigned	03/15/2006
Define/Analyze In Progress	03/17/2006
Construction in Progress	04/27/2006

Status	Date
Unit Test in Progress (obsolete)	05/31/2006
Ready for Model Office	06/02/2006
Model Office Implemented	06/20/2006
UAT Implemented	11/01/2006
Prod Implemented	05/23/2007

2.12.87 Create FIN-2912-M TPL Refund Sum - 1177

Identifier	Type	Level	Subsystem	Computed	Estimated	Priority
1177	Change Order		Financial			1

2.12.87.1 Desired Solution
Create the Legacy KYMC2910-R002 TPL Refund Recovery Summary Report.

2.12.87.2 Business Impact
The user to track FFP refunds to the federal government is needed for Kentucky.

2.12.87.3 Technical Specifications
Create the FIN-2912-M report using the KY report as an example. The existing KY documentation and production reports will need to be utilized to ensure we convert the report correctly. This report will display totals for sections A through J of the FIN-2911 report. TPL will need to assist with helping determining how to identify the transactions tied to each category This report should be a part of the program or job that create the FIN2911 report.

2.12.87.4 Clarifications
No associated clarifications found.

2.12.87.5 Associated Requirements

Requirement ID	Type
30.050.009.002.16	Financial Reporting
30.090.009.002.51	Financial Adjustments
30.090.009.003.1	Financial Reporting
30.090.012.002.6A	RFP Split Requirement

2.12.87.6 Associated System Objects

Technical Name	Object Type	Title
FIN-2912-M	Report	Refund - Recovery Report (Summary)

2.12.87.7 Change Order Status

Status	Date
Change Order Written	09/28/2005
SE Assigned	03/15/2006
Define/Analyze In Progress	05/24/2006
Construction in Progress	05/31/2006

Status	Date
Unit Test in Progress (obsolete)	06/06/2006
Ready for Model Office	06/14/2006
Model Office Implemented	06/23/2006
UAT Implemented	11/01/2006
Prod Implemented	05/23/2007

2.12.88 Create FIN-2913-M TPL Refund Fin - 1178

Identifier	Type	Level	Subsystem	Computed	Estimated	Priority
1178	Change Order		Financial			1

2.12.88.1 Desired Solution
Create the Legacy KYMC2910-R003 TPL Refund Recovery Financial Report.

2.12.88.2 Business Impact
The Kentucky user to track FFP refunds to the federal government is needed.

2.12.88.3 Technical Specifications
Create the FIN-2913-M report using the KY report as an example. The existing KY documentation and production reports will need to be utilized to ensure we convert the report correctly. This report will display totals for sections B and C of the FIN-2911 report. TPL will need to assist with helping determining how to identify the transactions tied to each category. This report should be a part of the program or job that create the FIN2911 report.

2.12.88.4 Clarifications
No associated clarifications found.

2.12.88.5 Associated Requirements

Requirement ID	Type
30.050.009.002.16	Financial Reporting
30.090.009.002.51	Financial Adjustments
30.090.009.003.1	Financial Reporting
30.090.012.002.6A	RFP Split Requirement

2.12.88.6 Associated System Objects

Technical Name	Object Type	Title
FIN-2913-M	Report	Refund - Recovery Financial Report (Summary)

2.12.88.7 Change Order Status

Status	Date
Change Order Written	09/28/2005
SE Assigned	03/15/2006
Define/Analyze In Progress	05/31/2006
Construction in Progress	05/31/2006

Status	Date
Unit Test in Progress (obsolete)	06/02/2006
Ready for Model Office	06/05/2006
Model Office Implemented	06/20/2006
UAT Implemented	11/01/2006
Prod Implemented	05/23/2007

2.12.89 Create FIN-2914-M TPL Ref TPL - 1179

Identifier	Type	Level	Subsystem	Computed	Estimated	Priority
1179	Change Order		Financial			1

2.12.89.1 Desired Solution
Create the Legacy KYMC2910-R004 TPL Refund Recovery TPL Report.

2.12.89.2 Business Impact
The Kentucky user needs to track FFP refunds to the federal government.

2.12.89.3 Technical Specifications
Create the FIN-2914-M report using the KY report as an example. The existing KY documentation and production reports will need to be utilized to ensure we convert the report correctly. This report will display totals for section A of the FIN-2911 report. TPL will need to assist with helping determining how to identify the transactions tied to each category. This report should be a part of the program or job that create the FIN2911 report.

2.12.89.4 Clarifications
This report is still NOT complete. We are waiting to see where POLICY TYPE is going to be in the tables, so we can determine the category. Category is needed to group the information on the report. So the report will run, but the understanding is that it will need to be modified in order for it to correctly report the data.

2.12.89.5 Associated Requirements

Requirement ID	Type
30.050.009.002.16	Financial Reporting
30.090.009.002.51	Financial Adjustments
30.090.009.003.1	Financial Reporting
30.090.012.002.6A	RFP Split Requirement

2.12.89.6 Associated System Objects

Technical Name	Object Type	Title
FIN-2914-M	Report	Refund Recovery Report (Summary)

2.12.89.7 Change Order Status

Status	Date
Change Order Written	09/28/2005
SE Assigned	01/26/2006
SE Assigned	06/01/2006

Status	Date
Define/Analyze In Progress	06/06/2006
Construction in Progress	06/21/2006
Unit Test in Progress (obsolete)	08/08/2006
Ready for Model Office	08/09/2006
Model Office Implemented	08/31/2006
UAT Implemented	11/01/2006
Prod Implemented	05/23/2007

2.12.90 Create FIN-2916-M TPL Ref - 1180

Identifier	Type	Level	Subsystem	Computed	Estimated	Priority
1180	Change Order		Financial			1

2.12.90.1 Desired Solution
Create the Legacy KYMC2910-R006 TPL Refund Recovery TPL Report.

2.12.90.2 Business Impact
The Kentucky user needs to track FFP refunds to the federal government.

2.12.90.3 Technical Specifications
Create the FIN-2916-M report using the KY report as an example. The existing KY documentation and production reports will need to be utilized to ensure we convert the report correctly. This report will display totals for sections I and J of the FIN-2911 report. TPL will need to assist with helping determining how to identify the transactions tied to each category. This report should be a part of the program or job that create the FIN2911 report.

2.12.90.4 Clarifications
No associated clarifications found.

2.12.90.5 Associated Requirements

Requirement ID	Type
30.050.009.002.16	Financial Reporting
30.090.009.002.51	Financial Adjustments
30.090.009.003.1	Financial Reporting
30.090.012.002.6A	RFP Split Requirement

2.12.90.6 Associated System Objects

Technical Name	Object Type	Title
FIN-2916-M	Report	Refund -- Recovery Report (Summary)

2.12.90.7 Change Order Status

Status	Date
Change Order Written	09/28/2005
SE Assigned	06/01/2006
Define/Analyze In Progress	06/06/2006
Construction in Progress	06/09/2006

Status	Date
Unit Test in Progress (obsolete)	06/13/2006
Ready for Model Office	06/14/2006
Model Office Implemented	06/23/2006
UAT Implemented	11/01/2006
Prod Implemented	05/23/2007

2.12.91 Payment Hold Include Exclude Ind - 1198

Identifier	Type	Level	Subsystem	Computed	Estimated	Priority
1198	Change Order		Financial			

2.12.91.1 Desired Solution
As specified by the Commonwealth, provider specialty should be included in the Provider Hold panels.

2.12.91.2 Business Impact
Meet the Commonwealth's business needs.

2.12.91.3 Technical Specifications
Add Provider Specialty Drop Down box and the ability to add and delete a Provider Specialty.

2.12.91.4 Clarifications
Change Order Estimation was based on Estimation Guidelines--Small Amount of Panel Modification. Estimation Done by Haydee Olivas.

2.12.91.5 Associated Requirements

Requirement ID	Type
30.090.009.002.36	Financial Online
30.090.009.002.8	Financial Fiscal Pend

2.12.91.6 Associated System Objects

Technical Name	Object Type	Title
Fin. PaymentHoldPanel.ascx	Panel	FPHI Include-Exclude Indicators

2.12.91.7 Change Order Status

Status	Date
Issue Identified	09/29/2005
Change Order Written	10/06/2005
SE Assigned	01/30/2006
Technical Design In Progress (obsolete)	01/30/2006
UI - Ready for MO Impl (obsolete)	05/22/2006
UAT Implemented	02/19/2007
Prod Implemented	05/23/2007

2.12.92 Modify T_ACCT_REC Table Add Fields - 1199

Identifier	Type	Level	Subsystem	Computed	Estimated	Priority
1199	Change Order		Financial			1

2.12.92.1 Desired Solution
Modify the T_ACCT_REC table to meet the data request of the Commonwealth.

2.12.92.2 Business Impact
Table changes are required to allow the system to meet the Commonwealth's requirements.

2.12.92.3 Technical Specifications
Add the following fields to the T_ACCT_REC and the T_FIN_PROCESS_AR table:

- - LOCATION_CODE - 2 bytes char;
- - COST SETTLE FYE – date; and,
- - LETTER_DATE – date.

2.12.92.4 Clarifications
No associated clarifications found.

2.12.92.5 Associated Requirements

Requirement ID	Type
30.090.009.002.33	Financial Online

2.12.92.6 Associated System Objects

Technical Name	Object Type	Title
No associated Change Orders found.		

2.12.92.7 Change Order Status

Status	Date
Change Order Written	09/29/2005
Ready for Model Office	04/02/2006
Model Office Implemented	04/17/2006
UAT Implemented	11/01/2006
Prod Implemented	05/23/2007

2.12.93 Add T_LIEN_COMMENT Table - 1201

Identifier	Type	Level	Subsystem	Computed	Estimated	Priority
1201	Change Order		Financial			1

2.12.93.1 Desired Solution
Add the T_LIEN_COMMENT table to meet the data request of the Commonwealth.

2.12.93.2 Business Impact
Table changes are required to allow the system to meet the Commonwealth's requirements.

2.12.93.3 Technical Specifications
Create the T_LIEN_COMMENT table:

- - SAK_LIEN - number 9;
- - NUM_SEQ - number 4;
- - DSC_LONG - Char 250;
- - USER_ID - number 8; and,
- - DTE_ADD - Date

2.12.93.4 Clarifications
No associated clarifications found.

2.12.93.5 Associated Requirements

Requirement ID	Type
30.090.009.002.36	Financial Online

2.12.93.6 Associated System Objects

Technical Name	Object Type	Title
No associated Change Orders found.		

2.12.93.7 Change Order Status

Status	Date
Change Order Written	09/29/2005
Ready for Model Office	04/02/2006
Model Office Implemented	04/17/2006
UAT Implemented	11/01/2006
Prod Implemented	05/23/2007

2.12.94 Modify T_CASH_RCPT_DISP Add Fields - 1202

Identifier	Type	Level	Subsystem	Computed	Estimated	Priority
1202	Change Order		Financial			1

2.12.94.1 Desired Solution
Modify the T_CASH_RCPT_DISP table to meet the data request of the Commonwealth.

2.12.94.2 Business Impact
Table changes are required to allow the system to meet the Commonwealth's requirements.

2.12.94.3 Technical Specifications
Add the following fields to the T_CASH_RCPT_DISP and the T_FIN_PROCESS_CASH_DISP tables:

- - related txn paid date - date - TPL ind - Char used to track recoupment FFP; and,
- TPL Indicator was not added to Cash Recipit Disposition Panel.

2.12.94.4 Clarifications

2.12.94.5 Associated Requirements

Requirement ID	Type
30.090.009.002.36	Financial Online

2.12.94.6 Associated System Objects

Technical Name	Object Type	Title
No associated Change Orders found.		

2.12.94.7 Change Order Status

Status	Date
Change Order Written	09/29/2005
Ready for Model Office	04/02/2006
Model Office Implemented	04/17/2006
UAT Implemented	11/01/2006
Prod Implemented	05/23/2007

2.12.95 Modify T_CASH_RECEIPT Table Add - 1203

Identifier	Type	Level	Subsystem	Computed	Estimated	Priority
1203	Change Order		Financial			1

2.12.95.1 Desired Solution
Modify the T_CASH_RECEIPT table to meet the data request of the Commonwealth.

2.12.95.2 Business Impact
Table changes are required to allow the system to meet the Commonwealth's requirements.

2.12.95.3 Technical Specifications
Add the following field to the T_CASH_RECEIPT table: - UNWORKABLE_RSN – int.

Create a table to hold the unworkable reasons T_CASH_STATUS, REASON_CODE_SAK and - REASON_DSC.

2.12.95.4 Clarifications
No associated clarifications found.

2.12.95.5 Associated Requirements

Requirement ID	Type
30.090.009.002.36	Financial Online

2.12.95.6 Associated System Objects

Technical Name	Object Type	Title
No associated Change Orders found.		

2.12.95.7 Change Order Status

Status	Date
Change Order Written	09/29/2005
Ready for Model Office	04/02/2006
Model Office Implemented	04/17/2006
UAT Implemented	11/01/2006
Prod Implemented	05/23/2007

2.12.96 Create T_FIN_REMIT Table - 1204

Identifier	Type	Level	Subsystem	Computed	Estimated	Priority
1204	Change Order		Financial			1

2.12.96.1 Desired Solution
Create a new table T_FIN_REMIT to tie the RA and the check together.

2.12.96.2 Business Impact
Table changes are required to allow the system to meet the Commonwealth's requirements.

2.12.96.3 Technical Specifications
Create the T_FIN_REMIT table to tie the providers check and RA together. The table should have the following fields:

- -T_FIN_REMIT
  (Entity that holds information about a remittance advice generated out of the MMIS);
- SAK_REMIT (PK);
- CHECK_SAK
  (FK on t_check, will be -1 for remits without any corresponding payment activity);
- DTE_CREATED (number);
- IND_835 (char 1);
- NUM_PAGES (number); and,
- SAK_FIN_CYCLE (FK on t_financial_cycle).

2.12.96.4 Clarifications
No associated clarifications found.

2.12.96.5 Associated Requirements

Requirement ID	Type
30.090.009.002.3	Financial RA's

2.12.96.6 Associated System Objects

Technical Name	Object Type	Title
No associated Change Orders found.		

2.12.96.7 Change Order Status

Status	Date
Change Order Written	09/29/2005

Status	Date
Ready for Construction Wthru	04/02/2006
Ready for Model Office	04/17/2006
Model Office Implemented	05/22/2006
UAT Implemented	11/01/2006
Prod Implemented	05/23/2007

2.12.97 Modify T_EXPENDITURE Add Fields - 1205

Identifier	Type	Level	Subsystem	Computed	Estimated	Priority
1205	Change Order		Financial			1

2.12.97.1 Desired Solution
Modify the T_EXPENDITURE table to meet the data request of the Commonwealth.

2.12.97.2 Business Impact
Table changes are required to allow the system to meet the Commonwealth's requirements.

2.12.97.3 Technical Specifications
Add the following fields to the T_EXPENDITURE table:

LOCATION_CODE - 2 bytes char; and,

COST_SETTLE FYE – date.

2.12.97.4 Clarifications
No associated clarifications found.

2.12.97.5 Associated Requirements

Requirement ID	Type
30.090.009.002.36	Financial Online

2.12.97.6 Associated System Objects

Technical Name	Object Type	Title
No associated Change Orders found.		

2.12.97.7 Change Order Status

Status	Date
Change Order Written	09/29/2005
Ready for Model Office	04/02/2006
Model Office Implemented	04/17/2006
UAT Implemented	11/01/2006
Prod Implemented	05/23/2007

2.12.98 Add T_FIN_PRUDENT_PAY_P And Type - 1206

Identifier	Type	Level	Subsystem	Computed	Estimated	Priority
1206	Change Order		Financial			1

2.12.98.1 Desired Solution
Add the following prudent pay table to allow for providers and provider types.

2.12.98.2 Business Impact
Table changes are required to allow the system to meet the Commonwealth's requirements.

2.12.98.3 Technical Specifications
Add the following tables:

- T_FIN_PRU_PAY_PROV;
- T_FIN_PRU_PAY_PROV_TYPE;
- T_FIN_PRU_PAY_PROV;
- SAK_PUR_PAY – int;
- PROVIDER_ID;
- SAK_PUR_PAY – int; and,
- PROVIDER_TYPE.

It has been determined that prudent pay will be included in the payment hold logic to give additional selection criteria.

2.12.98.4 Clarifications
No associated clarifications found.

2.12.98.5 Associated Requirements

Requirement ID	Type
30.090.009.002.36	Financial Online

2.12.98.6 Associated System Objects

Technical Name	Object Type	Title
No associated Change Orders found.		

2.12.98.7 Change Order Status

Status	Date
Change Order Written	09/29/2005

Status	Date
Ready for Model Office	04/02/2006
Model Office Implemented	04/17/2006
UAT Implemented	11/01/2006
Prod Implemented	05/23/2007

2.12.99 Modify T_PAYMENT_HOLD Add New - 1210

Identifier	Type	Level	Subsystem	Computed	Estimated	Priority
1210	Change Order		Financial			1

2.12.99.1 Desired Solution
Modify the T_PAYMENT_HOLD table and add a new T_PAY_HOLD_PR_SPEC table to meet the fiscal pend needs of the Commonwealth.

2.12.99.2 Business Impact
Table changes are required to allow the system to meet the Commonwealth's requirements.

2.12.99.3 Technical Specifications
Add the following to T_PAYMENT_HOLD:

- IND_IN_EX_PR_SPEC;
- Create a new table T_PAY_HOLD_SPEC
- SAK_PAYMENT_HOLD;
- CDE_PROV_SPEC;
- CNT.

2.12.99.4 Clarifications
No associated clarifications found.

2.12.99.5 Associated Requirements

Requirement ID	Type
30.090.009.002.8	Financial Fiscal Pend

2.12.99.6 Associated System Objects

Technical Name	Object Type	Title
No associated Change Orders found.		

2.12.99.7 Change Order Status

Status	Date
Change Order Written	09/29/2005
Ready for Model Office	04/02/2006
Model Office Implemented	04/17/2006
UAT Implemented	11/01/2006
Prod Implemented	05/23/2007

2.12.100 Create T_AR_PAYMENT_PLAN Table - 1212

Identifier	Type	Level	Subsystem	Computed	Estimated	Priority
1212	Change Order		Financial			1

2.12.100.1 Desired Solution

The Commonwealth request a way to track payment plans. A new table needs to be created to maintain the related payments tied to the AR.

2.12.100.2 Business Impact

Table changes are required to allow the system to meet the Commonwealth's requirements.

2.12.100.3 Technical Specifications

Create the T_AR_PAYMENT_PLAN table. The table should include the following:

- DTE_DUE;
- AMT_PRINCIPAL;
- AMT_INTEREST; and,
- PAYMENT_IND

2.12.100.4 Clarifications

No associated clarifications found.

2.12.100.5 Associated Requirements

Requirement ID	Type
30.090.009.002.37	Financial A/R's

2.12.100.6 Associated System Objects

Technical Name	Object Type	Title
No associated Change Orders found.		

2.12.100.7 Change Order Status

Status	Date
Change Order Written	09/29/2005
Ready for Model Office	04/02/2006
Model Office Implemented	04/17/2006
UAT Implemented	11/01/2006
Prod Implemented	05/23/2007

2.12.101 Create Withholding Tables - 1213

Identifier	Type	Level	Subsystem	Computed	Estimated	Priority
1213	Change Order		Financial			1

2.12.101.1 Desired Solution

The Commonwealth request a way to withhold payments by a percentage and then have the ability to return the amount withheld.

2.12.101.2 Business Impact

Table changes are required to allow the system to meet the Commonwealth's requirements.

2.12.101.3 Technical Specifications

Create the tables needed to maintain the withholding process requested by the Commonwealth. The process will require new pages and panels but may be able to utilize the T_LIEN tables. The T_LIEN and T_LIEN_DISP tables will be used to contain the withholding data. There will be a new page and panels to support the withholding process. There will also be a new reason type code tied to the lien reason codes to distinguish the withholdings from the normal lien process.

2.12.101.4 Clarifications

No associated clarifications found.

2.12.101.5 Associated Requirements

Requirement ID	Type
30.090.009.002.28	Financial Capitations
30.090.009.002.29	Financial Capitations

2.12.101.6 Associated System Objects

Technical Name	Object Type	Title
No associated Change Orders found.		

2.12.101.7 Change Order Status

Status	Date
Change Order Written	09/29/2005
Ready for Model Office	04/02/2006
Model Office Implemented	04/17/2006
UAT Implemented	11/01/2006
Prod Implemented	05/23/2007

2.12.102 Add RA Number Into The System - 1214

Identifier	Type	Level	Subsystem	Computed	Estimated	Priority
1214	Change Order		Financial			1

2.12.102.1 Desired Solution

Currently the RA number is not carried in the Financial system as a data item, the number only shows on the RA. There are several reports and panels that require the RA number. The RA number will be carried in the new KY system. For more detail see Core CO 11970.

2.12.102.2 Business Impact

The Commonwealth needs the RA number to tie RAs to checks.

2.12.102.3 Technical Specifications

A new table will be created to tie the check and the RA together (T_CHECK_RA_XREF and T_FIN_PROCESS_CHECK_RA-XREF) when the RA is created the system needs to make an entry in the table to tie the two together. The system needs to be modified to populate the RA number and check number if there is a check on the new table. The new table will have two versions one will be the main table the other will need to be a process table and there will need to be a job created to upload the process table to the main xref table.

2.12.102.4 Clarifications

No associated clarifications found.

2.12.102.5 Associated Requirements

Requirement ID	Type
30.090.009.002.3	Financial RA's

2.12.102.6 Associated System Objects

Technical Name	Object Type	Title
finp_RA	Program	Create checks and remittance advices

2.12.102.7 Change Order Status

Status	Date
Ready for Model Office	04/24/2006
Model Office Implemented	05/28/2006
UAT Implemented	11/01/2006
Prod Implemented	05/23/2007

2.12.103 Modify The Prudent Pay Process - 1215

Identifier	Type	Level	Subsystem	Computed	Estimated	Priority
1215	Change Order		Financial			1

2.12.103.1 Desired Solution
The prudent pay process needs to include provider type and provider ID.

2.12.103.2 Business Impact
The Commonwealth currently can control prudent pay by provider type and ID. The prudent pay process is the process to hold off on claims payment until the claim has aged to a specified number of days.

2.12.103.3 Technical Specifications
Two new tables have been created and new panels have been added to the prudent pay system. The batch system needs to be changed to include provider type an ID as criteria. The logic needing to be changed it located in the fin_payment_hold.sc pgm. Look at the current hold logic for provider type and spec and duplicate it for the prudent pay logic. There is talk of combining the payment hold and prudent pay.

2.12.103.4 Clarifications
No associated clarifications found.

2.12.103.5 Associated Requirements

Requirement ID	Type
30.090.009.002.2	Financial A/R's

2.12.103.6 Associated System Objects

Technical Name	Object Type	Title
fin_payment_holds	Program	Payment holds

2.12.103.7 Change Order Status

Status	Date
Ready for Model Office	09/29/2005
Model Office Implemented	04/15/2006
UAT Implemented	11/01/2006
Prod Implemented	05/23/2007

2.12.104 Modify Fiscal Pend Add Pr Spec - 1216

Identifier	Type	Level	Subsystem	Computed	Estimated	Priority
1216	Change Order		Financial			1

2.12.104.1 Desired Solution

The commonwelath needs to be able to fiscal pend claims based on provider specialty.

2.12.104.2 Business Impact

The Commonwealth will have the ablity to control the weekly cycle payment by limiting claims by provider specialty.

2.12.104.3 Technical Specifications

A new table (T_PAY_HOLD_PR_SPEC) has been added and the panels have been modified to allow for the provider specialty criteria. Changes to the hold batch logic (fin_payment_holds.sc) needs to be made to hold claims by provider specialty. The code should follow the same logic as the provider type logic.fin_payment_holds.sc. The provider specialty will need to be added to the intital cursor of the hold process.

2.12.104.4 Clarifications

No associated clarifications found.

2.12.104.5 Associated Requirements

Requirement ID	Type
30.090.009.002.8	Financial Fiscal Pend

2.12.104.6 Associated System Objects

Technical Name	Object Type	Title
fin_payment_holds	Program	Payment holds

2.12.104.7 Change Order Status

Status	Date
Ready for Model Office	09/29/2005
Model Office Implemented	04/15/2006
UAT Implemented	11/01/2006
Prod Implemented	05/23/2007

2.12.105 Modify The Financial Extractor - 1217

Identifier	Type	Level	Subsystem	Computed	Estimated	Priority
1217	Change Order		Financial			1

2.12.105.1 Desired Solution
Modify the financial extractor logic to include the changes required by the claims system and NPI. COS is NOT included in this change. MAR subsystem should take care of this.

2.12.105.2 Business Impact
Finacial reports require that the COS is present at the time financial runs.

2.12.105.3 Technical Specifications
Modify the claims extactors to include the assignment of the COS. The KY COS uses provider type and claim type to assign the codes. The system may need to expand to also include the prov spec in the mapping. The COS needs to be added to the t_clm_pgm_xref table which is owned by the claims team. This assignment may be completed in the final part of adjuication otherwise it will need to occur in the financial extractor.
DSS 11-22 placing the COS on the t_clm_pgm_xref is not the best solution since the COS could change, it may be better to let MAR assign the COS in there normal weekly process and then make the xref table available to financial so they can do their reporting. See the mapping document at the bottom of the CO for mapping details. Other changes will be needed to the extractors due to changes in NPI and claims data.

2.12.105.4 Clarifications
Financial reporting may be able to access the COS from DSS system and be able to create all the reports needed. Darren.

2.12.105.5 Associated Requirements

Requirement ID	Type
30.090.003.002.12B	RFP Split Requirement

2.12.105.6 Associated System Objects

Technical Name	Object Type	Title
finp_extractors	Program	financial claim extract

2.12.105.7 Change Order Status

Status	Date
Ready for Model Office	09/29/2005
Model Office Implemented	04/15/2006
UAT Implemented	11/01/2006
Prod Implemented	05/23/2007

2.12.106 Create Payment Plan Process - 1219

Identifier	Type	Level	Subsystem	Computed	Estimated	Priority
1219	Change Order		Financial			1

2.12.106.1 Desired Solution

ARs can be tied to payment plans to allow a provider to make monthly payments on the outstanding balance. If a payment plan is for a period of time greater than 6 months the Commonwealth may to also collect interest. If a payment is missed then the system needs to auto recoup the current months outstanding balance.

2.12.106.2 Business Impact

This allows the provider to slowly pay off large debts.

2.12.106.3 Technical Specifications

A new table has been added and the panels have been modified to create payment plans. The system needs to be modified to identify if a payment has been missed and then be able to system recoup all segments that are late. If a recoupment is made to an AR with a payment plan the payment plan segment must be updated. Review the attached document for more detail information. This change may need to create a process table to allow the system to be re-run. The current design has the balance of the segment being carried on the row and not use separate disps for each segment. If the process table is needed then an additional job will need to be added to update the master table once the cycle completes. The system will only recoup the principal amount, the interest will need to be manually recovered. The interest and principal amounts must be kept separate.

2.12.106.4 Clarifications

No associated clarifications found.

2.12.106.5 Associated Requirements

Requirement ID	Type
30.090.009.002.37	Financial A/R's

2.12.106.6 Associated System Objects

Technical Name	Object Type	Title
finp_pmt	Program	Financial Main Payment Process

2.12.106.7 Change Order Status

Status	Date
Change Order Written	09/29/2005
SE Assigned	05/11/2006
Define/Analyze In Progress	05/11/2006

Status	Date
Design Complete	05/23/2006
Ready for Model Office	06/07/2006
Model Office Implemented	08/31/2006
UAT Implemented	11/01/2006
Ready for Model Office	11/29/2006
UAT Implemented	12/12/2006
Prod Implemented	05/23/2007

2.12.107 New AR Status - 1220

Identifier	Type	Level	Subsystem	Computed	Estimated	Priority
1220	Change Order		Financial			1

2.12.107.1 Desired Solution
The system needs to be able to handle a AR in "charge off status".

2.12.107.2 Business Impact
There is a new status of charge off.

2.12.107.3 Technical Specifications
ARs in the new system need to be able to be set to "Charge Off". This new status stops the AR from being reported as outstanding but it doesn't close the AR the balance remains. Make sure this new status dosen't affect hard coded ar status code. The following code uses the ar status fin3004w.sc - four places looking for A in the sql this should not be a problem. fin_ar_close.sc - looks for ARs not in a status of C and checks to see if the disp amounts equal the setup then set the AR status to C. this pgm may need to be reviewed to make sure it still works with increase/decrease dispositions. ARs in a charge off status should still have a balance so they should be ok.

finp1184.sc - 7 occurances, this is the AR extractor pgm, we would not want to bring in charge off status ARs into the cycle so the sql may need to change to be a not in ('C', 'X');

finp2060.sc - looking for status A - creates the fin-3005-m report only reporting active AR;

finp2061.sc - looking for status A - creates the fin-3010-w report only reporting active AR;

finp3001.sc - looking for status A - creates the fin-3001 report only reporting active AR;

finp3003.sc - looking for status A - creates the fin-3003 report only reporting active AR;

finp_sched_ar.sc - looking for non closed AR's this may need to change to include status of X charge off.; and,

finio0180.sc - creates ar records setting the status to A this should be ok.

2.12.107.4 Clarifications
No associated clarifications found.

2.12.107.5 Associated Requirements

Requirement ID	Type
30.090.009.001.3	Financial Online
30.090.009.002.34	Financial Other Txn's
30.090.009.002.37	Financial A/R's

2.12.107.6 Associated System Objects

Technical Name	Object Type	Title

Technical Name	Object Type	Title
w_drug_rebate_route	Window	Drug Rebate Main Menu
finp_sched_exp	Program	Financial expenditure extractor
finp_sched_cap	Program	finp_sched_cap
finp_sched_ar	Program	Select A/Rs for processing in the financial cycle
finp_sched_cash	Program	finp_sched_cash
finp_sched_voids	Program	Financial Voids Extractor

2.12.107.7 Change Order Status

Status	Date
Change Order Written	09/29/2005
Ready for Unit Test (obsolete)	01/18/2006
Ready for Model Office	04/10/2006
Model Office Implemented	04/15/2006
UAT Implemented	11/01/2006
Prod Implemented	05/23/2007

2.12.108 Changes to CASH Tracking - 1221

Identifier	Type	Level	Subsystem	Computed	Estimated	Priority
1221	Change Order		Financial			1

2.12.108.1 Desired Solution
The Cash system need to be inhanced to track disp for FFP reporting.

2.12.108.2 Business Impact
Cash needs to be modifed to correctly track FFP reporting.

2.12.108.3 Technical Specifications
The cash system needs to be able to identify where the cash came from and where it was disp. And must be able to identify the following:

- lockbox txns;
- TPL souces; and,
- system write off of cash less than five dollars.

More work will need to be done in design to determine all the cash sources that need to be tracked for reporting purposes. This change will be tied to the TPL refund reports CO 1176 - 1180 and also the fin-807e report CO 1149.

2.12.108.4 Clarifications
No associated clarifications found.

2.12.108.5 Associated Requirements

Requirement ID	Type
30.090.009.002.51	Financial Adjustments
30.090.009.003.1	Financial Reporting

2.12.108.6 Associated System Objects

Technical Name	Object Type	Title
FIN-2752-W	Report	Refer to DMS Unworkable Summary
FIN-2912-M	Report	Refund - Recovery Report (Summary)
FIN-807E2-M	Report	Total Recovered For The Month Non - Lock Box Myers and Stauffer Checks
FIN-2911-M	Report	Refund - Recovery Report
FIN-2914-M	Report	Refund.Recovery Report (Summary)
FIN-2916-M	Report	Refund -- Recovery Report (Summary)

Technical Name	Object Type	Title
FIN-2913-M	Report	Refund - Recovery Financial Report (Summary)

2.12.108.7 Change Order Status

Status	Date
Change Order Written	09/29/2005
Model Office Implemented	06/20/2006
UAT Implemented	11/01/2006
Prod Implemented	05/23/2007

2.12.109 Modify The Reissue Check Void - 1223

Identifier	Type	Level	Subsystem	Computed	Estimated	Priority
1223	Change Order		Financial			1

2.12.109.1 Desired Solution

The Commonwealth is the owner of all the checks and eft processing so when a reissue is done the system should not try to create a new check.

2.12.109.2 Business Impact

The Commonwealth needs to track reissues.

2.12.109.3 Technical Specifications

Modify the reissue panels to not generate a new payout but to just track the new check. The Commonwealth will create the new check using the same check number. If the reissue is after a year a new check number will be used. The system needs to change since EDS is not writing the check in KY.

2.12.109.4 Clarifications

Change Order Estimation was based on Estimation Guidelines--Medium Amount of Panel Modification. Estimation Done by Haydee Olivas.

2.12.109.5 Associated Requirements

Requirement ID	Type
30.090.009.002.34	Financial Other Txn's
30.090.009.002.36	Financial Online

2.12.109.6 Associated System Objects

Technical Name	Object Type	Title
No associated Change Orders found.		

2.12.109.7 Change Order Status

Status	Date
Change Order Written	09/29/2005
Construction in Progress	07/13/2006
Ready for Model Office	09/07/2006
UAT Implemented	12/27/2006
Prod Implemented	05/23/2007

2.12.110 Create Legacy 8000 Series Rpt - 1776

Identifier	Type	Level	Subsystem	Computed	Estimated	Priority
1776	Change Order		Financial			1

2.12.110.1 Desired Solution
The provider reimbursement data needs to be put into a format that can be used by the Commonwealth staff to create the required worksheets.

2.12.110.2 Business Impact
The data in an electronic format will allow the Commonwealth to quickly load and create the required worksheets.

2.12.110.3 Technical Specifications
There is a workgroup that will take place to determine the data elements needed to meet the Commonwealth's needs.

The reports include:

- KYMC8000 R007 R008 R009 R010;
- KYMC800K R007 R008 R009 R010;
- KYMC800L R007 R008 R009 R010; and,
- KYMC800Q R007 R008 R009 R010

2.12.110.4 Clarifications
No associated clarifications found.

2.12.110.5 Associated Requirements

Requirement ID	Type
30.050.007.002.47	Financial Payments
30.050.009.002.16	Financial Reporting
30.090.007.003.15	Financial Reporting
30.090.009.003.1	Financial Reporting

2.12.110.6 Associated System Objects

Technical Name	Object Type	Title
No associated Change Orders found.		

2.12.110.7 Change Order Status

Status	Date

Status	Date
Change Order Written	12/18/2005
SE Assigned	06/08/2006
Define/Analyze In Progress	06/15/2006
Construction in Progress	06/26/2006
Unit Test in Progress (obsolete)	08/08/2006
Ready for Model Office	08/24/2006
Model Office Implemented	08/31/2006
UAT Implemented	11/01/2006
Prod Implemented	05/23/2007

2.12.111 Create The Quarterly TPL RRR rpt - 1777

Identifier	Type	Level	Subsystem	Computed	Estimated	Priority
1777	Change Order		Financial			1

2.12.111.1 Desired Solution
Create the legacy quarterly TPL refund recovery reports.

2.12.111.2 Business Impact
It has been determined that Commonwealth needs to have the RRR quarterly reports.

2.12.111.3 Technical Specifications
Create the KYMT2920 R001, KYMT2920 R002, KYMT2920 R003, KYMT2920 R004, and KYMT2920 R006. These reports will follow the same format as the monthly reports.

2.12.111.4 Clarifications
No associated clarifications found.

2.12.111.5 Associated Requirements

Requirement ID	Type
30.050.009.002.16	Financial Reporting
30.090.007.003.15	Financial Reporting
30.090.009.003.1	Financial Reporting

2.12.111.6 Associated System Objects

Technical Name	Object Type	Title
No associated Change Orders found.		

2.12.111.7 Change Order Status

Status	Date
Change Order Written	12/18/2005
SE Assigned	06/15/2006
Define/Analyze In Progress	07/05/2006
Construction in Progress	07/13/2006
Unit Test in Progress (obsolete)	07/14/2006
Ready for Model Office	07/18/2006
Model Office Implemented	08/30/2006
UAT Implemented	11/01/2006
Prod Implemented	05/23/2007

2.12.112 Identify Payment Pull Checks - 2065

Identifier	Type	Level	Subsystem	Computed	Estimated	Priority
2065	Change Order		Financial			1

2.12.112.1 Desired Solution

There needs to be a way to identify checks that have been pulled prior to mailing. The legacy system calls this process ESCROW. There is a panel in the provider subsystem that identifies providers who will have there payments pulled and financial prints report listing all the checks that need to be pulled in the cycle. There isn't a way to see on going which checks have been pulled.

2.12.112.2 Business Impact

Needed for the Commonwealth.

2.12.112.3 Technical Specifications

Add logic to the t_fin_pmt process to assign a new payment status of 'P' (pulled) if a provider is on the pull list. The current status values are C - cleared, V - voided, I - Issued, R - Reissue. This new status will allow the user to view pulled checks using the payment panel.

2.12.112.4 Clarifications

No associated clarifications found.

2.12.112.5 Associated Requirements

Requirement ID	Type
No associated Requirements found.	

2.12.112.6 Associated System Objects

Technical Name	Object Type	Title
No associated Change Orders found.		

2.12.112.7 Change Order Status

Status	Date
Change Order Written	02/13/2006
SE Assigned	06/05/2006
Technical Design In Progress (obsolete)	06/06/2006
Ready for Tech Walkthrough	06/07/2006
Construction in Progress	06/07/2006
Technical Design In Progress	06/13/2006

Status	Date
(obsolete)	
Unit Test in Progress (obsolete)	06/13/2006
Ready for Construction Wthru	06/14/2006
Ready for Model Office	06/14/2006
Model Office Implemented	06/30/2006
Ready for Model Office	06/30/2006
Model Office Implemented	09/08/2006
UAT Implemented	11/01/2006
Ready for Model Office	11/10/2006
UAT Implemented	11/16/2006
Prod Implemented	05/23/2007

2.12.113 Modify And Create Tables For NPI - 2154

Identifier	Type	Level	Subsystem	Computed	Estimated	Priority
2154	Change Order		Financial			1

2.12.113.1 Desired Solution
The following tables need to be modified for NPI changes.

2.12.113.2 Business Impact
This will allow the use of NPI in the MMIS.

2.12.113.3 Technical Specifications
Create a new table to hold provider ID's that the financial system can access. This will be a temporary table created each cycle. The table name is T_FIN_PROCESS_PROV_ID.

2.12.113.4 Clarifications
No associated clarifications found.

2.12.113.5 Associated Requirements

Requirement ID	Type
No associated Requirements found.	

2.12.113.6 Associated System Objects

Technical Name	Object Type	Title
No associated Change Orders found.		

2.12.113.7 Change Order Status

Status	Date
Change Order Written	03/11/2006
Ready for Model Office	04/02/2006
Model Office Implemented	04/17/2006
UAT Implemented	11/01/2006
Prod Implemented	05/23/2007

2.12.114 Allow Updates To The Rollup AR - 2183

Identifier	Type	Level	Subsystem	Computed	Estimated	Priority
2183	Change Order		Financial			1

2.12.114.1 Desired Solution
Allow the user to update and add rows to the AR rollup panel.

2.12.114.2 Business Impact

2.12.114.3 Technical Specifications
The AR rollup panel needs to allow the user to add and update ICN's.

Field edits need to be added at the min for:

- Valid ICN;
- Claim not adjusted; and,
- Claim is in a paid status.

2.12.114.4 Clarifications
No associated clarifications found.

2.12.114.5 Associated Requirements

Requirement ID	Type
30.090.009.002.37	Financial A/R's

2.12.114.6 Associated System Objects

Technical Name	Object Type	Title
Fin.RollupArPanel.ascx	Panel	FARI AR Rollup Claims

2.12.114.7 Change Order Status

Status	Date
Change Order Written	03/22/2006
SE Assigned	07/19/2006
UAT Implemented	12/27/2006
Prod Implemented	05/23/2007

2.12.115 Update KY With NPI And Core Fix - 2218

Identifier	Type	Level	Subsystem	Computed	Estimated	Priority
2218	Change Order		Financial			1

2.12.115.1 Desired Solution
Move the CORE batch changes to KY this will include NPI changes.

2.12.115.2 Business Impact

2.12.115.3 Technical Specifications
Move the new code from CORE that relates to MO and NPI changes.

2.12.115.4 Clarifications
No associated clarifications found.

2.12.115.5 Associated Requirements

Requirement ID	Type
30.090.003.002.12B	RFP Split Requirement
30.090.003.002.28	Financial Payments
30.090.007.002.43	Claims Pricing
30.090.009.002.37	Financial A/R's
30.090.009.002.49	Financial Reporting
30.090.009.002.5	Financial RA's

2.12.115.6 Associated System Objects

Technical Name	Object Type	Title
finp_pymt_rev	Program	Estimated Payments Reports
finp_budg_main	Program	Financial Budget process
finp_updt_cash	Program	finp_updt_cash
FINJDPRE_PROV	Rhonda.Poston@ky.gov	Create Process Provider table
finp_pmt	Program	Financial Main Payment Process
finp_pmt_unld	Program	Check write Process table unload
finp_extractors	Program	financial claim extract
finp_updt_exp	Program	Update expenditure records

Technical Name	Object Type	Title
finp_RA	Program	Create checks and remittance advices
fin_histreader.sc	Program	fin_histreader.sc

2.12.115.7 Change Order Status

Status	Date
Change Order Written	03/30/2006
Ready for Model Office	04/10/2006
Model Office Implemented	04/15/2006
Ready for Model Office	06/28/2006
Model Office Implemented	06/30/2006
Ready for Model Office	06/30/2006
Ready for Model Office	07/11/2006
Model Office Implemented	08/04/2006
Ready for Model Office	08/04/2006
Ready for Model Office	09/26/2006
Ready for Model Office	11/06/2006
Ready for Model Office	11/16/2006
UAT Implemented	12/04/2006
Ready for Model Office	12/06/2006
Model Office Implemented	12/11/2006
Ready for Model Office	12/12/2006
UAT Implemented	12/12/2006
Ready for Model Office	12/13/2006
UAT Implemented	12/18/2006
Ready for Model Office	12/20/2006
UAT Implemented	12/22/2006
Ready for Model Office	01/03/2007
UAT Implemented	01/08/2007
Ready for Model Office	01/11/2007

Status	Date
UAT Implemented	01/11/2007
Ready for Model Office	01/22/2007
Ready for Model Office	01/23/2007
Prod Implemented	01/23/2007
Ready for Model Office	01/29/2007
UAT Implemented	02/01/2007
Prod Implemented	02/01/2007
UAT Implemented	02/01/2007
Prod Implemented	02/01/2007
Ready for Model Office	02/05/2007
Model Office Implemented	02/08/2007
UAT Implemented	02/09/2007
Prod Implemented	02/09/2007
Ready for Model Office	02/14/2007
Model Office Implemented	02/15/2007
UAT Implemented	02/16/2007
Prod Implemented	02/16/2007
Ready for Model Office	02/19/2007
Model Office Implemented	02/22/2007
UAT Implemented	02/22/2007
Prod Implemented	02/22/2007
Ready for Model Office	02/26/2007
Model Office Implemented	03/01/2007
UAT Implemented	03/01/2007
Prod Implemented	03/01/2007
Ready for Model Office	03/06/2007
Model Office Implemented	03/08/2007
UAT Implemented	03/08/2007
Prod Implemented	03/08/2007

Status	Date
Ready for Model Office	03/13/2007
Model Office Implemented	03/15/2007
UAT Implemented	03/15/2007
Prod Implemented	03/15/2007
Ready for Model Office	03/20/2007
Model Office Implemented	03/22/2007
UAT Implemented	03/22/2007
Prod Implemented	03/22/2007
Ready for Model Office	03/27/2007
Model Office Implemented	03/29/2007
UAT Implemented	03/29/2007
Prod Implemented	03/29/2007
Model Office Implemented	04/05/2007
UAT Implemented	04/05/2007
Prod Implemented	04/05/2007
Ready for Model Office	04/12/2007
Model Office Implemented	04/12/2007
UAT Implemented	04/12/2007
Prod Implemented	04/12/2007
Ready for Model Office	04/17/2007
Model Office Implemented	04/19/2007
UAT Implemented	04/19/2007
Prod Implemented	04/19/2007
Model Office Implemented	04/26/2007
UAT Implemented	04/26/2007
Prod Implemented	04/26/2007
Ready for Model Office	05/03/2007
Model Office Implemented	05/03/2007
UAT Implemented	05/03/2007

Status	Date
Prod Implemented	05/03/2007
Ready for Model Office	05/10/2007
Model Office Implemented	05/10/2007
UAT Implemented	05/10/2007
Prod Implemented	05/10/2007
Ready for Model Office	05/17/2007
Model Office Implemented	05/17/2007
UAT Implemented	05/17/2007
Prod Implemented	05/17/2007
Model Office Implemented	05/25/2007
UAT Implemented	05/25/2007
Prod Implemented	05/25/2007
Ready for Model Office	05/31/2007
Model Office Implemented	05/31/2007
UAT Implemented	05/31/2007
Prod Implemented	05/31/2007
Model Office Implemented	06/02/2007
UAT Implemented	06/02/2007
Prod Implemented	06/02/2007
Ready for Prod	06/06/2007
Ready for Model Office	06/07/2007
Model Office Implemented	06/07/2007
UAT Implemented	06/07/2007
Model Office Implemented	06/09/2007
UAT Implemented	06/09/2007
Prod Implemented	06/09/2007
Model Office Implemented	06/09/2007
UAT Implemented	06/09/2007
Prod Implemented	06/09/2007

Status	Date
Ready for Model Office	06/13/2007
Model Office Implemented	06/14/2007
UAT Implemented	06/14/2007
Ready for Model Office	06/21/2007
Model Office Implemented	06/25/2007
UAT Implemented	06/26/2007

2.12.116 Create KY Fund Code Rate Table - 2231

Identifier	Type	Level	Subsystem	Computed	Estimated	Priority
2231	Change Order		Financial			1

2.12.116.1 Desired Solution
There need to be a KY related table created to carry the State and Federal Reimbursement Rates.

2.12.116.2 Business Impact
Financial reporting in KY needs to be able to access historical FFP rate information.

2.12.116.3 Technical Specifications
Create a table to show the State and Federal reporting rates by fund code. This table must also have effective and end dates tied to each segment.

The table will include the following rows:

- SAK_FUND_CODE;
- DTE_EFFECTIVE;
- DTE_END;
- PCT_FED_RATE; and,
- PCT_STATE_RATE.

2.12.116.4 Clarifications
No associated clarifications found.

2.12.116.5 Associated Requirements

Requirement ID	Type
No associated Requirements found.	

2.12.116.6 Associated System Objects

Technical Name	Object Type	Title
No associated Change Orders found.		

2.12.116.7 Change Order Status

Status	Date
Change Order Written	04/04/2006
Ready for Model Office	04/17/2006
Model Office Implemented	05/22/2006
UAT Implemented	11/01/2006
Prod Implemented	05/23/2007

2.12.117 Check Information For AEVS - 2237

Identifier	Type	Level	Subsystem	Computed	Estimated	Priority
2237	Change Order		Financial			1

2.12.117.1 Desired Solution

The Kentucky Voice Response system allows the provider to check on payment information using there telephones. Financial needs to create the payment information that is used by the voice response system.

2.12.117.2 Business Impact

The payment information passed to the voice response system (VRS) is needed to provide the information to the providers.

2.12.117.3 Technical Specifications

The program evspymt.sc needs to be modified to meet the needs of the Kentucky VRS. The program also needs to be changed to use the new provider / payee formats.

2.12.117.4 Clarifications

No associated clarifications found.

2.12.117.5 Associated Requirements

Requirement ID	Type
No associated Requirements found.	

2.12.117.6 Associated System Objects

Technical Name	Object Type	Title
No associated Change Orders found.		

2.12.117.7 Change Order Status

Status	Date
Change Order Written	04/10/2006
SE Assigned	04/17/2006
Define/Analyze In Progress	04/18/2006
Technical Design In Progress (obsolete)	04/21/2006
Ready for Tech Walkthrough	04/25/2006
Construction in Progress	04/26/2006
Technical Design In Progress	04/28/2006

Status	Date
(obsolete)	
Unit Test in Progress (obsolete)	05/02/2006
Ready for Construction Wthru	05/04/2006
Ready for Model Office	05/05/2006
Model Office Implemented	06/10/2006
Ready for Model Office	10/20/2006
Model Office Implemented	10/27/2006
UAT Implemented	11/01/2006
Prod Implemented	05/23/2007

2.12.118 Change Index On t_acct_rec - 2334

Identifier	Type	Level	Subsystem	Computed	Estimated	Priority
2334	Change Order		Financial	2.00		1

2.12.118.1 Desired Solution
This is a Kentucky originated CO.

2.12.118.2 Business Impact
This change will allow for multiple combinations of fund codes and num_control_ar numbers.

2.12.118.3 Technical Specifications
Change the index on the sak_fund_cde and num_control_ar to non-unique.

2.12.118.4 Clarifications
No associated clarifications found.

2.12.118.5 Associated Requirements

Requirement ID	Type
No associated Requirements found.	

2.12.118.6 Associated System Objects

Technical Name	Object Type	Title
No associated Change Orders found.		

2.12.118.7 Change Order Status

Status	Date
Change Order Written	04/27/2006
Model Office Implemented	09/08/2006
UAT Implemented	11/01/2006
Prod Implemented	05/23/2007

2.12.119 Create Business Entity For Remit - 2394

Identifier	Type	Level	Subsystem	Computed	Estimated	Priority
2394	Change Order		Financial			1

2.12.119.1 Desired Solution

Since this is a Financial table, we need to use an interface file from the Financial Subsystem to get the sak_remit / RA number. Can you create a CO on your end to create a Business Entity / Config file / and Interface for this new table. Tied to Core CO 12160.

2.12.119.2 Business Impact

Meet the Commonwealth's business needs.

2.12.119.3 Technical Specifications

Create an interface file for T_FIN_REMIT and T_FIN_REMIT_XREF.

2.12.119.4 Clarifications

This CO had to be re-released because a problem was found with it. SE: Haydee Olivas.

2.12.119.5 Associated Requirements

Requirement ID	Type
No associated Requirements found.	

2.12.119.6 Associated System Objects

Technical Name	Object Type	Title
No associated Change Orders found.		

2.12.119.7 Change Order Status

Status	Date
Change Order Written	05/03/2006
SE Assigned	05/03/2006
Define/Analyze In Progress	05/03/2006
Ready for Model Office	05/15/2006
Model Office Implemented	09/20/2006
UAT Implemented	11/01/2006
Prod Implemented	05/23/2007
Prod Implemented	05/23/2007

2.12.120 Payee ID Links - 2488

Identifier	Type	Level	Subsystem	Computed	Estimated	Priority
2488	Change Order		Financial			

2.12.120.1 Desired Solution

The financial panels need to have the Payee Id linked to the appropriate entity. This CO is dependent upon Core Co 12319 to allow this type of process to be implemented.

2.12.120.2 Business Impact

2.12.120.3 Technical Specifications

Payee Id fields needs to be linked to the appropriate panel dependent on the Payee Type. If Payee Type = R, the Recipient Information Panel should be opened, if Payee Type= P, the Provider Information panels should be opened, The links need to be displayed in the following panels. AccountRecInformation.ascx CheckInformation.ascx Expenditure Information Summary, In data list CheckSearchPanel.ascx.

2.12.120.4 Clarifications

No associated clarifications found.

2.12.120.5 Associated Requirements

Requirement ID	Type
No associated Requirements found.	

2.12.120.6 Associated System Objects

Technical Name	Object Type	Title
No associated Change Orders found.		

2.12.120.7 Change Order Status

Status	Date
Change Order Written	05/11/2006
MO Testing in Progress	09/26/2006
MO Testing Complete	09/26/2006
Model Office Implemented	05/23/2007
UAT Implemented	05/23/2007
Prod Implemented	05/23/2007

2.12.121 Expenditure Base-Cost Sett - 2497

Identifier	Type	Level	Subsystem	Computed	Estimated	Priority
2497	Change Order		Financial			

2.12.121.1 Desired Solution

The Expenditure Base panel has the fields Cost Sett Year that need work. Derived from CO 0704. This CO will be completed upon completion of System Wide CO 11630.

2.12.121.2 Business Impact

Meet the Commonwealth's business needs.

2.12.121.3 Technical Specifications

This change needs to be made in the Expenditure Base Panel:

- File Name--ExpenditureBasePanel.ascx-The field Cost Sett Year has to be able to save to the database; and,
- The field name Cost Sett Year, needs to be removed from the Supplemental Panel after the Cost Sett Year is able to save from the Expenditure Base panel.

The same things need to happen in the AR Base Panel and AR Supplemental Panel.

2.12.121.4 Clarifications

No associated clarifications found.

2.12.121.5 Associated Requirements

Requirement ID	Type
No associated Requirements found.	

2.12.121.6 Associated System Objects

Technical Name	Object Type	Title
No associated Change Orders found.		

2.12.121.7 Change Order Status

Status	Date
Change Order Written	05/12/2006
SE Assigned	05/12/2006
Construction in Progress	07/11/2006
SE Assigned	08/15/2006
Construction in Progress	08/15/2006

Status	Date
Ready for Model Office	08/15/2006
Model Office Implemented	08/30/2006
MO Testing in Progress	09/26/2006
UAT Implemented	05/23/2007
Prod Implemented	05/23/2007

2.12.122 Expenditure Information -1099 In - 2498

Identifier	Type	Level	Subsystem	Computed	Estimated	Priority
2498	Change Order		Financial			

2.12.122.1 Desired Solution
The change derived from CO 0703. Involves the Expenditure Information Panel.

2.12.122.2 Business Impact
Meet the Commonwealth's business needs.

2.12.122.3 Technical Specifications
The field 1099 Indicator needs to be able to be displayed in the Information Panel and Expenditure Base Panel. Dependent upon KY Data model Change 2983.

2.12.122.4 Clarifications
No associated clarifications found.

2.12.122.5 Associated Requirements

Requirement ID	Type
No associated Requirements found.	

2.12.122.6 Associated System Objects

Technical Name	Object Type	Title
No associated Change Orders found.		

2.12.122.7 Change Order Status

Status	Date
Change Order Written	05/12/2006
SE Assigned	05/12/2006
SE Assigned	08/15/2006
Construction in Progress	08/15/2006
Ready for Model Office	08/15/2006
Model Office Implemented	08/30/2006
MO Testing in Progress	09/26/2006
MO Testing Complete	09/26/2006
UAT Implemented	05/23/2007
Prod Implemented	05/23/2007

2.12.123 Change The Common Extract To Mat - 2537

Identifier	Type	Level	Subsystem	Computed	Estimated	Priority
2537	Change Order		Financial			1

2.12.123.1 Desired Solution
Change the layout and recompile the related pgms.

2.12.123.2 Business Impact
The financial common extractor needs to match the table layouts for the check number.

2.12.123.3 Technical Specifications
PAY_TYPE - changing it in fl_common_extract.h rec.payee from long to char. CHECK_NUM - changing it in fl_common_extract.h rec.payee from long to char [9] change the name to NUM_CHECK.

This change affects following programs 1051 dsscsun0 /cust/test/base/src$ grep -l "rec.payee.check_num" f*.sc:

- finp_RA.sc;
- finp_pmt.sc;
- finp_reissues.sc;
- fnio_RA_835.sc; and,
- fnio_RA_writer.sc.

2.12.123.4 Clarifications
No associated clarifications found.

2.12.123.5 Associated Requirements

Requirement ID	Type
No associated Requirements found.	

2.12.123.6 Associated System Objects

Technical Name	Object Type	Title
No associated Change Orders found.		

2.12.123.7 Change Order Status

Status	Date
Change Order Written	05/15/2006
SE Assigned	05/31/2006

Status	Date
Ready for Model Office	05/31/2006
Model Office Implemented	06/02/2006
UAT Implemented	11/01/2006
Prod Implemented	05/23/2007

2.12.124 Add Tax ID To RA File - 2538

Identifier	Type	Level	Subsystem	Computed	Estimated	Priority
2538	Change Order		Financial			1

2.12.124.1 Desired Solution
"Add an identifier to the tax ID field so we can tell the difference" Between "an SSN" And "fien."

2.12.124.2 Business Impact
"Add an identifier to the tax ID field so we can tell the difference" Between "an SSN" And "fien."

2.12.124.3 Technical Specifications
Change the fl_ra_txn_rec.h layout to include the tax ID type on the type_payee_infro structure.

2.12.124.4 Clarifications
No associated clarifications found.

2.12.124.5 Associated Requirements

Requirement ID	Type
No associated Requirements found.	

2.12.124.6 Associated System Objects

Technical Name	Object Type	Title
No associated Change Orders found.		

2.12.124.7 Change Order Status

Status	Date
Change Order Written	05/15/2006
SE Assigned	05/31/2006
Ready for Model Office	05/31/2006
Model Office Implemented	06/02/2006
UAT Implemented	11/01/2006
Prod Implemented	05/23/2007

2.12.125 Convert CORE Reports To KY - 2612

Identifier	Type	Level	Subsystem	Computed	Estimated	Priority
2612	Change Order		Financial			1

2.12.125.1 Desired Solution
The batch CORE reports need to be converted back to the KY format.

2.12.125.2 Business Impact
Change the CORE reports back to the KY format.

2.12.125.3 Technical Specifications
Convert the report names and program names of the financial reports to the KY standard.

2.12.125.4 Clarifications
No associated clarifications found.

2.12.125.5 Associated Requirements

Requirement ID	Type
No associated Requirements found.	

2.12.125.6 Associated System Objects

Technical Name	Object Type	Title
No associated Change Orders found.		

2.12.125.7 Change Order Status

Status	Date
Construction in Progress	05/26/2006
Construction in Progress	06/02/2006
Ready for Model Office	06/08/2006
Model Office Implemented	06/16/2006
Ready for Model Office	06/20/2006
Model Office Implemented	06/26/2006
Ready for Model Office	07/05/2006
Model Office Implemented	07/07/2006
Ready for Model Office	07/25/2006
Model Office Implemented	08/14/2006

Status	Date
Ready for Model Office	09/25/2006
Ready for Model Office	10/02/2006
Model Office Implemented	10/13/2006
UAT Implemented	11/01/2006
Ready for Model Office	11/29/2006
Model Office Implemented	12/11/2006
UAT Implemented	12/12/2006
Prod Implemented	05/23/2007

2.12.126 Modify The 835 And 277 For KY - 2695

Identifier	Type	Level	Subsystem	Computed	Estimated	Priority
2695	Change Order		Financial			1

2.12.126.1 Desired Solution
The current 277 and 835 need to be modified to meet the specific needs of the KY system.

2.12.126.2 Business Impact
There are new fields that need to be added to the existing 277 and 835 layouts.

2.12.126.3 Technical Specifications
Modify the current 835 layout to match new layout which will include the following:

- hdr pmt record;
- cntl set num should be 9 bytes
  payment amt - 14 bytes;
- hdr payee grp;
- add payee provider ID type 2 bytes
  payee provider ID - 15 bytes;
- Claim Header Record;
- increase the amounts to 14 bytes
  add rend prov ID type - bytes
  rend prov ID - 15 bytes
  add drg code - 4 bytes add drg weight - 8 add prior auth number - 12 bytes;
- CLAIM Detail record;
- increase amounts to 14 bytes
  add rendering prov ID type - 3 bytes
  rendering prov ID - 15 bytes;
- Claim adjustment record;
- change logic to keep 6 segments rather than just one row.; and,
- financial txn record
  fin txn amount - 14 bytes.

2.12.126.4 Clarifications
Reassigned from Ramin to Trish Alexander 6/12/06.

2.12.126.5 Associated Requirements

Requirement ID	Type
No associated Requirements found.	

2.12.126.6 Associated System Objects

Technical Name	Object Type	Title
No associated Change Orders found.		

2.12.126.7 Change Order Status

Status	Date
Change Order Written	06/03/2006
SE Assigned	06/14/2006
Define/Analyze In Progress	06/14/2006
Construction in Progress	08/02/2006
Ready for Model Office	08/30/2006
Model Office Implemented	09/08/2006
UAT Implemented	11/01/2006
Prod Implemented	05/23/2007

2.12.127 Create T_FIN_NUM_COR - 2981

Identifier	Type	Level	Subsystem	Computed	Estimated	Priority
2981	Change Order		Financial			1

2.12.127.1 Desired Solution

The financial system needs to link transactions to scanned documents. This table will cross reference the docs with the financial transactions.

2.12.127.2 Business Impact

The financial system needs to link transactions to scanned documents. This table will cross reference the docs with the financial transactions.

2.12.127.3 Technical Specifications

Create a new table:

New table T_FIN_NUM_COR
- foreign Key sak_txn PK 1
- foreign Key cde_txn PK 2
- add num_cor VARCHAR [13] "This contains the reference number used to identify scanned documents."
- Conversion - No conversion needed load empty.

2.12.127.4 Clarifications

No associated clarifications found.

2.12.127.5 Associated Requirements

Requirement ID	Type
No associated Requirements found.	

2.12.127.6 Associated System Objects

Technical Name	Object Type	Title
No associated Change Orders found.		

2.12.127.7 Change Order Status

Status	Date
Construction in Progress	06/27/2006
Model Office Implemented	07/27/2006
UAT Implemented	11/01/2006
Prod Implemented	05/23/2007

2.12.128 Update Fin Schecd Tables - 2982

Identifier	Type	Level	Subsystem	Computed	Estimated	Priority
2982	Change Order		Financial			1

2.12.128.1 Desired Solution

The system needs to be able distinguish what processes the schedule will execute. These indicators will allow the user to determine at a schedule level weather a transaction is subject to holds or recoupments.

2.12.128.2 Business Impact

The system needs to be able distinguish what processes the schedule will execute. These indicators will allow the user to determine at a schedule level weather a transaction is subject to holds or recoupments.

2.12.128.3 Technical Specifications

Update the following tables:

Update existing table T_FIN_SCHEDULE
- add ind_AR_recoup CHAR "This field indicates if a schedule is to be included in the AR recoupment process."
- add ind_process_hold CHAR "This field indicates if a schedule is to be included in the payment hold and prudent pay process."
- add ind_process_liens CHAR "This field indicates if a schedule is to be included in the lien process."
- add ind_process_sanctions CHAR "This field indicates if a schedule is to be included in the sanction process."
- add ind_process_withholds CHAR "This field indicates if a schedule is to be included in the withholding process."
- Conversion - No conversion needed

Update existing table T_FIN_PROCESS_SCHED
- add ind_AR_recoup CHAR "This field indicates if a schedule is to be included in the AR recoupment process."
- add ind_process_hold CHAR "This field indicates if a schedule is to be included in the payment hold and prudent pay process."
- add ind_process_liens CHAR "This field indicates if a schedule is to be included in the lien process."
- add ind_process_sanctions CHAR "This field indicates if a schedule is to be included in the sanction process."
- add ind_process_withholds CHAR "This field indicates if a schedule is to be included in the withholding process."
- Conversion - No conversion needed.

2.12.128.4 Clarifications

No associated clarifications found.

2.12.128.5 Associated Requirements

Requirement ID	Type
No associated Requirements found.	

2.12.128.6 Associated System Objects

Technical Name	Object Type	Title
No associated Change Orders found.		

2.12.128.7 Change Order Status

Status	Date
Construction in Progress	06/27/2006
Model Office Implemented	07/27/2006
UAT Implemented	11/01/2006
Prod Implemented	05/23/2007

2.12.129 Update T_EXPENDITURE_SUPP_DTL - 2983

Identifier	Type	Level	Subsystem	Computed	Estimated	Priority
2983	Change Order		Financial			1

2.12.129.1 Desired Solution
We need to be able to identify if expenditure should be 1099 exempt.

2.12.129.2 Business Impact
We need to be able to identify if expenditure should be 1099 exempt.

2.12.129.3 Technical Specifications
Update the T_EXPENDITURE_SUPP_DTL table.

- Add ind_1099_exempt CHAR "This field indicates if the expenditure transaction is exempt from 1099 earnings calculations. If the value is 'Y' then the transaction is exempt."
- Conversion - No conversion needed.

2.12.129.4 Clarifications
No associated clarifications found.

2.12.129.5 Associated Requirements

Requirement ID	Type
No associated Requirements found.	

2.12.129.6 Associated System Objects

Technical Name	Object Type	Title
No associated Change Orders found.		

2.12.129.7 Change Order Status

Status	Date
Construction in Progress	06/27/2006
Ready for Construction Wthru	07/20/2006
Model Office Implemented	07/27/2006
UAT Implemented	11/01/2006
Prod Implemented	05/23/2007

2.12.130 Add Field For Document Tracking - 3031

Identifier	Type	Level	Subsystem	Computed	Estimated	Priority
3031	Change Order		Financial			1

2.12.130.1 Desired Solution

The financial UI panels need to allow the user to enter a document tracking number that will link to OnBase.

2.12.130.2 Business Impact

The financial UI panels need to allow the user to enter a document tracking number that will link to OnBase.

2.12.130.3 Technical Specifications

A new table has been added to carry the control number of the documents and the sak of the financial transaction. The table name is T_FIN_NUM_COR it has 3 fields sak_txn, cde_txn and num_cor. A new entry field 'Document Number' needs to be added to the cash, expenditure, AR, lien, and AR disp panels. The panels will do an insert into the T_FIN_NUM_COR table and move the sak of the current record into the sak_txn field and then based on the panel insert in the cde_txn field. AR = R, expenditure = S, liens = X, Cash = K, AR disp = Y. There also should be a hyper link from the displayed 'Document Number' to OnBase.

2.12.130.4 Clarifications

No associated clarifications found.

2.12.130.5 Associated Requirements

Requirement ID	Type
No associated Requirements found.	

2.12.130.6 Associated System Objects

Technical Name	Object Type	Title
No associated Change Orders found.		

2.12.130.7 Change Order Status

Status	Date
Change Order Written	07/03/2006
SE Assigned	08/21/2006
Construction in Progress	08/21/2006
Ready for Model Office	08/28/2006
Model Office Implemented	12/27/2006
UAT Implemented	05/23/2007
Prod Implemented	05/23/2007

2.12.131 Update Schedule Panel - 3032

Identifier	Type	Level	Subsystem	Computed	Estimated	Priority
3032	Change Order		Financial			1

2.12.131.1 Desired Solution
The financial schedule UI needs to add indicators to panels that will control how the schedules function.

2.12.131.2 Business Impact
The financial schedule UI needs to add indicators to panels that will control how the schedules function.

2.12.131.3 Technical Specifications
There were 5 new indicators added to the T_FIN_SCHEDULE these new fields need to have Y/N indicators added to the schedule panel. The panel also needs to update the table with the values. The field names should be as follows:

- 'Process AR's:' - ind_ar_recoup;
- 'Process Liens:' - ind_process_liens;
- 'Process Holds:' - ind_process_hold;
- 'Process Withholdings:' - ind_process_withholds; and,
- 'Process Sanctions:' - ind_process_sanctions.

There was also a cde flag that was added 'CDE_SCHED_TYPE' which should be a drop down with values of 'Medicaid' - M, 'KENPAC' - K,' Lockin' - L, and 'Demand' - D.

2.12.131.4 Clarifications
No associated clarifications found.

2.12.131.5 Associated Requirements

Requirement ID	Type
No associated Requirements found.	

2.12.131.6 Associated System Objects

Technical Name	Object Type	Title
No associated Change Orders found.		

2.12.131.7 Change Order Status

Status	Date
Change Order Written	07/03/2006
Ready for Model Office	08/06/2006
Model Office Implemented	08/30/2006
UAT Implemented	11/01/2006
Prod Implemented	05/23/2007

2.12.132 Support Schedule Changes - 3033

Identifier	Type	Level	Subsystem	Computed	Estimated	Priority
3033	Change Order		Financial			1

2.12.132.1 Desired Solution
Changes are needed to support the new schedule indicators.

2.12.132.2 Business Impact
Schedules need to be able to allow ARs, liens, holds and withholdings.

2.12.132.3 Technical Specifications
New indicators have been added to the schedule tables and these changes need to have code in batch to control what processes occur during a batch cycle.

Scheduler: add logic to pass the information from T_FIN_SCHEDULE to T_FIN_PROCESS_SCHED. Also make sure that AR's are added to a cycle if any schedule has ind_ar_recoup = Y. Holds: only hold/prudent pay a txn if the schedule has a 'Y' in the ind_process_hold.
liens/withhold/sanctions: only perform these if there is a 'Y' in the ind_process_lien, withhold, or sanction.

2.12.132.4 Clarifications
No associated clarifications found.

2.12.132.5 Associated Requirements

Requirement ID	Type
No associated Requirements found.	

2.12.132.6 Associated System Objects

Technical Name	Object Type	Title
No associated Change Orders found.		

2.12.132.7 Change Order Status

Status	Date
Change Order Written	07/03/2006
Construction in Progress	07/13/2006
Ready for Model Office	10/13/2006
Model Office Implemented	12/27/2006
UAT Implemented	05/23/2007
Prod Implemented	05/23/2007

2.12.133 AR Disposition Panel Links - 3106

Identifier	Type	Level	Subsystem	Computed	Estimated	Priority
3106	Change Order		Financial			

2.12.133.1 Desired Solution

KY needs the CCN and RA Number link. The Frame Work currently does not support the links for these two fields involve nested entities. A SW Core CO 13345 has been written to meet this need.

2.12.133.2 Business Impact

Meet the Commonwealth's business needs.

2.12.133.3 Technical Specifications

Make the CCN and RA number in the Data list links.

2.12.133.4 Clarifications

No associated clarifications found.

2.12.133.5 Associated Requirements

Requirement ID	Type
No associated Requirements found.	

2.12.133.6 Associated System Objects

Technical Name	Object Type	Title
No associated Change Orders found.		

2.12.133.7 Change Order Status

Status	Date
Change Order Written	07/11/2006
Model Office Implemented	05/23/2007
UAT Implemented	05/23/2007
Prod Implemented	05/23/2007

2.12.134 Modify The T_1099_ADJUST Table - 3107

Identifier	Type	Level	Subsystem	Computed	Estimated	Priority
3107	Change Order		Financial			1

2.12.134.1 Desired Solution

The T_1099_ADJUST table needs to have the payee_ID and cde_payee_type added so it will match the T_1099_DETAIL.

2.12.134.2 Business Impact

The T_1099_ADJUST table needs to have the payee_ID and cde_payee_type added so it will match the T_1099_DETAIL.

2.12.134.3 Technical Specifications

Update the T_1099_ADJUST table to include the following fields:

- Add sak_payee - Number 9;
- Add cde_payee_type - Char 1; and,
- See Clarifications for additional information.

2.12.134.4 Clarifications

To make the table unique we need to add a couple of fields:

- DTE_ADD - decimal 8 not null; and,
- SAK_SHORT - decimal 4 not null

The indexes on this table need to be added.

Primary unique Index should include:

- SAK_PAYEE;
- DTE_YEAR_ADJ; and,
- SAK_SHORT.

2.12.134.5 Associated Requirements

Requirement ID	Type
No associated Requirements found.	

2.12.134.6 Associated System Objects

Technical Name	Object Type	Title
No associated Change Orders found.		

2.12.134.7 Change Order Status

Status	Date

Status	Date
Change Order Written	07/11/2006
Ready for DM Review	08/02/2006
DM Review Board Approved	08/14/2006
Ready for Construction Wthru	08/14/2006
Ready for Model Office	09/01/2006
Model Office Implemented	09/08/2006
UAT Implemented	11/01/2006
Prod Implemented	05/23/2007

2.12.135 Lien Search Panel - 3129

Identifier	Type	Level	Subsystem	Computed	Estimated	Priority
3129	Change Order		Financial			

2.12.135.1 Desired Solution
KY does not need Withholding Reason Types in the Lien Search panel.

2.12.135.2 Business Impact
Meet the Commonwealth's business needs.

2.12.135.3 Technical Specifications
Remove withholding reason types from the LienSearchCriteria.cs.

2.12.135.4 Clarifications
No associated clarifications found.

2.12.135.5 Associated Requirements

Requirement ID	Type
No associated Requirements found.	

2.12.135.6 Associated System Objects

Technical Name	Object Type	Title
No associated Change Orders found.		

2.12.135.7 Change Order Status

Status	Date
Change Order Written	07/14/2006
SE Assigned	07/14/2006
Ready for Model Office	07/14/2006
UAT Implemented	02/19/2007
Prod Implemented	05/23/2007

2.12.136 Create 2 Impact Plus Fin Extract - 3146

Identifier	Type	Level	Subsystem	Computed	Estimated	Priority
3146	Change Order		Financial			1

2.12.136.1 Desired Solution

Create the impact plus extracts needed.

One is for DCBS and one is for DMHMR. They go to the Commonwealth mainframe where they are reviewed and then sent on to EMARS from their side.

2.12.136.2 Business Impact

These files are needed to continue financial operations.

2.12.136.3 Technical Specifications

Create the two files and send them to the output directory where the Commonwealth can pick them up.

The files should contain the following information:

01 WS-EXTRACT-RECORD;
05 S-TAX-ID PIC X (11);
05 S-TAX-ID-TYPE PIC X (01);
05 S-LEGAL-NAME PIC X (60);
05 S-AMOUNT-PAID PIC 9(08) V99;
05 S-RA-NUMBER PIC 9(6);
05 S-ADDRESS-LINE-1 PIC X (75);
05 S-ADDRESS-LINE-2 PIC X (75);
05 S-CITY PIC X (60);
05 S-STATE PIC X (02);
05 S-ZIP PIC X (10);
05 S-COUNTRY PIC X (03) VALUE SPACES; and,
05 FILLER PIC X (50) VALUE SPACES.
*

S-TAX-ID is from the provider master file field called W1200012-SUBCON-TAX-ID;
S-TAX-ID-TYPE is set to "1";
S-LEGAL-NAME is from provider master file field called W1200013-PROV-SORT-NAME; and,
The W1200012-PROV-CHECK-ADDR-IND is used to determine which address to move. It's an index value

We use the SMRYTRLR record from the claims processing (claims and financial transaction summary records)
If the record code is '66' and KY claim type is 'TK'.
If the bill-prov-type is 291 or 292 (first three bytes of provider number).
If claim-status = 'N' (paid).

MOVE N1416134-REMITTANCE-ADVICE-NO
TO S-RA-NUMBER.

```
IF N1416105-NET-CHECK-AMT NOT NUMERIC
OR
N1416105-NET-CHECK-AMT = 0
GO TO S230-999-EXIT
ELSE
MOVE N1416105-NET-CHECK-AMT TO S-AMOUNT-PAID
END-IF.
```

2.12.136.4 Clarifications

No associated clarifications found.

2.12.136.5 Associated Requirements

Requirement ID	Type
No associated Requirements found.	

2.12.136.6 Associated System Objects

Technical Name	Object Type	Title
No associated Change Orders found.		

2.12.136.7 Change Order Status

Status	Date
Change Order Written	07/20/2006
Construction in Progress	08/14/2006
Ready for Model Office	08/21/2006
Model Office Implemented	08/25/2006
UAT Implemented	11/01/2006
Ready for Model Office	02/26/2007
Model Office Implemented	03/01/2007
UAT Implemented	03/01/2007
Prod Implemented	03/01/2007

2.12.137 Promote CORE Fixes - 3159

Identifier	Type	Level	Subsystem	Computed	Estimated	Priority
3159	Change Order		Financial			1

2.12.137.1 Desired Solution
This CO will allow the developers to move CORE related changes to KY.

2.12.137.2 Business Impact
This CO will allow the developers to move CORE related changes to KY.

2.12.137.3 Technical Specifications
This CO will allow the developers to move CORE related changes to KY.

2.12.137.4 Clarifications
No associated clarifications found.

2.12.137.5 Associated Requirements

Requirement ID	Type
No associated Requirements found.	

2.12.137.6 Associated System Objects

Technical Name	Object Type	Title
No associated Change Orders found.		

2.12.137.7 Change Order Status

Status	Date
Ready for Model Office	07/24/2006
Ready for Model Office	08/15/2006
UAT Implemented	02/19/2007
Prod Implemented	05/23/2007

2.12.138 Modify The Prov Earnings Tables - 3173

Identifier	Type	Level	Subsystem	Computed	Estimated	Priority
3173	Change Order		Financial			1

2.12.138.1 Desired Solution

The T_PR_PROV_YTD_AMT and T_PR_YTD_HIST_AMT tables need to be modified to increase the size of the dollar fields and to add totals for mass adjust and capitation counts.

2.12.138.2 Business Impact

The database amount fields need to be expanded to carry larger dollar amounts and some reports need to be able to distinguish between reg adjustments and mass adjustments.

2.12.138.3 Technical Specifications

Make the following changes to both the T_PR_PROV_YTD_AMT and T_PR_YTD_HIST_AMT.

Add the following fields:

- AMT_PAID_TOT_MASS number 13 not null;
- CNT_CL_PD_MASS number 9 not null; and,
- CNT_CAP_PAID number 9 not null.

Also change all amount field to Number 13.

2.12.138.4 Clarifications

No associated clarifications found.

2.12.138.5 Associated Requirements

Requirement ID	Type
No associated Requirements found.	

2.12.138.6 Associated System Objects

Technical Name	Object Type	Title
No associated Change Orders found.		

2.12.138.7 Change Order Status

Status	Date
Change Order Written	07/26/2006
DM Review Board Approved	08/02/2006
Ready for Construction Wthru	08/08/2006

Status	Date
Ready for Model Office	09/01/2006
Model Office Implemented	09/08/2006
UAT Implemented	11/01/2006
Prod Implemented	05/23/2007

2.12.139 Add Additional Info To 835 Txn - 3483

Identifier	Type	Level	Subsystem	Computed	Estimated	Priority
3483	Change Order		Financial			1

2.12.139.1 Desired Solution
There are additional fields that need to be added to the 835 txn's.

2.12.139.2 Business Impact
The Commonwealth needs to have additional fields that exist in the legacy system.

2.12.139.3 Technical Specifications
Add the following fields to the 835 txn:

- Add MIA01, MIA04, MIA05 and MIA20 along with the corresponding MOA;
- Add 2100 REF segment; and,
- Add 2100 AMT field.

2.12.139.4 Clarifications
No associated clarifications found.

2.12.139.5 Associated Requirements

Requirement ID	Type
No associated Requirements found.	

2.12.139.6 Associated System Objects

Technical Name	Object Type	Title
No associated Change Orders found.		

2.12.139.7 Change Order Status

Status	Date
Construction in Progress	08/25/2006
Ready for Model Office	11/22/2006
Model Office Implemented	12/27/2006
UAT Implemented	05/23/2007
Prod Implemented	05/23/2007

2.12.140 Add Logic In Fin Batch For COS - 3495

Identifier	Type	Level	Subsystem	Computed	Estimated	Priority
3495	Change Order		Financial			1

2.12.140.1 Desired Solution

The financial batch code needs to add COS to AR's and expenditures.

2.12.140.2 Business Impact

2.12.140.3 Technical Specifications

Add logic to the financial batch process to assign the COS to AR's and expenditures. The Online will be adding the codes by using a dropdown so we don't need to worry about those in this CO. Use the COS rules process to get the COS value. The criteria to use are the fund code and type of txn.

2.12.140.4 Clarifications

No associated clarifications found.

2.12.140.5 Associated Requirements

Requirement ID	Type
No associated Requirements found.	

2.12.140.6 Associated System Objects

Technical Name	Object Type	Title
No associated Change Orders found.		

2.12.140.7 Change Order Status

Status	Date
Construction in Progress	08/28/2006
Ready for Model Office	09/01/2006
Model Office Implemented	09/07/2006
UAT Implemented	11/01/2006
Prod Implemented	05/23/2007

2.12.141 Move Fin Cycle To Related Data - 4363

Identifier	Type	Level	Subsystem	Computed	Estimated	Priority
4363	Change Order		Financial			1

2.12.141.1 Desired Solution
The fin cycle tab is not needed on the main panel since it should only be used to set up the system.

2.12.141.2 Business Impact
Don't have tabs for panels not being used.

2.12.141.3 Technical Specifications
Move the cycle panel to the related data page and comment out the budget panels since they will not be used.

2.12.141.4 Clarifications
No associated clarifications found.

2.12.141.5 Associated Requirements

Requirement ID	Type
No associated Requirements found.	

2.12.141.6 Associated System Objects

Technical Name	Object Type	Title
No associated Change Orders found.		

2.12.141.7 Change Order Status

Status	Date
Defect Identified	10/19/2006
Construction in Progress	10/24/2006
Ready for Model Office	10/24/2006
Model Office Implemented	12/27/2006
UAT Implemented	04/02/2007
Prod Implemented	05/23/2007

2.12.142 Add Index To Fin Tables - 4467

Identifier	Type	Level	Subsystem	Computed	Estimated	Priority
4467	Change Order		Financial			1

2.12.142.1 Desired Solution
There are several tables in Financial that are missing primary indexes. This CO will add indexes to those tables.

2.12.142.2 Business Impact
Meet the Commonwealth's business needs.

2.12.142.3 Technical Specifications
Add indexes to the following tables:

- T_AR_TXN_XREF;
- I_AR_TXN_XREF - SAK_ACCT_REC;
- T_EXPEND_TXN_XREF;
- I_EXPEND_TXN_XREF - SAK_EXPENDITURE;
- T_FIN_REMIT;
- I_FIN_REMIT_2 - CHECK_SAK;
- T_AR_ROLLUP; and,
- I_AR_ROLLUP - SAK_ACCT_REC.

2.12.142.4 Clarifications
No associated clarifications found.

2.12.142.5 Associated Requirements

Requirement ID	Type
No associated Requirements found.	

2.12.142.6 Associated System Objects

Technical Name	Object Type	Title
No associated Change Orders found.		

2.12.142.7 Change Order Status

Status	Date
Construction in Progress	10/25/2006
DM Review Board Approved	10/27/2006
Ready for UAT	04/03/2007
UAT Implemented	05/18/2007
Prod Implemented	05/23/2007

2.12.143 Update t_1099_adjust - 4831

Identifier	Type	Level	Subsystem	Computed	Estimated	Priority
4831	Change Order		Financial			1

2.12.143.1 Desired Solution
The T_1099_ADJUST table needs to have a unique index built and also two fields added.

2.12.143.2 Business Impact
These changes are required to meet the 1099 adjust panel needs.

2.12.143.3 Technical Specifications
Add the following fields:

- DTE_ADDED - not null; and,
- SAK_SHORT - not null.

Add the following unique primary index:

- Sak_payee;
- dte_year_adj; and,
- sak_short.

2.12.143.4 Clarifications
No associated clarifications found.

2.12.143.5 Associated Requirements

Requirement ID	Type
No associated Requirements found.	

2.12.143.6 Associated System Objects

Technical Name	Object Type	Title
No associated Change Orders found.		

2.12.143.7 Change Order Status

Status	Date
Construction in Progress	11/13/2006
DM Review Board Approved	11/13/2006
Ready for Construction Wthru	11/14/2006
Model Office Implemented	12/27/2006
Ready for UAT	04/03/2007
UAT Implemented	05/18/2007
Prod Implemented	05/23/2007

2.12.144 Add Index T_PR_PROV_YTD_AMT - 5807

Identifier	Type	Level	Subsystem	Computed	Estimated	Priority
5807	Change Order		Financial			1

2.12.144.1 Desired Solution

The T_PR_PROV_YTD_AMT table needs to have a primary index added.

2.12.144.2 Business Impact

The T_PR_PROV_YTD_AMT table needs to have a primary index added.

2.12.144.3 Technical Specifications

The T_PR_PROV_YTD_AMT table needs to have a primary index added.

The index should be unique on the following fields:

- PROV_BILLING;
- DTE_CYCLE; and,
- SAK_FIN_SCHED.

2.12.144.4 Clarifications

No associated clarifications found.

2.12.144.5 Associated Requirements

Requirement ID	Type
No associated Requirements found.	

2.12.144.6 Associated System Objects

Technical Name	Object Type	Title
No associated Change Orders found.		

2.12.144.7 Change Order Status

Status	Date
Change Order Written	01/15/2007
DM Review Board Approved	01/19/2007
Model Office Implemented	05/23/2007
UAT Implemented	05/23/2007
Prod Implemented	05/23/2007

2.12.145 Add 2nd idx t_fin_remit_txn_xef - 5979

Identifier	Type	Level	Subsystem	Computed	Estimated	Priority
5979	Change Order		Financial			1

2.12.145.1 Desired Solution

There needs to be a secondary index added to the T_FIN_REMIT_TXN_REF table the index should be non-unique on SAK_TXN.

2.12.145.2 Business Impact

To improve performance of batch and online.

2.12.145.3 Technical Specifications

To improve the performance on fin_277_process.sc adds a secondary index.
CREATE INDEX X_FIN_REMIT_TXN_XREF ON T_FIN_REMIT_TXN_XREF (SAK_TXN).

2.12.145.4 Clarifications

No associated clarifications found.

2.12.145.5 Associated Requirements

Requirement ID	Type
No associated Requirements found.	

2.12.145.6 Associated System Objects

Technical Name	Object Type	Title
No associated Change Orders found.		

2.12.145.7 Change Order Status

Status	Date
Change Order Written	01/22/2007
Model Office Implemented	05/23/2007
UAT Implemented	05/23/2007
Prod Implemented	05/23/2007

2.12.146 Cost Settlement Year (FYE Date) - 6774

Identifier	Type	Level	Subsystem	Computed	Estimated	Priority
6774	Change Order		Financial			2

2.12.146.1 Desired Solution

When creating Expenditure for Cost Settlements, an FYE, e.g. 12/31/2000, should be a required entry in the Cost Settlement Year field when the applicable Payout Reason Code "35" is entered into the Payout Reason field. Also it would be appropriate if the nomenclature of the information field titles was standardized for the FYE information in both the Expenditure Information Panel (Cost Sett Date) and the Base Information Panel (Cost Sett Year). The attached screen prints illustrate Expenditure for a Cost Settlement (reason code 35) can be created without entering an FYE date and the differences in the nomenclature for the titles of the field names of the two panels mentioned.

2.12.146.2 Business Impact

2.12.146.3 Technical Specifications

2.12.146.4 Clarifications

P. Conway Y.Murray no longer on KY and did not review with initiator, so I am setting back to defect identified.

2.12.146.5 Associated Requirements

Requirement ID	Type
No associated Requirements found.	

2.12.146.6 Associated System Objects

Technical Name	Object Type	Title
No associated Change Orders found.		

2.12.146.7 Change Order Status

Status	Date
Defect Identified	03/23/2007
Review With Initiator	03/26/2007
Defect Identified	04/19/2007
Defect Reviewed	04/27/2007
Model Office Implemented	05/23/2007
UAT Implemented	05/23/2007
Prod Implemented	05/23/2007

2.12.147 AR Base Info Panel missing PD Dt - 6832

Identifier	Type	Level	Subsystem	Computed	Estimated	Priority
6832	Change Order		Financial			2

2.12.147.1 Desired Solution

There is no where to enter the "Claim Paid Date". This will result in errors on the Refund Recovery Reports and Quarterly Fraud Reports (2827Q). This is how the system determines which FFP Period the recovery falls under and how much the Federal Match/State Share is on each refund. Talked to EDS test lead and they created a change order 6774 and advised that the Cost Sett Year field works in the same fashion. If so, then there should be some editing put into place to where it is a required field when entering an AR for a member. The CO is suggesting to rename the field to Cost Sett Year/Paid Date. Conversion team should be notified of this change to see what issues they may have in bringing the data to populate this field with the converted data.

2.12.147.2 Business Impact

2.12.147.3 Technical Specifications

2.12.147.4 Clarifications

PConway-CO 6774 was written to identify that the panel needed to have a multi-tag named field, but the CW wants to make sure that the conversion team is aware for what data to pull into the field for which type of AR.

2.12.147.5 Associated Requirements

Requirement ID	Type
No associated Requirements found.	

2.12.147.6 Associated System Objects

Technical Name	Object Type	Title
No associated Change Orders found.		

2.12.147.7 Change Order Status

Status	Date
Defect Identified	03/25/2007
Ready for Model Office	03/28/2007
Model Office Implemented	04/05/2007
UAT Implemented	04/05/2007
Prod Implemented	05/23/2007

2.12.148 Modify AR BASE INFO Panel - 6846

Identifier	Type	Level	Subsystem	Computed	Estimated	Priority
6846	Change Order		Financial			2

2.12.148.1 Desired Solution

MODIFY AR BASE INFO PANEL FOR MEMBER DATE DATA.

DUE TO MEMBER AR PROCESSING UTILIZING THE DATE-PAID BEING THE DATE THE MEMBER PAID MONIES BACK TO THE AR, THE AR BASE INFORMATION PANEL NEEDS TO REFLECT A FIELD TO DISPLAY THAT DATA. PLEASE MODIFY THE AR SEARCH RESULTS PANEL FIELD COST SETTLE FYE AND THE AR BASE INFORMATION PANEL FIELD COST SETT YEAR TO DISPLAY THE DATE PAID, COST SETTLE FYE/DATE PAID AND COST SETT YEAR/DATE PD. PLEASE MAKE SURE THE CONVERSION TEAM KNOWS THAT YOU DISPLAY THE COST SETFYE FOR PROVIDER A/Rs AND PAID CLMDTE FOR MEMBER A/Rs FROM LEGACY.

2.12.148.2 Business Impact

2.12.148.3 Technical Specifications

2.12.148.4 Clarifications

No associated clarifications found.

2.12.148.5 Associated Requirements

Requirement ID	Type
No associated Requirements found.	

2.12.148.6 Associated System Objects

Technical Name	Object Type	Title
No associated Change Orders found.		

2.12.148.7 Change Order Status

Status	Date
Change Order Written	03/25/2007
Model Office Implemented	05/23/2007
UAT Implemented	05/23/2007
Prod Implemented	05/23/2007

2.12.149 Escrow Checks RPT Incorrect. - 7035

Identifier	Type	Level	Subsystem	Computed	Estimated	Priority
7035	Change Order		Financial			1

2.12.149.1 Desired Solution

The escrow checks report is still having issues with the search functionality. It is also bringing incorrect data to the report and missing information/functionality (if multiple segments for one prov-ID should sub-total per segment, Grand total for all segments). Print screens have been provided for review. Issue Track # 125.

2.12.149.2 Business Impact

2.12.149.3 Technical Specifications

2.12.149.4 Clarifications

P. Conway - DMS and EDS staff to meet and define specifications for Financial SE. Per Darren Swift, the UI FINANCIAL-REPORTS&LETTER-ESCROW is only pulling for Escrow Check Status 1 and 10 and is working as defined for a short term fix until specs can be defined.

P.Conway-changed status to Defect Identified as agreed for GoLive.

2.12.149.5 Associated Requirements

Requirement ID	Type
No associated Requirements found.	

2.12.149.6 Associated System Objects

Technical Name	Object Type	Title
No associated Change Orders found.		

2.12.149.7 Change Order Status

Status	Date
Defect Identified	03/31/2007
Deferred	04/18/2007
Defect Identified	08/15/2007

2.12.150 Financial UI Changes - 7892

Identifier	Type	Level	Subsystem	Computed	Estimated	Priority
7892	Change Order		Financial			5

2.12.150.1 Desired Solution
This place holder Change order for changes that AR found in the base core code.

2.12.150.2 Business Impact
Financial online changes.

2.12.150.3 Technical Specifications
Below are the details of each change:

2.12.150.4 Clarifications
No associated clarifications found.

2.12.150.5 Associated Requirements

Requirement ID	Type
No associated Requirements found.	

2.12.150.6 Associated System Objects

Technical Name	Object Type	Title
No associated Change Orders found.		

2.12.150.7 Change Order Status

Status	Date
Ready for Model Office	05/09/2007
Model Office Implemented	05/10/2007
UAT Implemented	05/10/2007
Ready for Model Office	05/12/2007
Model Office Implemented	05/18/2007
UAT Implemented	05/18/2007
Ready for Model Office	05/22/2007
Prod Implemented	05/23/2007
Ready for Model Office	05/30/2007
Model Office Implemented	06/01/2007
UAT Implemented	06/01/2007
Prod Implemented	06/10/2007

2.12.151 REMOVE OIPL/ASGN BENEFIT TYPES - 8046

Identifier	Type	Level	Subsystem	Computed	Estimated	Priority
8046	Change Order		Financial			2

2.12.151.1 Desired Solution

PLEASE SUPPRES THE PRINTING ON REPORTS OR THE VISIBILITY OF BENEFIT TYPES = OIPL and ASGN from all of the Financial panels and reports. Per J. Bullock, this can be deferred till after go-live.

Also, delete the IDAHO values added during their use of UAT.

2.12.151.2 Business Impact

2.12.151.3 Technical Specifications

2.12.151.4 Clarifications

Closing this request as when GoLive version of report was verified, it was corrected.

2.12.151.5 Associated Requirements

Requirement ID	Type
No associated Requirements found.	

2.12.151.6 Associated System Objects

Technical Name	Object Type	Title
No associated Change Orders found.		

2.12.151.7 Change Order Status

Status	Date
Change Order Written	05/21/2007
Completed	08/23/2007
UAT Implemented	08/31/2007
Prod Implemented	08/31/2007

2.12.152 I3393-NF Pay Hold For June 07 - 8138

Identifier	Type	Level	Subsystem	Computed	Estimated	Priority
8138	Change Order		Financial			1

2.12.152.1 Desired Solution

Cash Management Initiative for Provider type 12 (June 2007).

2.12.152.2 Business Impact

2.12.152.3 Technical Specifications

2.12.152.4 Clarifications

All payments to Provider type 12 (Nursing facilities) will need to be held for the entire month of June 2007. The following providers have filed required documentation and are exempt from this initiative and will continue to receive uninterrupted reimbursements after each cycle:

1. Johnson Mathers (Provider #12500906);

2. Brighton Cornerstone Health Care (Provider #12504783);

3. James S. Taylor Memorial Home (Provider #12502126);

4. Garrard Convalescent Home MRS (Provider #12500955);

5. Garrard Convalescent Home, Inc. (Provider #12500948); and,

6. Highlands Nursing and Rehabilitation Center (Provider #12505186).

Per Neville Wise add two additional providers to this exclusion: Laurel Heights (12500815) Edgemont Healthcare (12502654).

No updates for this week.

P.Conway - Since the Prudent Pay segment has expired, this CO is now complete. Input was approved by Judy Bullock on 06/05/2007.

P.Conway-still waiting on DMS signoff.

P.Conway-still waiting on DMS signoff.

P.Conway-waiting on DMS signoff.

P.Conway-waiting on DMS signoff.

Received DMS signoff memo 2007DMS082107-526.

2.12.152.5 Associated Requirements

Requirement ID	Type
No associated Requirements found.	

2.12.152.6 Associated System Objects

Technical Name	Object Type	Title
No associated Change Orders found.		

2.12.152.7 Change Order Status

Status	Date
Change Order Written	05/29/2007
Assigned BA	05/29/2007
Completed	06/01/2007
Sign-Off Requested	07/20/2007
Prod Implemented	08/24/2007

2.12.153 I3412 - 8345

Identifier	Type	Level	Subsystem	Computed	Estimated	Priority
8345	Change Order		Financial			1

2.12.153.1 Desired Solution

Release Provider(s) from the 21-day Cash Management Initiative.

2.12.153.2 Business Impact

2.12.153.3 Technical Specifications

2.12.153.4 Clarifications

Waive Primary Care Centers of Eastern Kentucky Vicco (Provider) #35002039) and primary Care Centers of Eastern Kentucky Hindman (Provider #35002047) from the 21-day cash management initiative effective immediately. This will result in an immediate release of claims that have adjudicated. This is a temporary release and the provider(s) will need to be immediately placed back onto the 21-day initiative effective 07/30/2007.

No updates for this week.

All Prudent Pay still on HOLD until further notice.

P.CONWAY - no update.

No update.

Sign off requested.

Completion memo from the Commonwealth dated 09/12/07 was received by EDS 09/25/07.

2.12.153.5 Associated Requirements

Requirement ID	Type
No associated Requirements found.	

2.12.153.6 Associated System Objects

Technical Name	Object Type	Title
No associated Change Orders found.		

2.12.153.7 Change Order Status

Status	Date
Change Order Written	06/13/2007
Assigned BA	06/13/2007
On Hold	07/20/2007
Sign-Off Requested	08/28/2007
Completed	09/12/2007

2.12.154 I3418 Release PT17/33 Fr Prepay - 8395

Identifier	Type	Level	Subsystem	Computed	Estimated	Priority
8395	Change Order		Financial			1

2.12.154.1 Desired Solution

Release Provider(s) from the 21-day Cash Management Initiative.

2.12.154.2 Business Impact

2.12.154.3 Technical Specifications

2.12.154.4 Clarifications

Waive all SCL Providers (Provider Type 33) and ABI Providers (Provider Type 17) from the 21-day cash management initiative effective immediately. This will result in an immediate release of claims that have adjudicated. This is a temporary release and the provider(s) will need to be immediately placed back onto the 21-day initiative effective 06/25/2007.

No updates for this week.

P.Conway - As the End Date for this Prudent Pay has expired, this CO is complete.

P.Conway - still waiting on DMS sign off.

No Update.

P.Conway-waiting for DMS signoff.

P.Conway-waiting for DMS signoff.

Received DMS signoff memo 2007DMS082107-527.

2.12.154.5 Associated Requirements

Requirement ID	Type
No associated Requirements found.	

2.12.154.6 Associated System Objects

Technical Name	Object Type	Title
No associated Change Orders found.		

2.12.154.7 Change Order Status

Status	Date
Change Order Written	06/18/2007
Assigned BA	06/18/2007
Sign-Off Requested	07/20/2007
Prod Implemented	08/24/2007

2.12.155 I3419 Release PP Eff 6/15 - 8396

Identifier	Type	Level	Subsystem	Computed	Estimated	Priority
8396	Change Order		Financial			1

2.12.155.1 Desired Solution

Release Provider(s) from the 21-day Cash Management Initiative.

2.12.155.2 Business Impact

2.12.155.3 Technical Specifications

2.12.155.4 Clarifications

Waive Lifeskills Inc. (Provider #30604011; Provider #27004019; and Provider #28004018) from the 21-day cash management initiative effective immediately. This will result in an immediate release of claims that have adjudicated. This is a temporary release and the provider(s) will need to be immediately placed back onto the 21-day initiative effective 06/25/2007.

No updates for this week.

P.Conway - On hold until further notice for all Prudent Pay processing.

P.CONWAY - no update.

No update.

Sign off requested.

Completion memo from the Commonwealth dated 09/12/07 was received by EDS 09/25/07.

2.12.155.5 Associated Requirements

Requirement ID	Type
No associated Requirements found.	

2.12.155.6 Associated System Objects

Technical Name	Object Type	Title
No associated Change Orders found.		

2.12.155.7 Change Order Status

Status	Date
Change Order Written	06/18/2007
Assigned BA	06/18/2007
On Hold	07/20/2007
Sign-Off Requested	08/28/2007
Completed	09/12/2007

2.12.156 I3428 - 8524

Identifier	Type	Level	Subsystem	Computed	Estimated	Priority
8524	Change Order		Financial			1

2.12.156.1 Desired Solution

All Impact Plus providers are to be released from the 21 day hold until further notice. Per commissioner Glenn Jennings and Neville Wise.

2.12.156.2 Business Impact

2.12.156.3 Technical Specifications

2.12.156.4 Clarifications

This is the follow-up CO documenting the changes made to the 06/22/07 financial cycle.

Per email 6/29 no action until notified by DMS.

P.CONWAY - no update.

No update.

Sign off requested.

Completion memo from the Commonwealth dated 09/12/07 was received by EDS 09/25/07.

2.12.156.5 Associated Requirements

Requirement ID	Type
No associated Requirements found.	

2.12.156.6 Associated System Objects

Technical Name	Object Type	Title
No associated Change Orders found.		

2.12.156.7 Change Order Status

Status	Date
Change Order Written	06/27/2007
Assigned BA	06/27/2007
On Hold	07/20/2007
Sign-Off Requested	08/28/2007
Completed	09/12/2007

2.12.157 I3430-Rel All Provs From PP - 8534

Identifier	Type	Level	Subsystem	Computed	Estimated	Priority
8534	Change Order		Financial			1

2.12.157.1 Desired Solution

Release all providers from the 21 day Cash Management Initiative until further notice.

2.12.157.2 Business Impact

2.12.157.3 Technical Specifications

2.12.157.4 Clarifications

7/26-PConway This is a prudent pay CO that turned off Cash management until further notice.

P.CONWAY - no update.

No Update.

2.12.157.5 Associated Requirements

Requirement ID	Type
No associated Requirements found.	

2.12.157.6 Associated System Objects

Technical Name	Object Type	Title
No associated Change Orders found.		

2.12.157.7 Change Order Status

Status	Date
Change Order Written	06/28/2007
Assigned BA	06/28/2007
On Hold	06/29/2007

2.12.158 I3432 UI Query For Pru Pay - 8555

Identifier	Type	Level	Subsystem	Computed	Estimated	Priority
8555	Change Order		Financial			2

2.12.158.1 Desired Solution

Add feature to allow user to view claim count and amount Paid for a provider in a given cycle.

2.12.158.2 Business Impact

2.12.158.3 Technical Specifications

2.12.158.4 Clarifications

DMS Financial has the need to be able to view the number of claims and dollar amount that is to be release to a specific provider for a given cycle. #Example: If DMS Financial Management wants to know how many claims and the dollar amount that will be released from location 98 during a particular cycle, there should be a way to obtain this information. Currently we are able to search the claims and determine the number of adjudicated claims and the dollar amount for a particular provider, but we do not know which of these claims will pay the next cycle or the following cycle. DMS would like to have a way to search by desired provider number and the future cycle date. The results of the search should show the number of claims and amount to be paid that cycle from the claims that have adjudicated at the time of the search.

After discussion, this needs to be driven by the Financial staff. I believe we can make this a new panel on under FINANCIAL-REPORTS & LETTERS so that user can enter the PROVIDER ID and next cycle date, we calculate the ICNs that are in a PAID status but not released to Financial, and display back a count of ICNs and the PAID dollar amount. We would use the cycle date to determine if the ICN is = or greater than 19 days old, then it will be released from Location 98 and should pay in the next Financial cycle. Darren, Muhammad thinks you can use the SQL you wrote for him as a basis but change it to Provider Id and not Provider Type.

P.Conway - requested new due date of 07/31/2007 thru email.

P.Conway - Bonnie Feeback received extension approval from Steve Bechtel on 07/11/2007 to move date from 07/13/2007 to 08/15/2007.

P.CONWAY - no update.

P.Conway requested additional extension 8/13, Steve B approved an 8/24 due date on 8/14/2007.

No Update.

changed due to Release 2 date.

2.12.158.5 Associated Requirements

Requirement ID	Type
No associated Requirements found.	

2.12.158.6 Associated System Objects

Technical Name	Object Type	Title
No associated Change Orders found.		

2.12.158.7 Change Order Status

Status	Date
Change Order Written	07/02/2007
Assigned BA	07/02/2007
Extension Requested	07/10/2007
Extension Approved	07/11/2007
Assigned BA	07/17/2007
Ready for Construction Wthru	07/17/2007
Extension Requested	08/13/2007
Extension Approved	08/14/2007
Construction in Progress	08/31/2007
Ready for Model Office	09/18/2007
Model Office Implemented	09/18/2007
UAT Implemented	09/18/2007
Prod Implemented	10/31/2007

2.12.159 I3433-Fin Cycles 6/29 & 7/1 - 8556

Identifier	Type	Level	Subsystem	Computed	Estimated	Priority
8556	Change Order		Financial			1

2.12.159.1 Desired Solution
Processing of 6/29/07 Cycle.

2.12.159.2 Business Impact

2.12.159.3 Technical Specifications

2.12.159.4 Clarifications
ONLY process the Passport and Transportation portion of the cycle on 6/29/07. Process the remainder of the cycle on 7/1/07 with all prudent pay and pay hold logic turned off.

No updates for this week.

This was an update the PAY HOLD panel to turn off the logic for Prudent Pay and Pay Hold. In addition, SE had to modify cycle to only process specific transactions.

No update.

No Update.

Sign off requested.

Completion memo from the Commonwealth dated 09/12/07 was received by EDS 09/25/07.

2.12.159.5 Associated Requirements

Requirement ID	Type
No associated Requirements found.	

2.12.159.6 Associated System Objects

Technical Name	Object Type	Title
No associated Change Orders found.		

2.12.159.7 Change Order Status

Status	Date
Change Order Written	07/02/2007
Assigned BA	07/02/2007
On Hold	07/20/2007
Sign-Off Requested	08/28/2007
Completed	09/12/2007

2.12.160 I3437 Add PT15, 29 To FIN8055 - 8611

Identifier	Type	Level	Subsystem	Computed	Estimated	Priority
8611	Change Order		Financial			1

2.12.160.1 Desired Solution
To Add data to FIN-8055-W.

2.12.160.2 Business Impact

2.12.160.3 Technical Specifications

2.12.160.4 Clarifications
This Change Order is to add COS 16 (Impact Plus, PT29), 15 (HANDS< PT 15) and 17 (Specialized Children Services, PT 13) data to the FIN-8055-W for financial cycle balancing purposes.

The cycle report from 7/6/2007 did include these changes.

Testing approved by Jay Hackett on 7/16/2007.

The report changes are still currently running in prod override, waiting for SE to get the changes in a build.

No update.

Change order implemented 8/23/2007.

Sign-off memo submitted to the Commonwealth 08/29/07.

Completion memo from the Commonwealth dated 09/12/07 was received by EDS 09/25/07.

2.12.160.5 Associated Requirements

Requirement ID	Type
No associated Requirements found.	

2.12.160.6 Associated System Objects

Technical Name	Object Type	Title
No associated Change Orders found.		

2.12.160.7 Change Order Status

Status	Date
Change Order Written	07/03/2007
Assigned BA	07/06/2007
PROD Override	07/06/2007
Prod Implemented	08/23/2007
Sign-Off Requested	08/29/2007
Completed	09/12/2007

2.12.161 I3443 Ltr_DTE To Expend Panel - 8655

Identifier	Type	Level	Subsystem	Computed	Estimated	Priority
8655	Change Order		Financial			2

2.12.161.1 Desired Solution

Adding Letter date field to Expenditure Panel and Expenditure / AR Search Panels.

2.12.161.2 Business Impact

2.12.161.3 Technical Specifications

It should be located below the ADD DATE and updateable by the user.

The field should be edited to ensure that the user enters a valid date and in the correct date format. (For example we would not want alpha characters keyed into the field).

Do you want an edit to prevent entry of future dates?

The existing functionality of the Date eligible field is driven by the Add date of the expenditure; it needs to be changed to be driven by the letter date field.

The existing functionality is below one exception that is bolded.

Reason codes 33 and 34 should be set with a date eligible that will pay in the upcoming regular Friday cycle.

All other Payout Reason codes should set with a date eligible that will pay 30 days from the date entered by the user in the letter date field.

If the letter date entered is greater than 30 days then the date eligible should be set to pay in the upcoming regular Friday cycle.

2.12.161.4 Clarifications

Add a field for Letter Date to the Expenditure panel; it should be located below the Add date and un-dateable by the user. The field should be edited to ensure that the user enters a valid date and in the correct date format. (For example we would not want any alpha characters keyed into the field). There should also be an edit to prevent entry of future dates. Letter date should be included on the expenditure and A/R search panels and returned in the search results for both panels. The existing functionality of the Date eligible field is driven by the Add date of the expenditure; it needs to be changed to be driven by the letter date field. The existing functionality is as follows:

Reason codes 33 and 34 should be set with a date eligible that will pay in the upcoming regular Friday cycle - All other Payout Reason codes (excluding On-Demands) should be set with a date eligible that will pay 30 days from the date entered by the user in the letter date field. If there is no letter date, then it should pay 30 days from the date keyed into the system. - If the letter date keyed is greater than 30 days then the date eligible, the expenditure should be set to pay in the upcoming regular Friday cycle.

P.Conway - requested extension as this involves TPL batch changes and a database expansion for the new field.

P.Conway - extension granted per email from Kelli O'Brien to move date from 07/20/2007 to 08/10/2007.

P.CONWAY - no update.

P.Conway requested additional extension 8/10/2007, Steve B approved a 8/31/07 date on 8/14/2007.

No Update.

Changed due date to match defined Releases. This is Release 2.

Data Base modifications for new column. Need impact analysis.

There have not been any additional updates for this change order as it is waiting on placement on the priority list.

2.12.161.5 Associated Requirements

Requirement ID	Type
No associated Requirements found.	

2.12.161.6 Associated System Objects

Technical Name	Object Type	Title
No associated Change Orders found.		

2.12.161.7 Change Order Status

Status	Date
Change Order Written	07/09/2007
Assigned BA	07/09/2007
Assigned SE	07/09/2007
Extension Requested	07/17/2007
Extension Approved	07/17/2007

Status	Date
Ready for Construction Wthru	07/17/2007
Extension Requested	08/10/2007
Extension Approved	08/14/2007
Construction in Progress	08/31/2007

2.12.162 MemberID vs HIC On RA - 8747

Identifier	Type	Level	Subsystem	Computed	Estimated	Priority
8747	Change Order		Financial			2

2.12.162.1 Desired Solution

The FIN-8000 REMITTANCE ADVICE is reporting the electronically submitted Medicare ID as was told to move what was submitted on the claim and should be reporting the Legacy Original Medicaid ID.

2.12.162.2 Business Impact

2.12.162.3 Technical Specifications

2.12.162.4 Clarifications

P.Conway - Sandeep Kapoor approved on 07/17/2007.

2.12.162.5 Associated Requirements

Requirement ID	Type
No associated Requirements found.	

2.12.162.6 Associated System Objects

Technical Name	Object Type	Title
No associated Change Orders found.		

2.12.162.7 Change Order Status

Status	Date
Defect Identified	07/16/2007
SE Assigned	07/16/2007
Ready for Model Office	07/16/2007
MO Testing Complete	07/16/2007
Model Office Implemented	07/23/2007
UAT Implemented	07/23/2007
Prod Implemented	07/26/2007

2.12.163 I3455 - 8814

Identifier	Type	Level	Subsystem	Computed	Estimated	Priority
8814	Change Order		Financial			2

2.12.163.1 Desired Solution

Reasons for issue of Non-Provider Checks.

2.12.163.2 Business Impact

2.12.163.3 Technical Specifications

2.12.163.4 Clarifications

Please add the following reasons to the FIN-7550-W report. These should be populated in the "Reason for Issue" field. In identifying Non-Provider checks.

1. 25% Attorney Fee;

2. Acct. Closed, Estate;

3. Acct. Closed, Trust;

4. Acct. Closed, CS (Child Support);

5. Not a Medicaid member;

6. Carrier Requested Refund;

7. HIPP;

8. attorney Fee Issued From Prov. Refund; and,

9. Member Refund, No More Claims to Post To.

Requested an extension to 8/31/07 on 7/31/2007. It was approved by Jay Hackett on 8/1/2007.

Modify the tpl0700w.sc - insert a T_EXPEND_TXN_XREF.CDE_TXN of 'K' instead of 'C' per Financial TFAL.

Received the estimate from the SE, Analyzing and defining the programs to be changed.

After further analysis it was realized the FIN-7550-W would need to change. The Field on the report that is titled 'COS' should list out the Expenditure Reason code instead of the COS from the table. Demond Jones will be making the change to the report.

No change.

Testing for the FIN-7550-W was put into MO override and unit testing was successful.

Added supplemental documentation for the report change.

Testing sent to CW for review.

Sign-off memo dated 092607 was submitted to the Commonwealth 09/27/07.

2.12.163.5 Associated Requirements

Requirement ID	Type
10.060	RFP Requirement
30.090.009.003.1	Financial Reporting

2.12.163.6 Associated System Objects

Technical Name	Object Type	Title
TPLJM163_b	Rhonda.Poston@ky.gov	TPL Cost Recovery - Unload Denied Dental Claims

2.12.163.7 Change Order Status

Status	Date
Change Order Written	07/24/2007
Assigned BA	07/24/2007
Extension Requested	08/01/2007
Extension Approved	08/01/2007
SE Assigned	08/01/2007
Construction in Progress	08/11/2007
Ready for Tech Walkthrough	08/24/2007
Ready for Model Office	08/26/2007
Model Office Implemented	08/27/2007
UAT Implemented	08/27/2007
Prod Implemented	09/06/2007
Sign-Off Requested	09/26/2007

2.12.164 Identify Returned Capitation Cks - 8854

Identifier	Type	Level	Subsystem	Computed	Estimated	Priority
8854	Change Order		Financial			2

2.12.164.1 Desired Solution

When a capitation check was returned in Legacy, the capitation was treated as a claim and had a traceable TCN to identify it for the A/R/CCN and credit the correct provider and member capitation TRANSACTION. Currently any returned capitation check has no traceable way to identify the correct capitation and create the A/R/CCN. A tracking system for Managed Care needs to be created to identify returned capitation fees allowing Financial to create an A/R and credit the Managed Care capitation history record.

2.12.164.2 Business Impact

2.12.164.3 Technical Specifications

2.12.164.4 Clarifications

No associated clarifications found.

2.12.164.5 Associated Requirements

Requirement ID	Type
30.020.002	RFP Requirement
30.090.001.002.13A	RFP Split Requirement
30.090.009.002.27A	RFP Split Requirement

2.12.164.6 Associated System Objects

Technical Name	Object Type	Title
MC.RecipientCapitationHistoryPanel.ascx	Panel	Member Capitation History
A/R Info Base Panel	Panel	A/R Info Base Panel
MC.McPmpCapitationTxnPanel.ascx	Panel	PMP Capitation History

2.12.164.7 Change Order Status

Status	Date
Change Order Written	07/30/2007

2.12.165 New Field To t_expenditure Table - 8943

Identifier	Type	Level	Subsystem	Computed	Estimated	Priority
8943	Change Order		Financial			2

2.12.165.1 Desired Solution

ADD DTE_LETTER TO THE T_EXPENDITURE TABLE MM/DD/YYYY.

2.12.165.2 Business Impact

2.12.165.3 Technical Specifications

2.12.165.4 Clarifications

No associated clarifications found.

2.12.165.5 Associated Requirements

Requirement ID	Type
No associated Requirements found.	

2.12.165.6 Associated System Objects

Technical Name	Object Type	Title
No associated Change Orders found.		

2.12.165.7 Change Order Status

Status	Date
Change Order Written	08/10/2007
Ready for DM Review	08/10/2007
DM Review Board Approved	11/02/2007

2.12.166 I3480-OIG FIN Report Changes - 8972

Identifier	Type	Level	Subsystem	Computed	Estimated	Priority
8972	Change Order		Financial			2

2.12.166.1 Desired Solution

Changes in Financial reports utilized by the OIG staff.

2.12.166.2 Business Impact

2.12.166.3 Technical Specifications

2.12.166.4 Clarifications

1. We ask that Sapient (First Contract) (AC=51) and Healthwatch (Second Contract) (AC=52) be removed form the KYMC8080-R001 report.

2. Create new location codes for Desk Audit (DA); On-Site Audit (OA); Self Audit (SA); Algorithms (AL); and SURS system (SR) which will be used to differentiate SURS post payment review accounts.

3. In addition add a line to the 8080 report that reads "Less Payouts."

4. Need a new report similar to KYMC807E-R0.

5. Specs for KYMC807E-R01 accounts that are paid in full (have a zero balance) should drop off of report.

Email sent to the Commonwealth requesting a spec meeting.

Meeting held 8/20/07, there will be further specifications sent on the FIN-8080-M and the due date has changed to 1/8/2008.

2.12.166.5 Associated Requirements

Requirement ID	Type
No associated Requirements found.	

2.12.166.6 Associated System Objects

Technical Name	Object Type	Title
No associated Change Orders found.		

2.12.166.7 Change Order Status

Status	Date
Change Order Written	08/16/2007
Assigned BA	08/16/2007

2.12.167 DOD AR auto setup/letrs/process - 9014

Identifier	Type	Level	Subsystem	Computed	Estimated	Priority
9014	Change Order		Financial			2

2.12.167.1 Desired Solution

Legacy process for PKYC922R, PKYC920R, KYMC9404, KYMC9060, KYMC9062, KYMC9064, KYMC9030 NEED TO BE ADDED TO ICE FOR THE PROCESSING OF ARS RELATED TO A MEMBER'S DATE OF DEATH (DOD) AND READ PREVIOUS 6 MONTHS OF CLAIMS HISTORY FROM RUN DATE, IR YOU RUN IN SEPT, YOU WOULD BACK UP AND READ ALL CLAIMS SINCE MARCH TO RUN DATE TO SEE IF ANY OF THE CLAIMS HAVE A DATE OF SERVICE = OR > DOD, IF YES AND THEY SUMMED TOTAL PER PROVIDER > $100, THEN SET UP AN FINANCIAL AR, GENERATE LETTER FOR MMIS CLAIMS, AND CREATE OUTBOUND FILE AND LETTERS FOR PHARMACY CLAIMS (PBA).

2.12.167.2 Business Impact

2.12.167.3 Technical Specifications

2.12.167.4 Clarifications

Added CO5504 specs this CO is related to DCR 1122. Place a cap of = or > than $100.00 for all date of death ARs for PKYC9020R.

2.12.167.5 Associated Requirements

Requirement ID	Type
No associated Requirements found.	

2.12.167.6 Associated System Objects

Technical Name	Object Type	Title
No associated Change Orders found.		

2.12.167.7 Change Order Status

Status	Date
Defect Identified	08/20/2007
SE Assigned	08/20/2007
SE Assigned	08/20/2007
In Progress	09/24/2007

2.12.168 Create FIN8100W Report - 9028

Identifier	Type	Level	Subsystem	Computed	Estimated	Priority
9028	Change Order		Financial			2

2.12.168.1 Desired Solution

Report Name Remittance Activity Control Totals.
Report Number KYMC8100-R001.
Frequency PRIMARY FINANCIAL WEEKLYCYCLE.

Distribution Info.
Notes This report is assigned to the Financial subsystem instead of the Claims subsystem in the new Kentucky MMIS. --- JMB.
DSS - new report summary by request and provider number look for an example
Media Type INTERCHANGE and COLD.
Existing Subsystem Claims.
Assigned Subsystem Financial.

Date Status:
6/10/2005 5:37:32 PM Identified;
6/20/2005 4:35:34 PM Transferred; and,
9/19/2005 4:59:21 PM CO – Identified.

2.12.168.2 Business Impact

2.12.168.3 Technical Specifications

Remittance activity report.

1. Initialize connections;
2. Initialize report;
3. Gather data;
A. One transaction at a time;
B. Paid, Adj, and Denied; and,
4. Write onto output file.

2.12.168.4 Clarifications

Conducted tech walkthrough 9/24/07 Will be promoted to production on November 26th, 2007.

2.12.168.5 Associated Requirements

Requirement ID	Type
2930	Financial RA's

2.12.168.6 Associated System Objects

Technical Name	Object Type	Title
FIN8100W	Rhonda.Poston@ky.gov	Remittance Report
finp8100	Program	Remittance Report

2.12.168.7 Change Order Status

Status	Date
Change Order Written	08/22/2007
Define/Analyze In Progress	09/12/2007
Ready for Unit Test (obsolete)	09/12/2007
Ready for Construction Wthru	09/21/2007
Ready for Tech Walkthrough	09/24/2007
Ready for Prod	11/26/2007

2.12.169 Add RA/CK Num to Conv Cl Cr ARs - 9043

Identifier	Type	Level	Subsystem	Computed	Estimated	Priority
9043	Change Order		Financial			3

2.12.169.1 Desired Solution

Add RA and CK Num to Converted Claim Credit ARs.

2.12.169.2 Business Impact

2.12.169.3 Technical Specifications

2.12.169.4 Clarifications

The CW would like post-conversion research and a potential update to take place to back-fill the payment number and RA date by matching cycle dates to the payment files. See CTRW Feedback for financial Detail Scan. 5 test case 5 for documentation of the request. This information is posted to the PWB under Conversion, Conversion Testing Results, and Feedback.

2.12.169.5 Associated Requirements

Requirement ID	Type
No associated Requirements found.	

2.12.169.6 Associated System Objects

Technical Name	Object Type	Title
No associated Change Orders found.		

2.12.169.7 Change Order Status

Status	Date
Change Order Written	08/23/2007

2.12.170 finp_extractor for suspended ICN - 9104

Identifier	Type	Level	Subsystem	Computed	Estimated	Priority
9104	Change Order		Financial			1

2.12.170.1 Desired Solution

Modify the main Financial job so that the num of days in the cycle is = 7 (parm date for cycle Friday - Sat +1=7) and the days_suspended = greater than 0, zero and ICN status = SUSPEND or RECYCLE.

2.12.170.2 Business Impact

2.12.170.3 Technical Specifications

2.12.170.4 Clarifications

No associated clarifications found.

2.12.170.5 Associated Requirements

Requirement ID	Type
30.010.010	RFP Requirement
30.090.001.003.1A	RFP Split Requirement
30.090.009.001.1	Financial Adjustments
30.090.009.001.4	Financial Adjustments
30.090.009.002.1	Financial Payments
30.090.009.002.14	Financial Adjustments
30.090.009.002.15	Financial Adjustments

2.12.170.6 Associated System Objects

Technical Name	Object Type	Title
finp_extractors	Program	financial claim extract

2.12.170.7 Change Order Status

Status	Date
Change Order Written	08/29/2007
SE Assigned	08/29/2007

2.12.171 RA Modify Address Page Print - 9125

Identifier	Type	Level	Subsystem	Computed	Estimated	Priority
9125	Change Order		Financial			1

2.12.171.1 Desired Solution

Modify the ADDRESS PAGE of the REMITTANCE ADVICE so that the font is larger and in bold for the post office scanners.

2.12.171.2 Business Impact

2.12.171.3 Technical Specifications

2.12.171.4 Clarifications

Per Bob Nowell, Post Office has requested that we bold and if possible larger font for the address page of the RA for their scanners to read to help alleviate the number of unable to deliver RAs being returned to EDS.

2.12.171.5 Associated Requirements

Requirement ID	Type
No associated Requirements found.	

2.12.171.6 Associated System Objects

Technical Name	Object Type	Title
No associated Change Orders found.		

2.12.171.7 Change Order Status

Status	Date
Change Order Written	08/30/2007
SE Assigned	08/30/2007

2.12.172 Modify FIN Outbound For Warrant - 9161

Identifier	Type	Level	Subsystem	Computed	Estimated	Priority
9161	Change Order		Financial			1

2.12.172.1 Desired Solution

Currently the 2 data files get moved to an FTP directory where they are automatically pulled across to KAMES. After discussing this with Charles, we decided we could change the job script to move them to a directory one step below where they need to be. This way they will not be pulled automatically and will also be a quick change to the script which can go into override and be ready for this weekend. We can then create another job script to move the data to the correct directory at a later time. The new script does not have to be completed by this weekend. We can manually move the files until we get it all the coding and scheduling complete. The data currently goes to /export/ftp/prod/financial/outbound/kames. The change will send it to /export/ftp/prod/financial/outbound.

2.12.172.2 Business Impact

2.12.172.3 Technical Specifications

2.12.172.4 Clarifications

Put on Hold per Neville Wise

2.12.172.5 Associated Requirements

Requirement ID	Type
30.110.009.012	Financial Payments

2.12.172.6 Associated System Objects

Technical Name	Object Type	Title
No associated Change Orders found.		

2.12.172.7 Change Order Status

Status	Date
Change Order Written	09/07/2007
Assigned SE	09/07/2007
On Hold	09/07/2007

2.12.173 Modify Warrant Void Process - 9164

Identifier	Type	Level	Subsystem	Computed	Estimated	Priority
9164	Change Order		Financial			1

2.12.173.1 Desired Solution

Please modify the current Warrant VOID process so that when the FINANCIAL - PAY-STOP/VOID/REISSUE is initiated on a physical warrant check received by the Financial unit, the user can open the base panel and enter the actual CCN assigned and imaged for tracking and auditing. All other process may remain the same, i.e. create the CCN disposition to zero out the balance, create related transaction = the ICNs being voided due to the returned warrant check and the mass adj void (Region 54) for each Paid ICN is processed in the claims engine along with the reversal of any Financial Transaction that may have been processed on the Remittance Advice for that warrant void.

Correct not updating the t_cash_receipt_disp_xref table for related transaction information.

Not creating the REGION 54 claims to correspond with the void.

Change transaction posited indicator = NO when crating transaction.

2.12.173.2 Business Impact

9/7/07-there is currently 607 + warrant void checks sitting in inventory that are unworkable by the Fin Unit.

2.12.173.3 Technical Specifications

2.12.173.4 Clarifications

Unit test reviewed. I have approved with the note that the display of the CCN as the SAK value will be added to existing defect 8128 for future fix.

Expand the display for the RA Number field in the Base Information panel. Cuts off the last digit.

2.12.173.5 Associated Requirements

Requirement ID	Type
30.090.009.003.1	Financial Reporting

2.12.173.6 Associated System Objects

Technical Name	Object Type	Title
Fin.FPI Base Information.ascx - base	Panel	FPI Base Information

2.12.173.7 Change Order Status

Status	Date
Change Order Written	09/07/2007
Assigned SE	10/17/2007
Construction in Progress	10/18/2007
Ready for Construction Wthru	10/24/2007
Ready for UAT	11/06/2007
Ready for Model Office	11/06/2007
UAT Implemented	11/06/2007
UAT Testing in Progress	11/07/2007

2.12.174 I3524-RRR add RSN CD 22 - 9339

Identifier	Type	Level	Subsystem	Computed	Estimated	Priority
9339	Change Order		Financial			1

2.12.174.1 Desired Solution

RRR (FIN 2913 & 2923) columns need to be corrected.

2.12.174.2 Business Impact

2.12.174.3 Technical Specifications

2.12.174.4 Clarifications

See attached e-mail correspondence. FIN 2913 and 2923 (Refund Recovery Reports) need column headings and "bucketing" corrected. DMS made an error when forwarding specs to the BA. Follow information on 3/17/06 e-mail to Darren Swift. AR reason code 22 transactions should be listed in a column separately as CMP.

Although reason code 22 is state share only and there is a column for that, these collections have to be reported separately so General Accounting staff can identify CMP funds to transfer to IIG. Federal rules specify that all CMP funds have to be transferred to OIG. DMS is not allowed to retain any CMP collections.

2.12.174.5 Associated Requirements

Requirement ID	Type
30.090.009.003.1	Financial Reporting

2.12.174.6 Associated System Objects

Technical Name	Object Type	Title
finp2913	Program	TPL Refund - Recovery Financial Report (Summary)

2.12.174.7 Change Order Status

Status	Date
Change Order Written	09/27/2007
Assigned BA	09/27/2007
Assigned SE	09/27/2007
Review With Initiator	09/27/2007
Model Office Implemented	11/20/2007

Status	Date
UAT Implemented	11/20/2007
Ready for Prod	11/20/2007
Prod Implemented	11/26/2007

2.12.175 I3580 - RA CHANGES - 9490

Identifier	Type	Level	Subsystem	Computed	Estimated	Priority
9490	Change Order		Financial			1

2.12.175.1 Desired Solution

TO REVISE THE ICE GENERATED RA'S SO THEY BECOME USEFUL TO THE PROVIDER COMMUNITY, EDS AND INTERNAL MEDICAID STAFF. THIS CHANGE WILL DECREASE PR CALL VOLUMES AND PROVIDER VISITS.

2.12.175.2 Business Impact

2.12.175.3 Technical Specifications

2.12.175.4 Clarifications

BASED ON MEETINGS HELD WITH CW AND EDS STAFF THE FOLLOWING CHANGES ARE REQUIRED ON THE REMITTANCE ADVICES:

1. ADD SUFFICIENT SPACING BETWEEN EACH CLAIM;

2. SET UP PAGE BREAKS SO THAT EACH PAGE ENDS IN A COMPLETE CLAIM PER MEMBER RATHER THAN FLOW TO THE NEXT PAGE AND RUN INTO A NEW MEMBERS CLAIM;

3. REMOVE THE LVL CARE AND REPLACE IT WITH THE ACTUAL DRG NUMBER/CODE;

4. REMOVE THE BSN NUMBER;

5. WHEN MEDICARE HIC NUMBER IS DISPLAYED, ALSO SHOW THE MEDICAID MEMBER ID NUMBER;

6. REMOVE THE HIPAA EOB'S;

7. SHOW THE APPROPRIATE EOB WITH THE CORRECT DESCRIPTION ON ALL CLAIMS. POST REPEATED EOB'S ONCE PER CLAIM;

8. HEADER BILLED AMOUNT NEEDS TO BE MOVED TO THE RIGHT;

9. PRINT THE ENTIRE FIRST AND LAST NAME OF THE MEMBER AND THE ASSOCIATED ACCOUNT NUMBER BILLED BY THE PROVIDER;

10. PRODUCE EOB TO IDENTIFY RECOUPED CLAIMS;

11. FOR CODES THAT ARE BUNDLED, THE ORIGINAL BILLED CODES SHOULD ALSO BE VISIBLE WITH THE CODE THEY WERE BUNDLED TO;

12. MEMBER ID SHOULD BE LISTED TO HELP IDENTIFY ASSOCIATED RECOUPMENTS;

13. ADD RENDERING PROVIDER NAME ABOVE THE RENDERING PROVIDER NUMBER;

14. ADD TOTAL NUMBER OF UNITS ALONG WITH THE TOTAL DOLLAR AMOUNT PER CLAIM;

15. APPROPRIATE EOB SHOULD BE DISPLAYED WHEN A CLAIM IS IN A PAID STATUS WITH PAYMENT OF AMOUNT OF ZERO. PROVIDERS NEED PROOF THIS IS A PAID CLAIM;

16. CHANGE THE ADJUSTMENT SECTION OF RA SO THAT IT MIRRORS THE LEGACY VERSION;

17. ERROR CODES DO NOT REFLECT THE LINE ITEM THEY ARE RELATED TO; ASSOCIATE THEM TO THE APPROPRIATE LINE ITEM;

18. Received DMS specification change to report the RELATED HISTORY for ICNs denied for duplicate. See email; and,

19. report Employee IDs for PT30 CMH THE ABOVE ISSUES ARE CAUSING GREAT STRESS TO THE PROVIDER COMMUNITY. THE OVERALL RECOMMENDATION IS THAT THE CURRENT RA FORMAT BE CHANGED SO THAT IT REFLECTS THE LEGACY REMITTANCE ADVICE LAYOUT AS MUCH AS POSSIBLE.

Add Defect 8531 - The Remittance Advice is not reporting all the EOB's associated to the denied claims listed within the same RA. This is preventing the provider from understanding why some of their claims denied. Issue Tracking # 600.

Received DMS specification change to report the RELATED HISTORY for ICNs denied for duplicate. See email.

Per Karen Sayles add addendum for reporting the PT 30 CMH Employee ID to the RA output.

2.12.175.5 Associated Requirements

Requirement ID	Type
No associated Requirements found.	

2.12.175.6 Associated System Objects

Technical Name	Object Type	Title
No associated Change Orders found.		

2.12.175.7 Change Order Status

Status	Date
Change Order Written	10/09/2007
Assigned BA	10/09/2007

Status	Date
Assigned SE	11/05/2007
Construction in Progress	11/05/2007

2.13 Data Element Dictionary

Because of the length of some column names and the use of underscore characters, some names in the tables below may wrap to the next line.T_1099_ADJUST

This table is used to make 1099 adjustments for a tax ID. Only one adjustment per tax ID is allowed per year.

Column Name	Description	Type	Length	Precision	Primary Key
SAK_PAYEE	System assigned key that uniquely identifies the a payee in the MMIS system./sak_payee	NUMBER	9	0	Y
DTE_YEAR_ADJ	This is the tax year that is being adjusted.	NUMBER	4	0	Y
SAK_SHORT	This field is used to uniquely identify row entered on the same day	NUMBER	4	0	Y
NUM_TAX_ID	This is the tax ID that is being adjusted.	CHAR	9	0	N
CDE_PAYEE_TYPE	Unique char value for payee types defined within financial.	CHAR	1	0	N
CDE_1099_ADJ_RSN	This is the reason code for the 1099 adjustments.	CHAR	2	0	N
AT_FICA_ADJ	This is amount that the FICA was adjusted.	NUMBER	10	2	N
AT_BACKUP_WHD_ADJ	This is the amount that the backup withholding is being adjusted by.	NUMBER	10	2	N
AT_TT_EARN_ADJ	This is the amount that the earnings is being adjusted by. This amount can be using to increase or decrease earnings.	NUMBER	10	2	N
DTE_ADDED	The date the adjustment was entered.	NUMBER	8	0	N

2.13.1 T_1099_ADJ_REASON

This is the reason code table for all the 1099 adjustment reason codes.

Column Name	Description	Type	Length	Precision	Primary Key
CDE_1099_ADJ_RSN	This is the reason code for the 1099 adjustments.	CHAR	2	0	Y

Column Name	Description	Type	Length	Precision	Primary Key
DSC_1099_ADJ_RSN	This is the description text of the 1099 adjustment reason.	CHAR	50	0	N

2.13.2 T_1099_DETAIL

This table contains the individual line items that went into the producing the 1099's.

Column Name	Description	Type	Length	Precision	Primary Key
NUM_TAX_ID	This is the tax identification number assigned to a provider by the Internal Revenue Service.	CHAR	9	0	Y
SAK_SHOT_1099_DSC	This is the system-assigned internal key that is 2 bytes long. It is used to uniquely identify a row without using updateable attributes.	NUMBER	9	0	Y
CDE_PAYEE_TYPE	Unique char value for payee types defined within financial.	CHAR	1	0	Y
SAK_PAYEE	This is the unique system assigned key associated with the payee for this transaction. It contains the sak of various entities such as sak_prov_loc, sak_recip, sak_carrier, and so on..	NUMBER	9	0	Y
DTE_CYCLE	The cycle date this 1099 record was last updated on.	NUMBER	8	0	Y
TOTAL_AT_PAID	The amount paid to an individual provider during the current year.	NUMBER	11	2	N
AT_CHCK_MANUAL	The amount paid to an individual provider outside of the weekly financial cycle.	NUMBER	10	2	N
AT_CLM_REFUND	Amount returned from an individual provider for claims that had previously been overpaid.	NUMBER	10	2	N
AT_NONCLM_REFUND	Amount returned from an individual provider for a reason other than overpayment of claims.	NUMBER	10	2	N

Column Name	Description	Type	Length	Precision	Primary Key
AT_CHCK_VOID	The amount an individual provider's 1099 is credited for due to a check that has never been cashed.	NUMBER	10	2	N
AT_FICA	This is the amount of FICA paid for this detail payment record.	NUMBER	10	2	N
AT_BACKUP_WHOLD	This is the amount of backup withholding on this record.	NUMBER	10	2	N
IND_REPOT_TYPE	This is the type of federal reporting that this went through. If it is for1099 the value is '1'. If it is for W2 it will be a 'W'.	CHAR	1	0	N

2.13.3 T_835_CONSTANTS

This table contains the 835 State specific information.

Column Name	Description	Type	Length	Precision	Primary Key
ID_SENDER_ST	This is the sender ID of the State.	CHAR	10	0	Y
NUM_ABA_ST	This is the State's ABA Bank number.	CHAR	12	0	N
NUM_ACT_ST	This is the State's bank account number.	CHAR	35	0	N
NUM_TAX_ID_ST	This is the State's federal tax ID.	CHAR	10	0	N
NAM_PAYER_ST	This is the name that the State will be identified by on the 835 records.	CHAR	60	0	N
ADR1_RETURN_ST	This is the first line of the State's return address.	CHAR	55	0	N
ADR2_RETURN_ST	This is the second line of the State's return address.	CHAR	55	0	N
CITY_RETURN_ST	This is the city of the State's return address.	CHAR	30	0	N
STATE_RETURN_ST	This is the state code of the State's return address.	CHAR	2	0	N
ZIP_RETURN_ST	This is the zip code of the State's return address.	CHAR	15	0	N
NUM_NATL_PLAN_ST	This is the State's National Plan number.	CHAR	80	0	N

2.13.4 T_835_CONTACTS

This table contains the contact information for 835 inquires by provider type. ZZ will be the default provider type.

Column Name	Description	Type	Length	Precision	Primary Key
SAK_FIN_CYCLE	The system assigned key that identifies a unique financial cycle within interChange.	NUMBER	9	0	Y
CDE_PROV_TYPE	Type that a provider is licensed for.	CHAR	2	0	N
NAM_CONTACT	This is the name of the contact at MMIS that will be reported on the 835.	CHAR	60	0	N
NUM_PHONE1	This is the phone number one on the MMIS contact.	CHAR	80	0	N
NUM_PHONE2	This is the phone number two on the MMIS contact.	CHAR	80	0	N

2.13.5 T_ACT_REC

The accounts receivables are setup here when the system needs to recoup funds from a provider's claim payments and expenditures.

Column Name	Description	Type	Length	Precision	Primary Key
SAK_ACT_REC	System assigned key to the accounts receivable.	NUMBER	9	0	Y
NUM_CONTROL_AR	Unique number assigned to track accounts receivables.**T**his number will be used to file any documentation related to the accounts receivable.**T**his is often the same as sak_acT_rec.	CHAR	13	0	N
DTE_EFFECTIVE	Date the accounts receivable will take effect.**T**his date will usually be the same as the date added, but it allows the accounts receivable recoupment process to be delayed until a future date.	NUMBER	8	0	N
DTE_ADDED	Date the accounts receivable was created.**T**his date will be used in determining the age of the accounts receivable.	NUMBER	8	0	N

Column Name	Description	Type	Length	Precision	Primary Key
AT_SETUP	The original amount of the accounts receivable to be collected from a provider.	NUMBER	13	2	N
AT_MAX_RECOUP_AR	The maximum amount of the account receivable that can be recouped in a payment cycle.	NUMBER	13	2	N
PT_RECOUP	The maximum percentage of the account receivable that can be recouped in a payment cycle.	NUMBER	4	2	N
IND_STATUS	The status indicates whether the A/R is "Active" (A) or "Closed" (C). An A/R is closed when it has been fully recovered. Only a Void can reopen a closed A/R.	CHAR	1	0	N
CDE_RECOUP_TYPE	Indicates the type of recoupment that will be processed on the AR. ("A" = Automatic\system recoupment, "M" = Manual recoupment, "R" = Repayment).	CHAR	1	0	N
SAK_SHOT_COS	A system assigned key (SAK) classifying a rule that qualifies a COS.	NUMBER	4	0	N
SAK_PAYEE	System assigned key that uniquely identifies a payee in the MMIS.	NUMBER	9	0	N
SAK_FUND_CODE	This is the unique system assigned key to the Financial Fund Codes.	NUMBER	9	0	N
CDE_REASON_FOUR	A four digit code assigned to describe the reason for setting up the accounts receivable.	CHAR	4	0	N
CDE_PAYEE_TYPE	Unique char value for payee types defined within financial.	CHAR	1	0	N
CDE_TRACKING_STATUS	Unique code that identifies the current tracking status of the AR.	CHAR	4	0	N
SAK_BUDGET	The system assigned key that identifies a unique budget with interChange.	NUMBER	9	0	N

Column Name	Description	Type	Length	Precision	Primary Key
CDE_RECOUP_FREQ	This field indicates the frequency by which the AR recoupment occurs. ("A" = Anytime, "M" = Monthly, "W" = Weekly, "Q" = Quarterly)	CHAR	1	0	N
NUM_HIERARCHY	This field determines the order in which an AR is recouped.	NUMBER	4	0	N
CDE_REPAY_TYPE	This field indicates the type of repayment options. ("F" = Fixed, "X" = Flexible)	CHAR	1	0	N
CDE_UNT_DEPT	Identifies the unit\department that created the financial transaction.	CHAR	2	0	N
DTE_AR_LIABILITY	This is the date of liability of the AR when it was first established.	NUMBER	8	0	N
DTE_DEFICIENCY	This is the date the AR is deficient based on a repayment plan.	NUMBER	8	0	N
DTE_REVIEW_PER_BEGIN	This is the review period begin date for which this transaction applies.	NUMBER	8	0	N
DTE_REVIEW_PER_END	This is the review period end date for which this transaction applies.	NUMBER	8	0	N
DTE_DUE	This is the date which the AR must be paid in full.	NUMBER	8	0	N

2.13.6 T_AR_CLAIM_XREF

This maintains the accounts receivable cross reference for the original and adjustment claims. When a claim adjustment is performed and the new paid amount is less than the original, an accounts receivable is setup and the cross reference is created.**T**he accounts receivable will remain open until it is dispositioned to a zero balance.

Column Name	Description	Type	Length	Precision	Primary Key
SAK_ACT_REC	System assigned key to the accounts receivable.	NUMBER	9	0	Y
SAK_CLAIM_ADJ	System assigned key of the daughter claim.	NUMBER	9	0	N

Column Name	Description	Type	Length	Precision	Primary Key
NUM_ICN_MOM	This is the field that is used to identify the claim that is having funds recouped from.**T**his is also what the providers see on the RA to identify the AR if the AR is claim related.	CHAR	13	0	N

2.13.7 T_AR_COLLECTION

This table is used to maintain history information regarding initiated collections activity for aged accounts receivables.

Column Name	Description	Type	Length	Precision	Primary Key
SAK_ACT_REC	System assigned key to the accounts receivable.	NUMBER	9	0	Y
NUM_CONTROL_AR	Unique number assigned to track accounts receivables.**T**his number will be used to file any documentation related to the accounts receivable.**T**he format of the number is RRYYJJJBBBSSS.	CHAR	13	0	N
CDE_STATUS	The status of the accounts receivable collection process.**T**he following are the valid statuses: O-Open, C-Closed, S-Sent to IFSSA for review, H-Collections hold mode, I-Collections interest on hold.	CHAR	1	0	N
DTE_LETTER_SENT	The date the initial collections letter was sent to the provider.	NUMBER	8	0	N
DTE_CERTIFIED	The date the first letter was certified as being received by the provider.	NUMBER	8	0	N
DTE_FOLLOW_UP	The date the follow up letter was sent to the provider.	NUMBER	8	0	N
DTE_IT_LETTER	The date the interest notification letter was sent to the provider.	NUMBER	8	0	N
SAK_AR_IT_RATE	System assigned key of the interest rate assigned to the accounts receivable collection.	NUMBER	9	0	N

2.13.8 T_AR_COMMENTS

This table stores the free-form text comments for a specific accounts receivable.

Column Name	Description	Type	Length	Precision	Primary Key
SAK_ACT_REC	System assigned key to the accounts receivable.	NUMBER	9	0	Y
NUM_SEQ	Represents the line number of the free-form text.	NUMBER	4	0	Y
DSC_LONG	Text used for additional documentation to be added to the accounts receivable.	CHAR	250	0	N
DTE_ADDED	This is the date the AR comment was added.	NUMBER	8	0	N
ID_USER	The clerk number of the user who entered the comment.	CHAR	8	0	N

2.13.9 T_AR_DISP

As recoupment are applied to provider's claim payments, the dispositions are created. Dispositions can also be created manually when payments are received from providers. Dispositions will be applied to each accounts receivable until it has a zero balance.

Column Name	Description	Type	Length	Precision	Primary Key
SAK_DISPOSITION	System assigned key of the accounts receivable disposition.	NUMBER	9	0	Y
SAK_ACT_REC	System assigned key to the accounts receivable.	NUMBER	9	0	N
DTE_GENERIC	Date the disposition was applied to the accounts receivable.	NUMBER	8	0	N
AMT	The amount of the disposition that was applied to the accounts receivable.	NUMBER	13	2	N
DTE_PAYMET_ISSUE	This is the financial payment issue date if the disposition was created during a financial cycle. It is the date of the disposition if the disposition was created by the online (manual disposition).	NUMBER	8	0	N
SAK_FIN_SCHED	This field contains the sak of the schedule (cycle) under which this disposition was processed. Default value is -1.**T**his may be always the default value since not all cash dispositions are processed in batch	NUMBER	9	0	N

Column Name	Description	Type	Length	Precision	Primary Key
SAK_PAYEE	System assigned key that uniquely identifies the payee.	NUMBER	9	0	N
SAK_FUND_CODE	This is the unique system assigned key to the Financial Fund Codes.	NUMBER	9	0	N
CDE_REASON_FOUR	The unique four digit code to define the AR disposition reasons.	CHAR	4	0	N
CDE_PAYEE_TYPE	Unique char value for payee types defined within financial.	CHAR	1	0	N
CDE_UNT_DEPT	Identifies the unit\department that created the financial transaction.	CHAR	2	0	N

2.13.10 T_AR_DISP_COMM

A free-form text area that allows documentation to be added to an accounts receivable disposition.

Column Name	Description	Type	Length	Precision	Primary Key
SAK_DISPOSITION	System assigned key of the accounts receivable disposition.	NUMBER	9	0	Y
NUM_SEQ	Represents the line number of the free-form text.**T**he maximum number is 8 which represents a total of 2000 characters of free form text for comments.	NUMBER	4	0	Y
DSC_LONG	Text used for additional documentation to be added to the accounts receivable disposition.	CHAR	250	0	N

2.13.11 T_AR_DISP_REAS

The reason the accounts receivable disposition was created.

Column Name	Description	Type	Length	Precision	Primary Key
CDE_REASON_FOUR	Unique code assigned to the reason.	CHAR	4	0	Y
DSC_50	Text that describes the reason code.	CHAR	50	0	N
CDE_REASON_TYPE	Code used to identify what the reason code can be used for. A = Manual Adjustment, I = Interest, C = Cash Receipts, D = Claim Activity, S = System Generated.	CHAR	1	0	N

Column Name	Description	Type	Length	Precision	Primary Key
IND_CALC_INTEREST	Indicates whether dispositions with this reason code will have interest calculated or not.	CHAR	1	0	N

2.13.12 T_AR_INTERET_RATE

This is the accounts receivables interest rate table.**T**his table is used to accrue interest against accounts receivables which have aged over a specified time period.**T**he effective date is compared against the accounts receivables original date to determine which rate to use.

Column Name	Description	Type	Length	Precision	Primary Key
SAK_AR_IT_RATE	The unique system assigned key that identifies each accounts receivable interest rate.	NUMBER	9	0	Y
DTE_EFFECTIVE	Effective date of the accounts receivable interest rate.	NUMBER	8	0	N
PT_RATE_INTEREST	Accounts receivables annual interest rate.	NUMBER	5	2	N
QTY_DAYS_FOL_UP	The set number of days used to determine when to send the follow up letter after the collection letter certified date.	NUMBER	4	0	N

2.13.13 T_AR_LETTERS

This table contains any account receivable related letters to the actual AR the letter is associated with.

Column Name	Description	Type	Length	Precision	Primary Key
SAK_ACT_REC	System assigned key to the accounts receivable.	NUMBER	9	0	Y
NUM_SEQ_AR_LTR	Uniquely identifies the AR letter	NUMBER	4	0	Y
SAK_LETTER_REQUEST	Number that uniquely identifies the letter that was requested on the AR.	NUMBER	9	0	N
NAM_PROCESS	The name of the online process or program that created the AR letter.	VARCHAR	20	0	N

2.13.14 T_AR_ONLINE_LETTER

This entity contains the key to all account receivable letters that can be accessed and generated from the account receivable panels.

Column Name	Description	Type	Length	Precision	Primary Key
SAK_LETTER	This is the unique key for a letter defined on the system.	NUMBER	9	0	Y
CDE_PAYEE_TYPE	Unique char value for payee types defined within financial.	CHAR	1	0	N

2.13.15 T_AR_REASONS

The reason for the accounts receivable.

Column Name	Description	Type	Length	Precision	Primary Key
CDE_REASON_FOUR	Unique code assigned for the reason.**T**his code is used as the accounts receivable EOB on the RA.	CHAR	4	0	Y
DSC_50	Free form text describing the meaning of the reason code.	CHAR	50	0	N
CDE_REASON_TYPE	Code used to identify what the reason code can be used for. An example of this is that some reason codes will only be allowed for manual accounts receivables.	CHAR	1	0	N

2.13.16 T_AR_STATUS

This contains all the valid reasons for tracking an accounts receivable status.

Column Name	Description	Type	Length	Precision	Primary Key
CDE_DISP_REASON	Contains the reason code for the status of an A/R	CHAR	4	0	Y
DSC_50	Text giving description of status reason code.	CHAR	50	0	N

2.13.17 T_AR_SUPP_DTL

This entity contains those fields related to an account receivable that are used in MAR reporting and are not required on every account receivable. Not all accounts receivable records require an entry in this table.

Column Name	Description	Type	Length	Precision	Primary Key
SAK_ACT_REC	System assigned key to the accounts receivable.	NUMBER	9	0	Y
SAK_PUB_HLTH	System assigned internal key for a medical assistance program.	NUMBER	9	0	N

Column Name	Description	Type	Length	Precision	Primary Key
CDE_PROV_SPEC	A code representing the specialized area of practice for a provider.	CHAR	3	0	N
CDE_PROV_TYPE	Type that a provider is licensed for.	CHAR	2	0	N
SAK_CDE_AID	System assigned key to uniquely identify a valid aid category.	NUMBER	9	0	N
SAK_RECIP	The system assigned internal key for a unique recipient.	NUMBER	9	0	N
DTE_COT_STLMNT	Contains the cost settlement date of the AR.	NUMBER	8	0	N
DTE_FED_RPT	Contains the date on which the outstanding AR was reported to the federal government.	NUMBER	8	0	N

2.13.18 T_AR_TXN_XREF

This is the relationship between an Accounts receivable and a non-claim transaction such as manage care or tpl.

Column Name	Description	Type	Length	Precision	Primary Key
SAK_ACT_REC	System assigned key to the accounts receivable.	NUMBER	9	0	Y
CDE_TXN	The code of the financial transaction	CHARACTER	1	0	N
SAK_TXN	This is the system assigned key of the transaction for which the AR is related.	NUMBER	9	0	N

2.13.19 T_BANK_PD_NOISSUE

This contains information about each payment that cleared the bank but was not registered in the MMIS payment file.

Column Name	Description	Type	Length	Precision	Primary Key
NUM_CHECK	MICR number that is preprinted on the check by the financial institution.**T**his number is used to identify the check to all parties external to the system.	CHAR	9	0	Y

Column Name	Description	Type	Length	Precision	Primary Key
TOTAL_AT_PAID	The amount for which the check was written.	NUMBER	11	2	N
DTE_CLEARED	This is the date the check cleared the bank.	NUMBER	8	0	N
CDE_STATUS1	Status code to indicate in the error has been resolved. 'A' for an active error that is not resolved. 'I' for inactive for an inactive error that has been resolved.	CHAR	1	0	N

2.13.20 T_CASH_BATCH_NUM

The cash receipt batch number indicates the type of check that is returned to the state. Each check type (Provider Refunds, Attorney, SURS, and so on.) has their own batch numbers.**T**hese numbers become part of the control number that is stamped on a copy of the check during the microfilming process. We store and report cash receipts based on the control number.

Column Name	Description	Type	Length	Precision	Primary Key
NUM_BATCH	Indicates the department the check was returned to and the type of check that was received.	NUMBER	4	0	Y
DESC_BATCH	A short explanation of which department the batch range is for and the type of return.	CHAR	30	0	N
IND_DEPOSIT	Indicates whether the check that was returned should be deposited.	CHAR	1	0	N
IND	Indicates whether the check that was returned was issued from the MMIS financial system.	CHAR	1	0	N
IND_RTS	Indicates whether or not a check requires the return to sender information.	CHAR	1	0	N
IND_USER_ASSIGN	This indicates whether the user can manually assign the batch/unit number to a CCN from the online cash receipt window. Valid values (Y/N).	CHAR	1	0	N

2.13.21 T_CASH_COMMENT

This entity holds comments for both cash receipts and cash receipt dispositions. If it is a comment for a cash receipt, then the NUM SEQ BATCH will be 0. If it is a comment for a disposition, then the NUM SEQ BATCH will be set to that of the disposition.

Column Name	Description	Type	Length	Precision	Primary Key
SAK_CASH_RECEIPT	System assigned key that uniquely identifies any payment submitted to the account from an outside source.	NUMBER	9	0	Y
NUM_SEQ_BATCH	Number that uniquely identifies each individual disposition which was applied to a cash receipt.	NUMBER	9	0	Y
NUM_SEQ	Represents the line number of the free-form text.	NUMBER	4	0	Y
DSC_150	Text containing comment added to disposition.	CHAR	150	0	N
DTE_ADDED	This is the date the cash receipt comment was added.	NUMBER	8	0	N
ID_USER	The clerk number of the user who entered the comment.	CHAR	8	0	N

2.13.22 T_CASH_DISP_REASON

The reason for applying the money received from an external source.

Column Name	Description	Type	Length	Precision	Primary Key
CDE_REASON_FOUR	Code used to track the reason a transaction is done.	CHAR	4	0	Y
DSC_50	Describes the reason of the cash receipt disposition	CHAR	50	0	N
IND	Indicates if we will require a provider number to be entered on the cash receipt before allowing a disposition with this reason code.	CHAR	1	0	N
IND_OL	This field if set to 'Y' means that the reason code is associated with a disposition that will be posted online. A 'N' value will indicate posting in Batch	CHAR	1	0	N
IND_GL	This field if set to 'Y' means that the reason code is associated with a disposition that will be reported on the general ledger (provider earnings).	CHAR	1	0	N

Column Name	Description	Type	Length	Precision	Primary Key
IND_CLAIM	This field if set to 'Y' means that the reason code is associated with a disposition that is claim related.	CHAR	1	0	N
IND_TYPE	"This field if set to 'Y' means that the reason code is associated with a disposition associated with a particular type of transaction.**T**his will be used primarily in online windows so that the CR is associated with the correct transaction. A = A/R, E = Expenditure, S = System, C = Cash "	CHAR	1	0	N

2.13.23 T_CASH_PYT_TYPE

This code table entity contains all the possible payment types that can be sent as a cash receipt into the MMIS.

Column Name	Description	Type	Length	Precision	Primary Key
CDE_PAYMET_TYPE	This field stores the code of the cash receipt payment type.	CHAR	1	0	Y
DSC_PAYMET_TYPE	This field stores the description of the cash receipt payment type code.	VARCHAR	20	0	N

2.13.24 T_CASH_RCT_DISP

A cash receipt disposition applies the money received from an entity to a specific purpose. When a provider returns money because of claims that were overpaid, each claim adjustment would represent a cash receipt disposition. Other disposition types include Drug Rebate payments, Premium payments, TPL recoveries, accounts receivable payments and money returned in error.

Column Name	Description	Type	Length	Precision	Primary Key
SAK_CASH_RECEIPT	System assigned key that uniquely identifies any payment submitted to the account from an outside source.	NUMBER	9	0	Y
NUM_SEQ_BATCH	Number that uniquely identifies each individual disposition which was applied to a cash receipt.	NUMBER	9	0	Y

Column Name	Description	Type	Length	Precision	Primary Key
AT_DISPOSITION	The amount being applied from a check for a single transaction (adjustment, overpayment return, accounts receivable payment, and so on.).	NUMBER	13	2	N
IND	Indicates when a transaction is written to general ledger. After it has been written, no updates will be allowed to the disposition.	CHAR	1	0	N
DTE_POSTED	The date the cash receipt disposition was posted.**T**his date will determine which week the disposition will be reported in.	NUMBER	8	0	N
DTE_ASSIGNED	The date this portion of the cash receipt was originally paid out.	NUMBER	8	0	N
SAK_PAYEE	This is the payee associated with this portion of the cash receipt.**T**his field will store the sak of various entities such as sak_prov_loc, sak_recip, sak_carrier, and so on..	NUMBER	9	0	N
CDE_PAYEE_TYPE	Unique char value for payee types defined within financial.	CHAR	1	0	N
DTE_PROCESSED	This field contains the date on which the cash disposition was processed in batch.**T**his is used during the extraction and balancing of the cash disposition	NUMBER	8	0	N
SAK_FIN_SCHED	This field contains the sak of the schedule (cycle) under which this disposition was processed. Default value is 0 or -1.**T**his may be always the default value since not all cash dispositions are processed in batch	NUMBER	9	0	N
SAK_FUND_CODE	This is the unique system assigned key to the Financial Fund Codes.	NUMBER	9	0	N
CDE_REASON_FOUR	Code used to track the reason a transaction is done.	CHAR	4	0	N

Column Name	Description	Type	Length	Precision	Primary Key
SAK_BUDGET	The system assigned key that identifies a unique budget with interChange.	NUMBER	9	0	N

2.13.25 T_CASH_RCT_TOTALS

The daily total number of cash receipts received by each department.**T**hese totals are used to balance against the cash receipts entered.

Column Name	Description	Type	Length	Precision	Primary Key
DTE_GENERIC	Date the submitted checks were received by the account.	NUMBER	8	0	Y
NUM_COUT_MAIL	The number of checks received by the mailroom on a given date.	NUMBER	9	0	N
NUM_COUT_MISC	The number of miscellaneous checks received on a given date.	NUMBER	9	0	N
NUM_COUT_PROV	The number of checks received by the provider relations department on a given date.	NUMBER	9	0	N
NUM_COUT_SURS	The number of checks received by the SURS department on a given date.	NUMBER	9	0	N
NUM_COUT_TPL	The number of checks received by the TPL department on a given date.	NUMBER	9	0	N

2.13.26 T_CASH_RCT_XREF

This associates a portion of a cash receipt (cash receipt disposition) to either a claim adjustment, account receivable, or system payout.

Column Name	Description	Type	Length	Precision	Primary Key
SAK_CASH_RECEIPT	System assigned key that uniquely identifies any payment submitted to the account from an outside source.	NUMBER	9	0	Y
NUM_SEQ_BATCH	Number that uniquely identifies each individual disposition which was applied to a cash receipt.	NUMBER	9	0	Y

Column Name	Description	Type	Length	Precision	Primary Key
SAK	System assigned key that can identify a claim adjustment, account receivable, or system payout record.	NUMBER	9	0	N
CDE	Defines the system assigned key as claim adjustment ('claim type'), Account receivable ('R'), or system payout ('S').	CHAR	1	0	N

2.13.27 T_CASH_RECEIPT

This accounts for any funds (returned or issued) submitted by an external source into the MMIS that will be deposited by the account.

Column Name	Description	Type	Length	Precision	Primary Key
SAK_CASH_RECEIPT	System assigned key that uniquely identifies any payment submitted to the account from an outside source.	NUMBER	9	0	Y
CASH_CTL_NO	This number is entered into the system for matching the internal record with its paper copy.	CHAR	11	0	N
NAME	The name of the source that has submitted a payment (system issued or personal) to the account.	CHAR	50	0	N
AT_PAID	The amount of the payment received.	NUMBER	13	2	N
CHECK_SAK	System assigned key that uniquely identifies a payment issued from the MMIS system.**T**his is used to store the MMIS issued check sak as found onT_check for returned payments.	NUMBER	9	0	N
NUM_CHECK	The MICR number or transaction number printed on the payment that was submitted to the state by an external source.	CHAR	9	0	N

Column Name	Description	Type	Length	Precision	Primary Key
DTE_CHECK	The date a returned payment was issued. For check payments this is the date actually printed on the check.	NUMBER	8	0	N
NUM_BATCH	This field is the unit, department, or reason why the payment was received.	NUMBER	4	0	N
NAM_REMITTER	This is the remitter's name that will be used as a secondary name on the cash receipt.	CHAR	50	0	N
DTE_RECEIPT	This is the date that the cash receipt was put into the system.	NUMBER	8	0	N
CDE_PAYMET_TYPE	This field stores the code of the cash receipt payment type.	CHAR	1	0	N
CDE_PAYEE_TYPE	Unique char value for payee types defined within financial.	CHAR	1	0	N
SAK_PAYEE	The unique identifier for a payee defined n the system.	NUMBER	9	0	N
CDE_CASH_STATUS	This is the unique code value of the cash status.	CHAR	1	0	N

2.13.28 T_CDE_CASH_STATUS

This code table contains all the status codes applicable to a cash receipt record.

Column Name	Description	Type	Length	Precision	Primary Key
CDE_CASH_STATUS	This is the unique code value of the cash status.	CHAR	1	0	Y
DSC_CASH_STATUS	This is the description of the status code.	VARCHAR2	30	0	N

2.13.29 T_CDE_FUND_FFP_RATE

This table contains the financial FFP rates related to the funding source.

Column Name	Description	Type	Length	Precision	Primary Key
SAK_FUND_CODE	This is the unique system assigned key to the Financial Fund Codes.	NUMBER	9	0	Y

Column Name	Description	Type	Length	Precision	Primary Key
DTE_EFFECTIVE	This is the date the rates for the fund code is effective	NUMBER	8	0	Y
DTE_END	This is the date the rates for the fund code is no longer effective.	NUMBER	8	0	N
PT_FED_RATE	This is the Federal reporting rate for the fund code.	NUMBER	6	5	N
PT_STATE_RATE	This is the State responsibility rate for the fund code.	NUMBER	6	5	N

2.13.30 T_CDE_LIEN_RSN

This contains all of the valid lien disposition types for the MMIS system.

Column Name	Description	Type	Length	Precision	Primary Key
CDE_REASON_LIEN	The disposition reason code identifies the reason for the disposition against a lien.	CHAR	4	0	Y
DSC_LIEN_REASON	Description of the value assigned to the lien disposition code.	CHAR	30	0	N
CDE_REASON_TYPE	Indicator used to determine whether the user has the ability to select a disposition code for a record.	CHAR	1	0	N

2.13.31 T_CDE_TAX_FORM_TYPE

This table contains the tax form type codes for creating tax information records.

Column Name	Description	Type	Length	Precision	Primary Key
CDE_FORM_TYPE	This uniquely identifies the tax form type such as W2 or 1099.	CHAR	4	0	Y
DSC_FORM_TYPE	This contains a brief description of the form being defined.	VARCHAR2	30	0	N

2.13.32 T_CDE_TAX_REC_TYPE

This table contains the tax record type codes for creating tax information records.

Column Name	Description	Type	Length	Precision	Primary Key
CDE_FORM_TYPE	This uniquely identifies the tax form type such as W2 or 1099.	CHAR	4	0	Y

Column Name	Description	Type	Length	Precision	Primary Key
CDE_REC_TYPE	This uniquely identifies the tax record type and can correspond to a specific record type on a IRS tax file.	CHAR	1	0	Y
DSC_REC_TYPE	This contains a brief description of the record being defined.	VARCHAR2	30	0	N

2.13.33 T_CHCK_CLM_XREF

This identifies each claim or other transaction that was paid for by a particular check. One check can pay multiple claims.**T**his table is partitioned. If the CDE is of any claim type, then the data must be found on the valid partition. If the CDE is of a financial txn, then the data can be found on AIM00. No partition search is required for financial txns.**T**he SAK represents the SAK_CLAIM if the CDE is of claim type.**T**he SAK represents the SAK_EXPENDITURE, SAK_CAPITATION, SAK_AR_DISP, OR SAK_ADMIN_FEE, if the CDE is of financial txn.

Column Name	Description	Type	Length	Precision	Primary Key
CHECK_SAK	The unique system assigned key that identifies a remittance advice\letter in the system.**T**he actual check is onT_check.	NUMBER	9	0	Y
SAK	System assigned key which uniquely identifies a claim in the system.	NUMBER	9	0	N
CDE	Code that identifies the type of txn (Claim Type or Financial Txn) that required a payment. **T**his code may be any of the claim types (D,M,B,H,I,L,O,P,Q,A,C) OR financial txns R (Acct Recs), S (expenditures), V (capitation), X (Lien recovery), F (FICA reduction)	CHAR	1	0	N
NUM_DTL	This is the detail number of the claim if the transaction is a claim. For a claim, 0 would indicate that the claim was paid at the header and not the detail level.	NUMBER	4	0	N
SAK_FUND_CODE	This is the unique system assigned key to the Financial Fund Codes.	NUMBER	9	0	N
SAK_FIN_COS	This is unique key for the Financial Category of Service.	NUMBER	9	0	N

Column Name	Description	Type	Length	Precision	Primary Key
AT_PAID	The amount that a specific transaction paid for the payment specified.	NUMBER	10	2	N
AT_STATE_SHARE	The amount that a specific transaction paid for state share.	NUMBER	10	2	N
SAK_PUB_HLTH	System assigned internal key for a medical assistance program.	NUMBER	9	0	N

2.13.34 T_CHECK

This contains information about each payment that was issued by the MMIS system.

Column Name	Description	Type	Length	Precision	Primary Key
CHECK_SAK	The unique system assigned key that identifies a payment that originates from the MMIS.	NUMBER	9	0	Y
NUM_CHECK	The number that normally appears the on the check or reported on the remittance advice. It can refer to the check or EFT or state transfer.	CHAR	9	0	N
CDE_PAY_TYPE	Code field to store an 'E' for EFT, 'T' for State Transfer, or 'C' for check. Used to designate the payment type.	CHAR	1	0	N
TOTAL_AT_PAID	The amount for which the check was written.	NUMBER	11	2	N
CDE_PAYEE_TYPE	Unique char value for payee types defined within financial.	CHAR	1	0	N
SAK_PAYEE	System assigned key that uniquely identifies a payee. Such as provider, recipient, carrier, and so on.	NUMBER	9	0	N
DTE_ISSUE	The date the payment is issued for. The date on which the payment was created is in dte_cycle.	NUMBER	8	0	N

Column Name	Description	Type	Length	Precision	Primary Key
CDE_STATUS1	This is the status code used on the T_CHECK andT_PAYMET_TMP tables. Examples are: An 'I' would indicate the check has been issued, a 'V' indicates a VOID, an 'R' indicates the check was reissued, a 'C' indicates a check has CLEARED the bank and 'S' indicates Stopped. Please see the code table for the full list of values.	CHAR	1	0	N
SAK_FIN_SCHED	The system assigned key that identifies a unique financial schedule within the interChange financial subsystem.	NUMBER	9	0	N
DTE_CYCLE	This is the date of the batch cycle in which the payment\RA was generated.	NUMBER	8	0	N

2.13.35 T_CHECK_BANNER

The banner page announcement that will be printed with the RA depending on various criteria.

Column Name	Description	Type	Length	Precision	Primary Key
SAK_CHECK_BANNER	Check banners system assigned key.	NUMBER	9	0	Y
DTE_EFFECTIVE_FROM	The date the check banner goes into effect.	NUMBER	8	0	N
DTE_EFFECTIVE_THRU	The last date the check banner is effective.	NUMBER	8	0	N
IND_ALL_RA	This is a Yes/No indicator telling whether all RA's will be getting the message or if there is criteria that must be reviewed for this message. Y = All RA's will get the message. N = use the criteria tables.	CHAR	1	0	N
DSC_BANNER_TEXT	This is the contents of the banner message.	VARCHAR2	4000	0	N

2.13.36 T_CHECK_SLIP_DATE

If the state changes the original payment issue date then this table is updated to reflect the new date, this new date is known as a slip date.**T**his table is updated in the batch cycle when the state sends a file with the cleared payments.

Column Name	Description	Type	Length	Precision	Primary Key
CHECK_SAK	The unique system assigned key that identifies a payment that originates from the MMIS.	NUMBER	9	0	Y
DTE_PAYMET_SLIP	This is the date the OHCA indicates that the true issue date should have been.**T**his is caused due an issue at the State Treasure's Office. If the STO changes the payment issue date to the bank this is known as a slip date.	NUMBER	8	0	N

2.13.37 T_CHECK_STATUS_CDE

This is the table that is used to store the valid payment statuses of the checks/EFT's/State Transfers in the system.

Column Name	Description	Type	Length	Precision	Primary Key
CDE_STATUS1	This is the status code used on the T_CHECK andT_PAYMET_TMP tables. Examples are: An 'I' would indicate the check has been issued, a 'V' indicates a VOID, an 'R' indicates the check was reissued, a 'C' indicates a check has CLEARED the bank, an 'S' indicates Stopped and an 'X' for Cancelled by Statute. Please see the table for the full list of values.	CHAR	1	0	Y
DSC_STATUS	This is the description of the check statuses that is used for display and reporting purposes.	CHAR	30	0	N

2.13.38 T_CHECK_STATUS_HIST

This is a status history table that will retain the status history of a payment as the status of the payment changes.

Column Name	Description	Type	Length	Precision	Primary Key
CHECK_SAK	The unique system assigned key that identifies a payment that originates from the MMIS.	NUMBER	9	0	Y

Column Name	Description	Type	Length	Precision	Primary Key
CDE_STATUS1	This is the status code used on the T_CHECK andT_PAYMET_TMP tables. Examples are: An 'I' would indicate the check has been issued, a 'V' indicates a VOID, an 'R' indicates the check was reissued, a 'C' indicates a check has CLEARED the bank, an 'S' indicates Stopped and an 'X' for Cancelled by Statute. Please see the table for the full list of values.	CHAR	1	0	Y
DTE_STATUS	The date the status was updated in the system.	NUMBER	8	0	N
DTE_STATUS_CHG_EXT	This is the actual date the status was changed externally.	NUMBER	8	0	N
DTE_REPORTED	This is the date that the status was reported either to the state or to CMS.	NUMBER	8	0	N

2.13.39 T_CHECK_VOID

This contains information about a check when it is voided.

Column Name	Description	Type	Length	Precision	Primary Key
CHECK_SAK	The unique system assigned key that identifies a payment that originates from the MMIS.	NUMBER	9	0	Y
DTE_VOID	The date the check was stamped void and destroyed.	NUMBER	8	0	N
CDE_REASON_REISSUE	The reason code that associates the reason table entry with the check reissue check xref entry.	CHAR	1	0	N

Column Name	Description	Type	Length	Precision	Primary Key
DTE_PROCESSED	This field contains the date on which the account receivable was processed in batch.**T**his is used during the extraction and balancing of the expenditure.	NUMBER	9	0	N
SAK_FIN_SCHED	This field contains the sak of the schedule (cycle) under which this disposition was processed. Default value is 0 or -1.**T**his may be always the default value since not all cash dispositions are processed in batch	NUMBER	9	0	N

2.13.40 T_CHK_BAN_CLM_TYPE

This table contains the claim type used as selection criteria for the banner page announcement that will be printed on the RA.

Column Name	Description	Type	Length	Precision	Primary Key
SAK_CHECK_BANNER	Check banners system assigned key.	NUMBER	9	0	Y
CDE_CLM_TYPE	A code to represent the type of claim we are processing. (that is, Physician, Inpatient, Outpatient, Pharmacy, and so on.).**T**his is used to determine which message to display.	CHAR	1	0	Y
CNT	The count of the number of updates to the group of claim types for the associated check banner.**T**his count is used internally for audit purposes.	NUMBER	4	0	N

2.13.41 T_CHK_BAN_FIN_CYCLE

This entity stores the relationship between a financial cycle and a banner message.

Column Name	Description	Type	Length	Precision	Primary Key
SAK_CHECK_BANNER	Check banners system assigned key.	NUMBER	9	0	Y

Column Name	Description	Type	Length	Precision	Primary Key
SAK_FIN_CYCLE	The system assigned key that identifies a unique financial cycle within interChange.	NUMBER	9	0	N

2.13.42 T_CHK_BAN_PAYEE

This table contains the payee associated with a banner message that will be generated on the remittance advice.

Column Name	Description	Type	Length	Precision	Primary Key
SAK_CHECK_BANNER	Check banners system assigned key.	NUMBER	9	0	Y
CDE_PAYEE_TYPE	Unique char value for payee types defined within financial.	CHAR	1	0	Y
SAK_PAYEE	This contains the unique identifier for a payee defined in the system.	NUMBER	9	0	Y

2.13.43 T_CHK_BAN_PGM

This table contains the RA banner information for the programs requested that a provider is enrolled in.

Column Name	Description	Type	Length	Precision	Primary Key
SAK_CHECK_BANNER	Check banners system assigned key.	NUMBER	9	0	Y
SAK_PROV_PGM	This is the system assigned key of the provider enrollment program.	NUMBER	9	0	Y

2.13.44 T_CHK_BAN_PROV_TYP

This table contains the provider type used as selection criteria for the banner page announcement that will be printed on the RA.

Column Name	Description	Type	Length	Precision	Primary Key
SAK_CHECK_BANNER	Check banners system assigned key.	NUMBER	9	0	Y
CDE_PROV_TYPE	Provider type used as selection criteria for the associated check banner.	CHAR	2	0	Y

Column Name	Description	Type	Length	Precision	Primary Key
CNT	The count of the number of updates to the group of provider types for the associated check banner.**T**his count is used internally for audit purposes.	NUMBER	4	0	N

2.13.45 T_CHK_BAN_PR_SPEC

This table contains the RA banner information for specific provider specialties.

Column Name	Description	Type	Length	Precision	Primary Key
SAK_CHECK_BANNER	Check banners system assigned key.	NUMBER	9	0	Y
CDE_PROV_SPEC	This is the provider specialty that will get the banner message.	CHAR	3	0	Y

2.13.46 T_CHK_ENCODE_ERROR

This contains information about each check that cleared the bank but the amt paid total is different the CHECK amount on file.

Column Name	Description	Type	Length	Precision	Primary Key
CHECK_SAK	The unique system assigned key that identifies a payment that originates from the MMIS.	NUMBER	9	0	Y
TOTAL_AT_PAID	The amount for which the check was written.	NUMBER	11	2	N

2.13.47 T_CHK_REISSUE_RSN

This contains the reasons for the check reissues.

Column Name	Description	Type	Length	Precision	Primary Key
CDE_REASON_REISSUE	The reason code that associates the reason table entry with the check reissue check xref entry.	CHAR	1	0	Y
DSC_25	The description associated with the reason code for the check reissues.	CHAR	25	0	N

2.13.48 T_CHK_REISSUE_XREF

This contains information about each check that was reissued by the MMIS system. Gives the cross-reference between the original check and the reissued check.

Column Name	Description	Type	Length	Precision	Primary Key
CHECK_SAK	The unique system assigned key that identifies a payment that originates from the MMIS.	NUMBER	9	0	Y
SAK_CHK_REISSUE	The unique system assigned key that identifies a reissued check.	NUMBER	9	0	N
DTE_REQUEST	The date that the check reissue entry is made.	NUMBER	8	0	N
IND_REISSUE	Indicates whether or not a request will be made to reissue the check or not. 'Y' to reissue the check or 'N' to not reissue the check.	CHAR	1	0	N
CDE_APPROVAL	The code used to identify the status of the approval of the check reissue. 'Y' is used to indicate that the approval has processed, 'N' is used to indicate that the approval has been rejected, and 'O' is used to indicate the approval is open.	CHAR	1	0	N
DTE_ACTIVATION	The date that the check reissue entry is approved for payout.	NUMBER	8	0	N
CDE_REASON_REISSUE	The reason for which the check reissue entry was made.	CHAR	1	0	N

2.13.49 T_CLAIM_INTEREST

This table contains information relative to the claims interest process.

Column Name	Description	Type	Length	Precision	Primary Key
SAK_CLAIM	This is the system assigned key for the claim.	NUMBER	9	0	Y
SAK_INTEREST	This is a unique system assigned key that will identify the interest rate.	NUMBER	9	0	N

Column Name	Description	Type	Length	Precision	Primary Key
SAK_PAYEE	This is the provider that is being paid the interest on the claim.	NUMBER	9	0	N
SAK_PUB_HLTH	System assigned key to uniquely identify each State program.	NUMBER	9	0	N
AT_INTEREST	The total amount of interest paid on the claim.	NUMBER	11	2	N
DTE_PAID	The date that the claim interest was paid to the provider.	NUMBER	8	0	N
NUM_DAYS	The number of days used in the interest calculation.	NUMBER	9	0	N
IND_TYPE	This is the type of claim interest payment.	CHAR	1	0	N

2.13.50 T_DAILY_FUND_TXN

This table stores the information about the daily wire transfer information that is done by the State.**T**he total of the fields is that actual amount that was deposited on that specific day.

Column Name	Description	Type	Length	Precision	Primary Key
SAK_FUND_TXN	The system assigned key for the daily State Fund transaction records.	NUMBER	9	0	Y
DTE_FUND_TRANSFER	This is the date the State Funds transfer.	NUMBER	8	0	N
AT_CHECK_CLEARED	This is the total amount presented to the Federal Reserve bank.	NUMBER	12	2	N
AT_ET_CLEARED	This is the total amount presented to the Federal Reserve bank.	NUMBER	12	2	N
AT_PROV_REFUNDS	This is the total amount of deposits made into the EDS bank account due to provider cash refunds.	NUMBER	12	2	N
AT_HCE_DEPOSIT	This is the total amount deposited due to SUR cash receipts.	NUMBER	12	2	N

Column Name	Description	Type	Length	Precision	Primary Key
AT_HMS_DEPOSIT	This is the total amount deposited due to TPL cash receipts.	NUMBER	12	2	N
AT_DRUG_DEPOSIT	This is the total amount deposited due to Drug Rebate cash receipts.	NUMBER	12	2	N
AT_RETURNED_NFS	This is the total amount returned to due to non-sufficient funds (NFS).	NUMBER	12	2	N
AT_POSITIVE_ADJ	This is the total adjustment positive amount.	NUMBER	12	2	N
AT_NEGATIVE_ADJ	This is the total adjustment negative amount.	NUMBER	12	2	N
DSC_ADJUSTMENT	This is the adjustment description field.	CHAR	255	0	N

2.13.51 T_ET_TRACE_XREF

This is a temporary data table to capture the EFT trace information from the bank/STO to create the 835 electronic RA.

Column Name	Description	Type	Length	Precision	Primary Key
NUM_CHECK	The number of the EFT assigned by the MMIS and sent to STO.	CHAR	9	0	Y
DTE_EFFECTIVE	The date of the EFT transaction.	NUMBER	8	0	N
NUM_PARTICIPANT	The provider number sent to STO identifying the party being paid.	CHAR	15	0	N
NUM_SEQUENCE	The sequence number defined by STO. Being stored as informational.	NUMBER	3	0	N
NUM_AGENCY	The agency number defined by STO. Being stored as informational	NUMBER	7	0	N
CDE_CLASS	The class code defined by STO. Being stored as informational.	CHAR	3	0	N
AT_PAYMENT	The amount of the EFT paid to the provider.	NUMBER	11	2	N

Column Name	Description	Type	Length	Precision	Primary Key
NUM_TRACE	The EFT Trace number assigned by the bank and sent on the EFT record.**T**his is the number that will display on the provider's bank statement.	NUMBER	7	0	N

2.13.52 T_EXPENDITURE

This contains the expenditure\payout payment transactions that includes overpayment refunds and provider advance transactions for the MMIS system.

Column Name	Description	Type	Length	Precision	Primary Key
SAK_EXPENDITURE	System assigned key that uniquely identifies an expenditure transaction.	NUMBER	9	0	Y
SAK_FUND_CODE	This is the unique system assigned key to the Financial Fund Codes.	NUMBER	9	0	N
CDE_PAYEE_TYPE	Unique char value for payee types defined within financial.	CHAR	1	0	N
SAK_PAYEE	System assigned key that uniquely identifies the name and address of a provider or a non-provider entity on the MMIS system. For example, the addresses of Lien Holders and Counties and non-provider entities to which we make Expenditure Payments.	NUMBER	9	0	N
CDE_COUNTY	A unique code that identifies the county to which a payment is made.	CHAR	10	0	N
CDE_REASON_FOUR	Indicates the reason an expenditure is added to the system.	CHAR	4	0	N
AT_REIMBURSEMENT	This is the amount that is keyed in by the online clerk. It there are any deductions to take (ie. State Share or FICA) they will be computed off of this amount.	NUMBER	13	2	N

Column Name	Description	Type	Length	Precision	Primary Key
AT_PAID	The amount that the payee is paid.	NUMBER	13	2	N
AT_STATE_SHARE	This is that amount of State Share that will be removed from the reimbursement amount to calculate the paid amount.	NUMBER	13	2	N
AT_FICA	This is that amount of FICA that will be removed from the reimbursement amount to calculate the paid amount.	NUMBER	9	2	N
DTE_ADDED	Date on which the expenditure request was initiated.	NUMBER	8	0	N
DTE_ACTIVATION	Date on which the expenditure transaction was activated for payment	NUMBER	8	0	N
DTE_PAYMET_ISSUE	This is the financial payment issue date as it appears on the check or EFT.	NUMBER	8	0	N
DTE_ACTIVITY	Date of activity associated with expenditure txn.	NUMBER	8	0	N
NUM_COR	Number used to reference a correspondence document to the expenditure transaction.	CHAR	6	0	N

Column Name	Description	Type	Length	Precision	Primary Key
CDE_PROCESS_TYPE	This field is used to indicate what type of process the expenditure should go through.**T**his was formerly ind_manual. M = manual process, where a physical check was cut outside of MMIS and a system entry must be made without generating a payment. D = Immediate process, this would be the same as a daily check cycle. It means that the expenditure must get processed as soon as possible. R = Regular process.**T**his would indicate that the expenditure is to go through the normal financial cycle(s).	CHAR	1	0	N
IND_PROCESSED	Indicates whether or not the expenditure payment has processed through the financial batch cycle.	CHAR	1	0	N
ID_PROV_RENDER	For RA reporting only. For reporting only of possible rendering providers.	CHAR	9	0	N
ID_CLERK	Logon user id.	CHAR	8	0	N
ID_CLERK_APPROVED	Logon user id.	CHAR	8	0	N
TME_ACTIVATION	This is the time that the expenditure was activated for release to payment.	NUMBER	8	0	N
SAK_FIN_SCHED	This field contains the sak of the schedule (cycle) under which this disposition was processed. Default value is 0 or -1.**T**his may be always the default value since not all cash dispositions are processed in batch	NUMBER	9	0	N

Column Name	Description	Type	Length	Precision	Primary Key
DTE_PROCESSED	This field contains the date on which the expenditure was processed in batch.**T**his is used during the extraction and balancing of the expenditure.	NUMBER	8	0	N
CDE_UNT_DEPT	Identifies the unit\department that created the financial transaction.	CHAR	2	0	N
SAK_FIN_COS	This is unique key for the Financial Category of Service.	NUMBER	9	0	N
SAK_SHOT_COS	A system assigned key (SAK) classifying a rule that qualifies a COS.	NUMBER	4	0	N

2.13.53 T_EXPENDITURE_RSN

This contains all of the valid reasons an expenditure may be added to the MMIS system.

Column Name	Description	Type	Length	Precision	Primary Key
CDE_REASON_FOUR	Indicates the reason for which an expenditure is added to the system.	CHAR	4	0	Y
DSC_CDE	Description of the reason code for an expenditure transaction.	CHAR	15	0	N
CDE_REASON_TYPE	Used on the reason code to indicate the type of transaction that produced the expenditure/non-claim payout.**T**his field determines if any additional processing must occur. Valid values are A - Account Receivable, E - Expenditure, and C - Cash Receipt.	CHAR	1	0	N
IND_MANUAL	Indicates whether the expenditure requires a manual check.	CHAR	1	0	N
CDE_RSN_HIPAA	This is the HIPAA expenditure reason code to put on the 835 transaction.	CHAR	2	0	N

2.13.54 T_EXPENDITURE_SUPP_DTL

This entity will contain those fields related to an expenditure that are used in MAR reporting and are not required on every expenditure. Not all expenditure records require an entry in this table.

Column Name	Description	Type	Length	Precision	Primary Key
SAK_EXPENDITURE	System assigned key that uniquely identifies an expenditure transaction.	NUMBER	9	0	Y
CDE_PROV_TYPE	Type that a provider is licensed for.	CHAR	2	0	N
CDE_PROV_SPEC	A code representing the specialized area of practice for a provider.	CHAR	3	0	N
SAK_CDE_AID	System assigned key to uniquely identify a valid aid category.	NUMBER	9	0	N
SAK_PUB_HLTH	System assigned internal key for a medical assistance program.	NUMBER	9	0	N
SAK_RECIP	System assigned key that uniquely identifies the recipient that may be associated with the expenditure transaction.	NUMBER	9	0	N
DTE_TO_DOS	This field contains the "to" date of service of the review period.	NUMBER	8	0	N
DTE_FROM_DOS	This field contains the from date of service of the review period.	NUMBER	8	0	N
DTE_COT_STLMNT	Contains the cost settlement date of the AR.	NUMBER	8	0	N
IND_1099_EXEMPT	This field indicates if the expenditure transaction is exempt from 1099 earnings calculations. If the value is 'Y' then the transaction is exempt.	CHAR	1	0	N

2.13.55 T_EXPEND_COMMENT

A free-form text that allows documentation to be added to the expenditure.

Column Name	Description	Type	Length	Precision	Primary Key
SAK_EXPENDITURE	System assigned key that uniquely identifies an expenditure transaction.	NUMBER	9	0	Y

Column Name	Description	Type	Length	Precision	Primary Key
NUM_SEQ	Represents the line number of the free-form text.	NUMBER	4	0	Y
DSC_LONG	Free form text used to add information to an expenditure transaction.	CHAR	250	0	N
DTE_ADDED	This is the date the expenditure comment was added.	NUMBER	8	0	N
ID_USER	The clerk number of the user who entered the comment.	CHAR	8	0	N

2.13.56 T_EXPEND_TXN_XREF

Column Name	Description	Type	Length	Precision	Primary Key
SAK_EXPENDITURE	System assigned key that uniquely identifies an expenditure transaction.	NUMBER	9	0	Y
CDE_TXN	The code of the financial transaction	CHARACTER	1	0	N
SAK_TXN	This is the system assigned key of the transaction for which the Expenditure is related.	NUMBER	9	0	N
NUM_SEQ	The unique identifier for a cash receipt disposition.	NUMBER	9	0	N

2.13.57 T_FCOS_FUND_XREF

This table contains all the records for financial category of service calculation that only requires the fund code to determine the category of service.

Column Name	Description	Type	Length	Precision	Primary Key
SAK_FIN_COS	This is unique key for the Financial Category of Service.	NUMBER	9	0	Y
SAK_FUND_CODE	This is the unique system assigned key to the Financial Fund Codes.	NUMBER	9	0	Y

2.13.58 T_FCOS_PR_TYPE_XRF

This table contains all the records for financial category of service calculation that only requires the fund code and the provider type to determine the category of service.

Column Name	Description	Type	Length	Precision	Primary Key
SAK_FIN_COS	This is unique key for the Financial Category of Service.	NUMBER	9	0	Y
SAK_FUND_CODE	This is the unique system assigned key to the Financial Fund Codes.	NUMBER	9	0	Y
CDE_PROV_TYPE	This is the provider type.	CHAR	2	0	Y

2.13.59 T_FICA_RATE

This is the federal FICA rate that should be applied during the calculation of a payment.

Column Name	Description	Type	Length	Precision	Primary Key
SAK_FICA_RATE	This is the unique key for a FICA rate.	NUMBER	9	0	Y
DTE_EFFECTIVE	This is the date that the FICA rate becomes effective.	NUMBER	8	0	N
DTE_END	This is the date that the FICA rate ends.	NUMBER	8	0	N
PT_FICA_RATE	This is the percentage rate for FICA.	NUMBER	6	4	N

2.13.60 T_FIN_BANK_ACCT

This entity will hold information about each of the bank accounts that are pertinent to the state.**T**his will include any accounts used for disbursements or deposits.

Column Name	Description	Type	Length	Precision	Primary Key
SAK_BANK_ACCT	The system assigned key that uniquely identifies a bank account within the interChange system.	NUMBER	9	0	Y
DSC_BANK_ACCT	The description of the bank account that will be shown on windows and reports.	CHAR	30	0	N
NUM_ABA_MICR	The state's bank number that is shown in magnetic ink at the bottom of the check.	CHAR	9	0	N
NUM_ACT_MICR	The state's account number that is shown in magnetic ink at the bottom of the check.	CHAR	18	0	N
NUM_ABA_EFT	The state's bank number that is sent on the EFT file to the bank.	CHAR	17	0	N

Column Name	Description	Type	Length	Precision	Primary Key
NUM_ACT_EFT	The state's account number that is sent on the EFT file to the bank.	CHAR	17	0	N
CDE_ACT_TYPE	This one byte indicator identifies the type of the bank account that a provider is using for Electronic Funds Transfers.**T**he valid values are 'C'hecking, 'S'avings.	CHAR	1	0	N
CDE_ACT_USAGE	A code that indicates how the account is used. U= disbursement, D= deposit, B=both.	CHAR	1	0	N

2.13.61 T_FIN_BUDGET

This table describes the financial budget entity. A financial budget defines an appropriation made by the state that is to be tracked by interChange.

Column Name	Description	Type	Length	Precision	Primary Key
SAK_BUDGET	The system assigned key that identifies a unique budget with interChange.	NUMBER	9	0	Y
CDE_BUDGET	An optional business code value used to identify the budget.**T**his code may be used for reporting or identifying this budget on feeds to external systems.	CHAR	4	0	N
DSC_BUDGET	A business description of the budget that will be used for reporting and windows.	CHAR	30	0	N
IND_CAP	This field indicates when the system should ensure that the amount spent is greater than the amount budgeted and begin holding claims because of it.	CHAR	1	0	N
IND_DISBURSE	Indicates if this budget can be used to disburse payments.	CHAR	1	0	N

Column Name	Description	Type	Length	Precision	Primary Key
CDE_DEPOSIT	Indicates if this budget can be updated with deposited funds from external entities. Valid values would include: N = Do not allow funds to be deposited into this budget, Y = Allow funds to be deposited for reporting only, but do not add them to the amount to be spent, S = Allow funds to be deposited and allow the deposited funds to be spent.	CHAR	1	0	N
CDE_RT_PYMT	Indicates if this budget can be updated with returned (or stopped) system payments. Valid values would include: N = Do not allow returned payments to be deposited into this budget, Y = Allow returned payments to be deposited for reporting only, but do not add them to the amount to be spent, S = Allow returned payments to be deposited and allow the deposited funds to be spent.	CHAR	1	0	N
CDE_RECOUP	Indicates if this budget can be updated with money recouped from an outstanding accounts receivable. Valid values would include: N = Do not allow recoupment to be deposited into this budget, Y = Allow recoupment to be deposited for reporting only, but do not add them to the amount to be spent, S = Allow recoupment to be deposited and allow the deposited funds to be spent.	CHAR	1	0	N

2.13.62 T_FIN_BUDG_ALT

This entity will allow the state to indicate any alternate budgets that are available to each indicated budget and the order they should be checked.

Column Name	Description	Type	Length	Precision	Primary Key
SAK_BUDGT_ASGN	The system assigned key that identifies a unique budget with interChange.	NUMBER	9	0	Y
SAK_BUDGT_ALT	The system assigned key that identifies a unique budget with interChange.	NUMBER	9	0	Y

Column Name	Description	Type	Length	Precision	Primary Key
NUM_HIERARCHY	If an assigned budget has multiple alternate budgets, this will determine the order in which they will be checked.	NUMBER	9	0	N

2.13.63 T_FIN_BUDG_DISP

This table shows the transactions affecting a budget.**T**he transactions can come from online or batch.

Column Name	Description	Type	Length	Precision	Primary Key
SAK_BUDGT_DISP	The system assigned key that identifies a unique budget disposition within interChange.	NUMBER	9	0	Y
SAK_BUDGET	The system assigned key that identifies a unique budget with interChange.	NUMBER	9	0	Y
SAK_FIN_PERIOD	The system assigned key that identifies a unique PERIOD with interChange.	NUMBER	9	0	Y
SAK_FIN_SCHED	The system assigned key that identifies a unique financial schedule within the interChange financial subsystem.	NUMBER	9	0	N
AT_DISP	This is the amount of the disposition for the budget.**T**hese values should not be negative.	NUMBER	11	2	N
DISPOSITION_TYPE	This is the type of disposition on the budget. Either a deposit or a withdrawal.	CHAR	1	0	N
DTE_DISPOSITION	This is the date the disposition entry was made.	NUMBER	8	0	N
DTE_POSTED	This is the date that the disposition was posted (added) to the budget.	NUMBER	8	0	N
REASON_IND	This is the reason the disposition occurred. P=Payment, R=Recovery, C=Claim Adjustment, D=Deposit, T=Transfer, A=Budget Adjustment	CHAR	1	0	N

Column Name	Description	Type	Length	Precision	Primary Key
SAK_TXN	This is the unique key of the transaction. It is used for research and balancing purposes.	NUMBER	9	0	N
CDE_TXN	This is the type code of the txn. It is only required when the sak_txn > 0. C = claim, E = Expenditure, M=Capitation. A = Acct Rec, H=Cash Receipt, V=Void, Default value = X.	CHAR	1	0	N
SAK_FUND_CODE	The fund code key for the transaction.	NUMBER	9	0	N
NUM_DTL	The detail number of the claim. Default is zero	NUMBER	4	0	N
CDE_BUDGT_TYPE	Type of budget used for the disposition (valid values are B - primary budget, A - alternate budget, P - parent budget).	CHAR	1	0	N

2.13.64 T_FIN_BUDG_GRP

This table shows the budget hierarchy entity. Budget accounts can be grouped into specific hierarchies. Each level of the budget hierarchy may or may not be capped.

Column Name	Description	Type	Length	Precision	Primary Key
SAK_BUDGT_PARENT	The system assigned key that identifies a unique budget with interChange.	NUMBER	9	0	Y
SAK_BUDGT_CHILD	The system assigned key that identifies a unique budget with interChange.	NUMBER	9	0	Y
DTE_EFFECTIVE	The effective date of the parent budget.	NUMBER	8	0	N
DTE_END	The end date of the parent budget.	NUMBER	8	0	N

2.13.65 T_FIN_BUDG_PERIOD

This table describes the periods that are associated with financial budgets.

Column Name	Description	Type	Length	Precision	Primary Key

Column Name	Description	Type	Length	Precision	Primary Key
SAK_BUDGET	The system assigned key that identifies a unique budget with interChange.	NUMBER	9	0	Y
SAK_FIN_PERIOD	The system assigned key that identifies a unique PERIOD with interChange.	NUMBER	9	0	Y
AT_BUDGET	The maximum amount that can be spent from this budget. An amount of zero indicates there is no cap on spending.	NUMBER	11	2	N
AT_FLAG	This is the amount that we should start flagging the budget as low on funds.**T**his can be used on reports as well as on windows.	NUMBER	11	2	N

2.13.66 T_FIN_CDE_ET_STATUS

Column Name	Description	Type	Length	Precision	Primary Key
CDE_STATUS_EFT	Code indicating the status of a provider's electronic funds transfer (EFT) account.**T**he valid values are the following: Pending (0),Pre-notification (1), Active (2), Canceled (3), Interrupt (4), Failed (5), Expired (6)	CHAR	1	0	Y
CDE_PROCESS_TYPE	Indicates whether code is system assigned (S) or manual assigned (M), or both (B).	CHAR	1	0	N
DSC_ET_STATUS	Text description of the status code.	VARCHAR2	30	0	N

2.13.67 T_FIN_CDE_UNIT

This table contains the codes and descriptions of the financial unit\department.

Column Name	Description	Type	Length	Precision	Primary Key
CDE_UNT_DEPT	Identifies the unit\department that created the financial transaction.	CHAR	2	0	Y
DSC_UNT_DEPT	The description of the financial unit\department.	VARCHAR	30	0	N

2.13.68 T_FIN_COS

This is the table that contains the Financial Category of Service values for the system.

Column Name	Description	Type	Length	Precision	Primary Key
SAK_FIN_COS	This is unique key for the Financial Category of Service.	NUMBER	9	0	Y
CDE_FIN_COS	This the code for the Financial Category of Service.	CHAR	3	0	N
DSC_FIN_COS	This the description of the Financial Category of Service.	CHAR	40	0	N

2.13.69 T_FIN_CYCLE

The financial cycle is defined as any breakout of claims/financial transactions that need a distinct payment/remittance advice for any single payee.

Column Name	Description	Type	Length	Precision	Primary Key
SAK_FIN_CYCLE	The system assigned key that identifies a unique financial cycle within interChange.	NUMBER	9	0	Y
CDE_FIN_CYCLE	An optional business code value used to identify the financial cycle.**T**his code may be used for reporting or identifying the financial cycle on feeds to external systems.	CHAR	4	0	N
DSC_FIN_CYCLE	A business description of the financial cycle that will be used for reporting and windows.	CHAR	30	0	N
NUM_RA_CURR	The last RA number to be assigned for this financial cycle.	NUMBER	9	0	N
SAK_RA_CURR	The last RA system assigned key to be assigned for this financial cycle.	NUMBER	9	0	N
DESC_SOT_RA_PGM	The sub module name of the program that will be called to format the sort key.	CHAR	30	0	N
DSC_PAPER_RA_PGM	The sub module name of the program that will be called to format the paper RA.	CHAR	30	0	N

Column Name	Description	Type	Length	Precision	Primary Key
DSC_ERA_PGM	The sub module name of the program that will be called to format the electronic RA.	CHAR	30	0	N
IND_ALLOW_EFT	An indicator to drive EFT processing. If the indicator is set to 'N', we will not check the provider to see if they are setup for EFT payments. If the indicator is set on 'Y', we will check the provider to see if they are setup for EFT payments.	CHAR	1	0	N
CDE_PAYMET_TYPE	This code is used to determine if the payment will be made by interChange or by an external system to interChange. (I = Internal, E = External)	CHAR	1	0	N
ID_SENDER_ST	This is the sender id that identifies the State program on the 835.	CHAR	30	0	N
NUM_TAX_ID_ST	This is the State's tax identification number which is displayed on the 835.	CHAR	12	0	N
NAM_PAYER_ST	This is the name by which the State will be identified on the 835.	CHAR	50	0	N
ADR1_RETURN_ST	This is the first address line of the State's return address that will be displayed on the 835.	CHAR	30	0	N
ADR2_RETURN_ST	This is the second address line of the State's return address that will be displayed on the 835.	CHAR	30	0	N
CITY_RETURN_ST	This is the city of the State's return address that will be displayed on the 835.	CHAR	15	0	N
STATE_RETURN_ST	This is the state code of the State's return address that will be displayed on 835.	CHAR	2	0	N

Column Name	Description	Type	Length	Precision	Primary Key
ZIP_RETURN_ST	This is the zip code of the State's return address that will be displayed on the 835.	CHAR	9	0	N
NUM_NATL_PLAN_ST	This is the national plan number of the State that will be displayed on the 835.	CHAR	30	0	N
CHK_ISS_NUM_DAYS	This is the number of days an CHECK can be issued from the process date or financial run date. (optional).**T**o not specify a CHECK date parameter will result in the default issue date which is the date of cycle.,	NUMBER	4	0	N
CHK_ISS_DAY	This is the specified day a check can be issued in relation to the process date or financial run date. (optional).**T**o not specify a date parameter the default issue date will be the date of cycle. M = Monday, T = Tuesday, W = Wednesday, H = Thursday, F= Friday.	CHAR	1	0	N
ET_ISS_NUM_DAYS	This is the number of days an EFT can be issued from the process date or financial run date. (optional).**T**o not specify a EFT date parameter will result in the default issue date which is the date of cycle.	NUMBER	4	0	N
ET_ISS_DAY	This is the specified day a check can be issued in relation to the process date or financial run date. (optional).**T**o not specify a date parameter the default issue date will be the date of cycle. M = Monday, T = Tuesday, W = Wednesday, H = Thursday, F= Friday.	CHAR	1	0	N

Column Name	Description	Type	Length	Precision	Primary Key
IND_DEFAULT	This is the default record for use in the system. A "Y" indicates default. All other records will contain a null value.	CHAR	1	0	N

2.13.70 T_FIN_CYCLE_BNK_XREF

This entity is used to tie the financial cycle to the state's disbursement bank account and indicate the range of payment numbers (check and EFT) to use when creating payments

Column Name	Description	Type	Length	Precision	Primary Key
SAK_BANK_ACCT	The system assigned key that uniquely identifies a bank account within the interChange system.	NUMBER	9	0	Y
SAK_FIN_CYCLE	The system assigned key that identifies a unique financial cycle within interChange.	NUMBER	9	0	N
SAK_PAY_NUM_RANGE	The system assigned key that uniquely identifies the payment number range in the system.	NUMBER	9	0	N
DTE_EFFECTIVE	The first date this bank account and check number range is effective for this financial cycle.	NUMBER	8	0	N
DTE_END	The last date this bank account and check number range is effective for this financial cycle.	NUMBER	8	0	N

2.13.71 T_FIN_CYCLE_HIST

This entity stores the historical information about a instance of batch financial cycle.

Column Name	Description	Type	Length	Precision	Primary Key
SAK_FIN_SCHED	The system assigned key that identifies a unique financial schedule within the interChange financial subsystem.	NUMBER	9	0	Y
DTE_RUN	The date that the schedule was executed.	NUMBER	8	0	Y

Column Name	Description	Type	Length	Precision	Primary Key
DTE_ISSUE_CHK	The payment issue date of the check.	NUMBER	8	0	N
DTE_ISSUE_EFT	The date of issue for EFTs.	NUMBER	8	0	N
STAT_TIME	The time the cycle started.	DATE	0	0	N
END_TIME	The time the cycle ended	DATE	0	0	N

2.13.72 T_FIN_CYCLE_TAX_INFO

This table contains the information needed for filling out IRS tax forms.

Column Name	Description	Type	Length	Precision	Primary Key
SAK_FIN_CYCLE	The system assigned key that identifies a unique financial cycle within interChange.	NUMBER	9	0	Y
CDE_FORM_TYPE	This uniquely identifies the tax form type such as W2 or 1099.	CHAR	4	0	Y
CDE_REC_TYPE	This uniquely identifies the tax record type and can correspond to a specific record type on a IRS tax file.	CHAR	1	0	Y
NUM_CTL	This is the IRS control name\number.	CHAR	5	0	N
NAM_TAX_NM1	This is the individual, company, payer, vendor or other name that will appear on the tax form.	CHAR	40	0	N
NAM_TAX_NM2	This is the secondary individual, company, payer, vendor or other name that will appear on the tax form.	CHAR	40	0	N
ADR_TAX_ADR1	This is the company, payer, vendor or other address that will appear on the tax form.	CHAR	40	0	N
ADR_TAX_CITY	This is the company, payer, vendor or other city that will appear on the tax form.	CHAR	40	0	N
ADR_TAX_STATE	This is the company, payer, vendor or other state that will appear on the tax form.	CHAR	2	0	N

Column Name	Description	Type	Length	Precision	Primary Key
ADR_TAX_ZIP	This is the company, payer, vendor or other zip that will appear on the tax form.	CHAR	5	0	N
ADR_TAX_ZIP4	This is the company, payer, vendor or other zip+4 that will appear on the tax form.	CHAR	4	0	N
NUM_PHONE_MAIN	This is the company, payer, vendor or other phone number that will appear on the tax form.	CHAR	10	0	N
NUM_PHONE_EXT	This is the company, payer, vendor or other phone extension that will appear on the tax form.	CHAR	5	0	N
NUM_TIN		CHAR	9	0	N
TT_TAX_EMAIL	This is the information that will be publish on the IRS tax file.**T**his is the email of the person who would be contacted for any questions.	CHAR	35	0	N
NAM_CONTACT	This is the information that will be publish on the IRS tax file.**T**his is the person who should be contacted for any questions.	CHAR	40	0	N

2.13.73 T_FIN_ET_ACCT

This table contains the valid status codes allowed for maintaining EFT account information.

Column Name	Description	Type	Length	Precision	Primary Key
SAK_FIN_CYCLE	The system assigned key that identifies a unique financial cycle within interChange.	NUMBER	9	0	Y
CDE_PAYEE_TYPE	Unique char value for payee types defined within financial.	CHAR	1	0	Y
SAK_PAYEE	This unique payee system assigned key associated with this record. It contains the sak of various entities such as sak_prov_loc, sak_recip, sak_carrier, and so on.	NUMBER	9	0	Y

Column Name	Description	Type	Length	Precision	Primary Key
CDE_TXN_TYPE	This indicates how the EFT account will be used.**T**he valid values are "W" - Withdrawals or "D" Deposits.	CHAR	1	0	Y
SAK_SHORT	This is the sequential number for the payee's EFT account.	NUMBER	4	0	Y
CDE_STATUS_EFT	Code indicating the status of a provider's electronic funds transfer (EFT) account.**T**he valid values are the following: Pending (0),Pre-notification (1), Active (2), Canceled (3), Interrupt (4), Failed (5), Expired (6)	CHAR	1	0	N
NUM_ABA	A unique number assigned to individual financial institutions for identification.	CHAR	9	0	N
NUM_ET_ACCT	This is the bank account number for the payees in which the payments are electronically transferred.	CHAR	17	0	N
IND_ACT_TYPE	This one byte indicator identifies the type of the bank account that a payee is using for Electronic Funds Transfers.**T**he valid values are 'C'hecking, 'S'avings, 'T'ransfer (State Transfer).	CHAR	1	0	N
DTE_EFFECTIVE	Effective date for an object. Used to signify the start of a span or period.	NUMBER	8	0	N
DTE_END	The date that this EFT segment is no longer in effect.	NUMBER	8	0	N
DTE_LAT_CHANGE	This is the date the EFT information was last changed.	NUMBER	8	0	N

2.13.74 T_FIN_ERROR_CODE

This is the code table that contains all the generic error message that can occur in financial. An example of the error codes are those that are used in the extractors to flush claims out do to data problems.

Column Name	Description	Type	Length	Precision	Primary Key

Column Name	Description	Type	Length	Precision	Primary Key
CDE_ERROR	This is the error code that is used to describe a specific financial transaction for reporting.	NUMBER	9	0	Y
DSC_ERROR	This is the short description of the error code used in standard reporting.	CHAR	100	0	N
DSC_ERROR_LONG	This is the detail description of the error code.	VARCHAR2	4000	0	N

2.13.75 T_FIN_FUND_CDE_RATE

This entity stores the relationship of the fund code and the rate. All records for a given sak_fund_code must equal a total of 100%

Column Name	Description	Type	Length	Precision	Primary Key
SAK_FUND_CODE	This is the unique system assigned key to the Financial Fund Codes.	NUMBER	9	0	Y
CDE_RATE_TYPE	This the unique code value that represents a code rate type. Code rate types are state, federal, local agencies.	CHAR	2	0	Y
PT_VALUE	The factor to determine the amount of the payment that should be allocated to another agency.	NUMBER	4	2	N
IND_WITHHOLD	A yes or no indicator to indicate whether the amount is to be withheld from the amount paid.**T**his amount would be reflected in the amount state share or amount withholding on a payment.	CHAR	1	0	N

2.13.76 T_FIN_FUND_CODE

This table contains that list of financial fund codes that are used in the system to categorize funds correctly in the financial reporting.

Column Name	Description	Type	Length	Precision	Primary Key
SAK_FUND_CODE	This is the unique system assigned key to the Financial Fund Codes.	NUMBER	9	0	Y

Column Name	Description	Type	Length	Precision	Primary Key
SAK_FUND_PAYER	The system assigned key that identifies a unique payer within interChange.	NUMBER	9	0	N
SAK_BUDGET	The system assigned key that identifies a unique budget with interChange.	NUMBER	9	0	N
CDE_FUND_CODE	This is the fund code that is used in financial reporting to correctly categorize funds (money).	CHAR	3	0	N
DSC_FUND	This is the description of the financial fund code that is used for reporting.	CHAR	50	0	N
DSC_FUND_LONG	This is the long description for the financial fund code.**T**his field allows for longer explanation and description of the code that is not intended for reports.	VARCHAR2	4000	0	N
SAK_BUDGT_DISB	This is an optional field which identifies the budget to use to pay expenses under this fund code.	NUMBER	9	0	N
SAK_BUDGT_DEP	This is an optional field which identifies the budget to use to record deposits from outside entities.	NUMBER	9	0	N
SAK_BUDGT_RET	This is an optional field which identifies the budget to use to record returned system checks.	NUMBER	9	0	N
SAK_BUDGT_RCP	This is an optional field which identifies the budget to use to record recoupment dollars from outstanding receivables.	NUMBER	9	0	N
IND_STATE_TXFR	Indicates if this fund code is to suppress the physical payment in favor of an inter-State agency accounting entry transfer.	CHAR	1	0	N

2.13.77 T_FIN_FUND_XREF

This table associates a fund payer entity with a financial payer entity for financial to process claims consistently.

Column Name	Description	Type	Length	Precision	Primary Key
SAK_FUND_PAYER	The system assigned key that identifies a unique payer within interChange.	NUMBER	9	0	Y
SAK_FIN_PAYER	The system assigned key that identifies a unique payer within interChange.	NUMBER	9	0	Y

2.13.78 T_FIN_INSTITUTION

This table contains all of the banks or other institutions where the payees request us to send their payments.

Column Name	Description	Type	Length	Precision	Primary Key
NUM_ABA	A unique number assigned to individual financial institutions for identification.	CHAR	9	0	Y
NAM_INV_CORP	The financial contact's address name.	CHAR	39	0	N
ADR_MAIL_STT_1	This is the first street line in an address	CHAR	30	0	N
ADR_MAIL_STT_2	This is the second street line in an address.	CHAR	30	0	N
ADR_MAIL_CITY	This is the city field in an address.	CHAR	30	0	N
ADR_MAIL_STATE	This is the abbreviated 2 character state code.	CHAR	2	0	N
ADR_MAIL_ZIP	The five digit zip code prefix in an address	CHAR	5	0	N
ADR_MAIL_ZIP_4	The four digit zip code suffix in an address	CHAR	4	0	N
NUM_PHONE	This is a phone number in the format area code + prefix + suffix.	CHAR	10	0	N
NUM_PHO_EXT	A phone number extension.	CHAR	4	0	N

2.13.79 T_FIN_MAN_REJECT

This table is used to reject/flush specific claims from financial due to issues in claims testing.**T**hese claims did not pass claims testing and, therefore, claims does not want the data to be passed through financial on put onto history.

Column Name	Description	Type	Length	Precision	Primary Key
SAK_CLAIM	The sak of the claim to be rejected from financial.	NUMBER	9	0	Y
CDE_ERROR	This is the error code that is used to describe a specific financial transaction for reporting. If this value is -1 then the default manual reject code will be taken.	NUMBER	9	0	N

2.13.80 T_FIN_NONPROV

This entity contains information about a non-base payee entity within the financial subsystem.**T**his type of payee entity does not exist within the system elsewhere and is defined only for processing within financial.**T**his may include lien holders, governmental agencies or any other type of payee required by the state that must be processed within financial but not defined elsewhere in the system.

Column Name	Description	Type	Length	Precision	Primary Key
SAK_NONPROV	System assigned key that uniquely identifies the name and address of a non-provider entity on the MMIS system. For example, the addresses of Lien Holders and Counties and non-provider entities to which we make Expenditure Payments.	NUMBER	9	0	Y
CDE_PAYEE_TYPE	Unique char value for payee types defined within financial.	CHAR	1	0	N
NAME	The legal name of the non-provider.	CHAR	39	0	N
ADR_STRET_1	The first line of the address of the non-provider.	CHAR	30	0	N
ADR_STRET_2	The second line of the address of the non-provider.	CHAR	30	0	N
ADR_CITY	The city of the non-provider.	CHAR	15	0	N
ADR_STATE	The state of the non-provider.	CHAR	2	0	N
ADR_ZIP_CODE	The zip code of the non-provider.	CHAR	5	0	N
ADR_ZIP_CODE_4	The zip code "plus four" of the non-provider.	CHAR	4	0	N
NUM_PHONE	The phone number of the non-provider.	CHAR	10	0	N

Column Name	Description	Type	Length	Precision	Primary Key
NUM_PHO_EXT	The phone extension of the non-provider.	CHAR	4	0	N

2.13.81 T_FIN_NUM_COR

This table contains the information needed to link imaged documents to their related financial transaction.

Column Name	Description	Type	Length	Precision	Primary Key
SAK_TXN	System assigned key to the accounts receivable.	NUMBER	9	0	Y
CDE_TXN	The code of the financial transaction	CHARACTER	1	0	Y
NUM_COR	This contains the reference number used to identify scanned documents.	VARCHAR2	13	0	N

2.13.82 T_FIN_PAYEE

This table contains the payees defined within the financial subsystem and the rules for processing that payee within financial.

Column Name	Description	Type	Length	Precision	Primary Key
CDE_PAYEE_TYPE	Unique char value for payee types defined within financial.	CHAR	1	0	Y
DSC_PAYEE	Describes the payee	CHAR	30	0	N
IND_EXPEND	This is a Y\N value. A value of 'Y' would indicate that the payee can receive expenditure payments. This primarily will be used by the expenditure window.	CHAR	1	0	N
IND_CHECK	CHAR(1) This is a Y\N value. A value of 'Y' would indicate that the payee type can receive a check.	CHAR	1	0	N
IND_AR	Indicates whether the payee should have ARs processed in financial. (Valid values: Y or N)	CHAR	1	0	N
IND_1099	Indicates whether a payee should have 1099 processing in financial. (Valid values: Y or N)	CHAR	1	0	N

Column Name	Description	Type	Length	Precision	Primary Key
IND_EARNINGS	Indicates whether a payee should have earnings in financial. (Valid values: Y or N)	CHAR	1	0	N
IND_LIEN	Indicates whether a payee should have lien processing in financial. (Valid values: Y or N)	CHAR	1	0	N
IND_CASH	Indicates whether a payee should have cash receipt processing in financial. (Valid values: Y or N)	CHAR	1	0	N
IND_EFT	Indicates whether a payee should have eft processing in financial. (Valid values: Y or N)	CHAR	1	0	N
IND_BASE_ENTITY	This indicates if the payee type is defined in the base system or if the payee type is defined as a non-provider within financial. (Valid values: Y or N)	CHAR	1	0	N

2.13.83 T_FIN_PAYMENT

This table will no longer exist. SeeT_CHECK

Column Name	Description	Type	Length	Precision	Primary Key
CHECK_SAK	The unique system assigned key that identifies a payment that originates from the MMIS.	NUMBER	9	0	Y
SAK_BANK_ACCT	The system assigned key that uniquely identifies a bank account within the interChange system.	NUMBER	9	0	N
NUM_CHECK_EXTERNAL	The number assigned to the payment that is externally displayed to other parties.**T**his could be the MICR number on the check or the EFT number sent to the bank.**T**his number is significant in that it needs to populate the TRN02 attribute on the 835 file.	CHAR	9	0	N

Column Name	Description	Type	Length	Precision	Primary Key
DTE_ISSUE	The date displayed on the check or EFT record.	NUMBER	8	0	N
CDE_STATUS	The status of the payment.This could be issued, voided, stopped or cleared.	CHAR	1	0	N
AT_CHECK	The amount of the payment.	NUMBER	11	2	N
CDE_TYPE	The type of payment.This could be check, EFT, wire transfer, or state transfer.	CHAR	1	0	N
NUM_CHECK_ORIG	If the check is a reissue, this will indicate the original check number being replaced.	CHAR	9	0	N

2.13.84 T_FIN_PERIOD

This entity holds the attributes of a financial period. A financial period is a period in time in which a process or record is valid. An example may be a fiscal period or a calendar year.

Column Name	Description	Type	Length	Precision	Primary Key
SAK_FIN_PERIOD	The system assigned key that identifies a unique PERIOD with interChange.	NUMBER	9	0	Y
CDE_PERIOD_TYPE	A unique value that identifies the financial period type in the system.	CHAR	4	0	N
DTE_PERIOD_EFF	The beginning date of the defined period.	NUMBER	8	0	N
DTE_PERIOD_END	The ending date of the defined period.	NUMBER	8	0	N

2.13.85 T_FIN_PERIOD_TYPE

The entity describes the type of the period.

Column Name	Description	Type	Length	Precision	Primary Key
CDE_PERIOD_TYPE	A unique value that identifies the financial period type in the system.	CHAR	4	0	Y

Column Name	Description	Type	Length	Precision	Primary Key
DSC_PERIOD_TYPE	A description of the type of period as it will show on a report or window.	VARCHAR	40	0	N

2.13.86 T_FIN_PROCESS_AR

This is a table used within the financial batch cycle for batch processing only.**T**he table is emptied and loaded with each financial batch cycle. It contains all account receivables that will be processed in the financial batch cycle.

Column Name	Description	Type	Length	Precision	Primary Key
SAK_ACT_REC	System assigned key to the accounts receivable.	NUMBER	9	0	Y
NUM_CONTROL_AR	Unique number assigned to track accounts receivables.**T**his number will be used to file any documentation related to the accounts receivable.**T**he format of the number is RRYYJJJBBBSSS.	CHAR	13	0	N
DTE_EFFECTIVE	Date the accounts receivable will take effect.**T**his date will usually be the same as the date added, but it allows the accounts receivable recoupment process to be delayed until a future date.	NUMBER	8	0	N
DTE_ADDED	Date the accounts receivable was created.**T**his date will be used in determining the age of the accounts receivable.	NUMBER	8	0	N
AT_SETUP	The original amount of the accounts receivable to be collected from a provider.	NUMBER	13	2	N
AT_IN_PROCESS	The amount of recoupment that is currently in process for the cycle on the daughter claim.	NUMBER	13	2	N
AT_IN_PROCESS_MOM	The amount of recoupment that is currently in process for the cycle on the mom claim.	NUMBER	13	2	N

Column Name	Description	Type	Length	Precision	Primary Key
AT_MAX_RECOUP_AR	The maximum amount of the account receivable that can be recouped in a payment cycle.	NUMBER	9	2	N
PT_RECOUP	The maximum percentage of the account receivable that can be recouped in a payment cycle.	NUMBER	4	2	N
CDE_REASON_FOUR	A four digit code assigned to describe the reason for setting up the accounts receivable.	CHAR	4	0	N
SAK_FUND_CODE	This is the unique system assigned key to the Financial Fund Codes.	NUMBER	9	0	N
NUM_ICN	Number assigned to a claim processed in the system; used for control purposes. Unique number in format RRYYDDDBBBSSS: RR - region, YYDDD - julian date, BBB - batch number, SSS - sequence number.	CHAR	13	0	N
AT_DISPOSITION	This is the amount of disposition that has occurred on the AR.	NUMBER	13	2	N
AT_DISPOSITION_MOM	This is the amount of disposition that has occurred on the mother AR	NUMBER	13	2	N
AT_INTEREST	This is the amount of interest on the AR.	NUMBER	9	2	N
AT_APPLIED_INTEREST	This is the amount of interest that has been posted to the original AR.	NUMBER	9	2	N
CDE_REASON_TYPE	This is the type of AR used in batch.	CHAR	1	0	N
SAK_PAYEE	System assigned key that uniquely identifies the provider enrollment tracking.	NUMBER	9	0	N
CDE_PAYEE_TYPE	Unique char value for payee types defined within financial.	CHAR	1	0	N

Column Name	Description	Type	Length	Precision	Primary Key
SAK_FIN_SCHED		NUMBER	9	0	N
PROCESS_IND	This indicator is used to indicate whether a transaction should be moved to the permanent AR table. A value of 'Y' would indicate the transaction can be moved. Default value is 'N'.	CHAR	1	0	N
ZIP_CODE_5	Provider zip code. Used to sort records for the RA.	CHAR	5	0	N
ZIP_CODE_4	Provider zip code. Used to sort records for the RA.	CHAR	4	0	N
SAK_SHOT_COS	A system assigned key (SAK) classifying a rule that qualifies a COS.	NUMBER	4	0	N
NUM_HIERARCHY	This field determines the order in which an AR is recouped.	NUMBER	4	0	N
CDE_RECOUP_FREQ	This field indicates the frequency by which the AR recoupment occurs. ("M" = Monthly, "W" = Weekly, "Q" = Quarterly)	CHAR	1	0	N
CDE_REPAY_TYPE	This field indicates the type of repayment options. ("F" = Fixed, "X" = Flexible)	CHAR	1	0	N
CDE_UNT_DEPT	Identifies the unit\department that created the financial transaction.	CHAR	2	0	N
DTE_AR_LIABILITY	This is the date of liability of the AR when it was first established.	NUMBER	8	0	N
DTE_DEFICIENCY	This is the date the AR is deficient based on a repayment plan.	NUMBER	8	0	N
DTE_REVIEW_PER_BEGIN	This is the review period begin date for which this transaction applies.	NUMBER	8	0	N

Column Name	Description	Type	Length	Precision	Primary Key
DTE_REVIEW_PER_END	This is the review period end date for which this transaction applies.	NUMBER	8	0	N
DTE_DUE	This is the date which the AR must be paid in full.	NUMBER	8	0	N

2.13.87 T_FIN_PROCESS_AR_DISP

This is a table used within the financial batch cycle for batch processing only.**T**he table is emptied and loaded with each financial batch cycle. It contains all AR dispositions that are to be processed in the cycle.

Column Name	Description	Type	Length	Precision	Primary Key
SAK_DISPOSITION	System assigned key of the accounts receivable disposition.	NUMBER	9	0	Y
SAK_BUDGET	The system assigned key that identifies a unique budget with interChange.	NUMBER	9	0	N
SAK_ACT_REC	System assigned key to the accounts receivable.	NUMBER	9	0	N
DTE_GENERIC	Date the disposition was applied to the accounts receivable.	NUMBER	8	0	N
AMT	The amount of the disposition that was applied to the accounts receivable.	NUMBER	13	2	N
CDE_REASON_FOUR	The unique four digit code to define the AR disposition reason.	CHAR	4	0	N
SAK_FUND_CODE	This is the unique system assigned key to the Financial Fund Codes.	NUMBER	9	0	N
DTE_PAYMET_ISSUE	This is the financial payment issue date if the disposition was created during a financial cycle. It is the date of the disposition if the disposition was created by the online (manual disposition).	NUMBER	8	0	N

Column Name	Description	Type	Length	Precision	Primary Key
SAK_FIN_SCHED	This field contains the sak of the schedule (cycle) under which this disposition was processed. Default value is -1.**T**his may be always the default value since not all cash dispositions are processed in batch	NUMBER	9	0	N
PROCESS_IND		CHAR	1	0	N
SAK_PAYEE	System assigned key that uniquely identifies the payee.	NUMBER	9	0	N
CDE_PAYEE_TYPE	Unique char value for payee types defined within financial.	CHAR	1	0	N
CDE_UNT_DEPT	Identifies the unit\department that created the financial transaction.	CHAR	2	0	N
IND_STATUS	The status indicates whether the AR disp is processed or voided.	CHAR	1	0	N

2.13.88 T_FIN_PROCESS_AR_XREF

This is a table used within the financial batch cycle for batch processing only.**T**he table is emptied and loaded with each financial batch cycle. It contains all claim related AR cross references that are to processed in the cycle.

Column Name	Description	Type	Length	Precision	Primary Key
SAK_ACT_REC	System assigned key to the accounts receivable.	NUMBER	9	0	Y
SAK_CLAIM_ADJ	System assigned key of the daughter claim.	NUMBER	9	0	N
NUM_ICN_MOM	This is the field that is used to identify the claim that is having funds recouped from. This is also what the providers see on the RA to identify the AR if the AR is claim related.	CHAR	13	0	N

Column Name	Description	Type	Length	Precision	Primary Key
PROCESS_IND	This indicator is used to indicate whether a transaction should be moved to the permanent AR table. A value of 'Y' would indicate the transaction can be moved. Default value is 'N'	VARCHAR2	18	0	N

2.13.89 T_FIN_PROCESS_BUDG_DISP

This is a table used within the financial batch cycle for batch processing only.**T**he table is emptied and loaded with each financial batch cycle. It contains all budget dispositions that are to be processed in the cycle.

Column Name	Description	Type	Length	Precision	Primary Key
SAK_BUDGT_DISP	The system assigned key that identifies a unique budget disposition within interChange.	NUMBER	9	0	Y
SAK_BUDGET	The system assigned key that identifies a unique budget with interChange.	NUMBER	9	0	Y
SAK_FIN_PERIOD	The system assigned key that identifies a unique PERIOD with interChange.	NUMBER	9	0	Y
AT_DISP	This is the amount of the disposition for the budget.**T**hese values should not be negative.	NUMBER	11	2	N
DISPOSITION_TYPE	This is the type of disposition on the budget. Either a deposit or a withdrawal.	CHAR	1	0	N
DTE_DISPOSITION	This is the date the disposition entry was made.	NUMBER	8	0	N
DTE_POSTED	This is the date that the disposition was posted (added) to the budget.	NUMBER	8	0	N
REASON_IND	This is the reason the disposition occurred. P=Payment, R=Recovery, C=Claim Adjustment, D=Deposit, T=Transfer, A=Budget Adjustment	CHAR	1	0	N

Column Name	Description	Type	Length	Precision	Primary Key
SAK_TXN	This is the unique key of the transaction. It is used for research and balancing purposes.	NUMBER	9	0	N
CDE_TXN	This is the type code of the txn. It is only required when the sak_txn > 0. C = claim, E = Expenditure, M=Capitation. A = Acct Rec, H=Cash Receipt, V=Void, Default value = X.	CHAR	1	0	N
SAK_FUND_CODE	The fund code key for the transaction.	NUMBER	9	0	N
NUM_DTL	The detail number of the claim. Default is zero	NUMBER	4	0	N
SAK_FIN_SCHED	The system assigned key that identifies a unique financial schedule within the interChange financial subsystem.	NUMBER	9	0	N
CDE_BUDGT_TYPE	Type of budget used for the disposition (valid values are B - primary budget, A - alternate budget, P - parent budget).	CHAR	1	0	N

2.13.90 T_FIN_PROCESS_CASH_DISP

This is a table used within the financial batch cycle for batch processing only.**T**he table is emptied and loaded with each financial batch cycle. It contains all cash dispositions that are to be processed in the cycle.

Column Name	Description	Type	Length	Precision	Primary Key
SAK_CASH_RECEIPT	System assigned key that uniquely identifies any check submitted to the account from an outside source.	NUMBER	9	0	Y
NUM_SEQ_BATCH	Number that uniquely identifies each individual disposition which was applied to a cash receipt.	NUMBER	9	0	Y

Column Name	Description	Type	Length	Precision	Primary Key
AT_DISPOSITION	The amount being applied from a check for a single transaction (adjustment, overpayment return, accounts receivable payment, and so on.).	NUMBER	13	2	N
IND	Indicates when a transaction is written to general ledger. After it has been written, no updates will be allowed to the disposition.	CHAR	1	0	N
DTE_POSTED	The date the cash receipt disposition was posted.**T**his date will determine which week the disposition will be reported in.	NUMBER	8	0	N
DTE_ASSIGNED	The date this portion of the cash receipt was originally paid out.	NUMBER	8	0	N
SAK_PAYEE	This is the payee associated with this portion of the cash receipt.**T**his field will store the sak of various entities such as sak_prov_loc, sak_recip, sak_carrier, and so on..	NUMBER	9	0	N
CDE_PAYEE_TYPE	Unique char value for payee types defined within financial.	CHAR	1	0	N
DTE_PROCESSED	This field contains the date on which the cash disposition was processed in batch. This is used during the extraction and balancing of the cash disposition	NUMBER	8	0	N
SAK_FIN_SCHED	This field contains the sak of the schedule (cycle) under which this disposition was processed. Default value is 0 or -1. This may be always the default value since not all cash dispositions are processed in batch	NUMBER	9	0	N

Column Name	Description	Type	Length	Precision	Primary Key
SAK_FUND_CODE	This is the unique system assigned key to the Financial Fund Codes.	NUMBER	9	0	N
CDE_REASON_FOUR	Code used to track the reason a transaction is done.	CHAR	4	0	N
ZIP_CODE_5	Provider zip code. Used to sort records for the RA.	CHAR	5	0	N
ZIP_CODE_4	Provider zip code. Used to sort records for the RA.	CHAR	4	0	N

2.13.91 T_FIN_PROCESS_DNTL

This is a table used within the financial batch cycle for batch processing only.**T**he table is emptied and loaded with each financial batch cycle.**T**his table has the saks of all the paid and denied dental claims that will be processed through financial.

Column Name	Description	Type	Length	Precision	Primary Key
SAK_CLAIM	This is the sak of the denial claim that made it through financial.	NUMBER	9	0	Y
SAK_FUND_PAYER	The system assigned key that identifies a unique payer within interChange.	NUMBER	9	0	N
CDE_CLM_STATUS	This is the status of the claim (P - Paid, D - Denied)	CHAR	1	0	N
PROCESS_IND	This indicator is used to indicate whether a transaction should be moved to history. A value of 'Y' would indicate the transaction can be moved. Default value is 'N'.	CHAR	1	0	N
SAK_FIN_SCHED	The system assigned key that identifies a unique financial schedule within interChange.	NUMBER	9	0	N

2.13.92 T_FIN_PROCESS_LIEN

This is a table used within the financial batch cycle for batch processing only.**T**he table is emptied and loaded with each financial batch cycle.**T**his batch table is used to stored the saks of liens that are to be closed each cycle.**T**his table is truncated at the top of each financial cycle.

Column Name	Description	Type	Length	Precision	Primary Key

Column Name	Description	Type	Length	Precision	Primary Key
SAK_LIEN	System assigned key that uniquely identifies a lien against a provider on the MMIS system.	NUMBER	9	0	Y

2.13.93 T_FIN_PROCESS_LIEN_DISP

This is a table used within the financial batch cycle for batch processing only.**T**he table is emptied and loaded with each financial batch cycle.**T**his batch only table contains a list of lien dispositions that are applied to a lien that positively or negatively adjust the balance of the lien.

Column Name	Description	Type	Length	Precision	Primary Key
SAK_DISPOSITION	System assigned key that uniquely identifies a disposition entry associated to a lien on the MMIS system.	NUMBER	9	0	Y
SAK_LIEN	System assigned key that uniquely identifies a lien against a provider on the MMIS system.	NUMBER	9	0	N
NUM_REFERENCE	Document number assigned by a clerk that identifies any documentation received regarding a manually entered disposition. For a claim cycle entry, the claim number is stored in this field to relate the disposition to the claim.	CHAR	20	0	N
CDE_DISP_REASON	Code used to identify the reason for the disposition against the lien.	CHAR	4	0	N
AT_DISPOSITION	Amount of the disposition against the original lien.	NUMBER	10	2	N
DTE_ADDED	Date that the disposition was added to the system.	NUMBER	8	0	N
DTE_PAYMET_ISSUE	This is the financial payment issue date if the disposition was created during a financial cycle. It is the date of the disposition if the disposition was created by the online (manual disposition).	NUMBER	8	0	N

Column Name	Description	Type	Length	Precision	Primary Key
SAK_FIN_SCHED	The system assigned key that identifies a unique financial schedule within the interChange financial subsystem.	NUMBER	9	0	N

2.13.94 T_FIN_PROCESS_PHRM

This is a table used within the financial batch cycle for batch processing only.**T**he table is emptied and loaded with each financial batch cycle.**T**his table has the saks of all the paid and denied pharmacy claims that will be processed through financial.

Column Name	Description	Type	Length	Precision	Primary Key
SAK_CLAIM	This is the sak of the pharmacy claim that made it through financial.	NUMBER	9	0	Y
SAK_FUND_PAYER	The system assigned key that identifies a unique payer within interChange.	NUMBER	9	0	N
CDE_CLM_STATUS	This is the status of the claim (P - Paid, D - Denied)	CHAR	1	0	N
PROCESS_IND	This indicator is used to indicate whether a transaction should be moved to history. A value of 'Y' would indicate the transaction can be moved. Default value is 'N'.	CHAR	1	0	N
SAK_FIN_SCHED	The system assigned key that identifies a unique financial schedule within interChange.	NUMBER	9	0	N

2.13.95 T_FIN_PROCESS_PHYS

This is a table used within the financial batch cycle for batch processing only.**T**he table is emptied and loaded with each financial batch cycle.**T**his table has the saks of all the paid and denied physician claims that will be processed through financial.

Column Name	Description	Type	Length	Precision	Primary Key
SAK_CLAIM	This is the sak of the physician claim that made it through financial.	NUMBER	9	0	Y
SAK_FUND_PAYER	The system assigned key that identifies a unique payer within interChange.	NUMBER	9	0	N

Column Name	Description	Type	Length	Precision	Primary Key
CDE_CLM_STATUS	This is the status of the claim (P - Paid, D - Denied)	CHAR	1	0	N
SAK_FIN_SCHED	The system assigned key that identifies a unique financial schedule within interChange.	NUMBER	9	0	N
PROCESS_IND	This indicator is used to indicate whether a transaction should be moved to history. A value of 'Y' would indicate the transaction can be moved. Default value is 'N'.	CHAR	1	0	N

2.13.96 T_FIN_PROCESS_PROV_ID

This is a table used within the financial batch cycle for batch processing only.**T**he table is emptied and loaded with each financial batch cycle. It contains all provider ID records.**T**his table should not be used in online processing since the data on the table is only updated each night prior to the financial batch cycle.

Column Name	Description	Type	Length	Precision	Primary Key
SAK_PROV_LOC	This is the system assigned key for the provider location.	NUMBER	9	0	Y
ID_PROV_PRIMARY	This is the ID of the provider that will be used throughout the financial cycle for use on reports internally.	CHAR	15	0	N
CDE_PRIMARY_TYPE	The is the type of ID that is being used in the Primary ID field.**T**his is typically (DFT) Default, (NPI), (MCD) Medicaid.	CHAR	3	0	N
ID_PROV_NPI	This is the NPI id associated with the provider location record.	CHAR	15	0	N
ID_PROV_DEFAULT	This is the default ID on file for the provider location record.	CHAR	15	0	N
ID_PROV_MCD	This is the Medicaid ID for the provider location record.	CHAR	15	0	N

Column Name	Description	Type	Length	Precision	Primary Key
ID_PROV_OTHER	This is an alternative ID for the provider location record.**T**his is to be used as needed within the batch cycle.	CHAR	15	0	N
NAM_PAY_TO_PROV	This is the "P"ay To Name associated with the provider location record.	VARCHAR2	50	0	N
IND_NAME_TYPE	This is an indicator of whether a name is that of a person or an organization.**T**he current valid values are: B - Business P - Personal Name	CHAR	1	0	N
SAK_PAY_TO_ADDRESS	This is the key that identifies the "P"ay To address for the provider location record.	NUMBER	9	0	N
SAK_PROV	System assigned key to identify a provider group.	NUMBER	9	0	N
DTE_ARA_EFF	This field indicates the date that a provider became eligible to receive an automated remittance advice.	NUMBER	8	0	N
DTE_END_PAPER_RA	This date indicates when a provider stops receiving paper copies of the RA.	NUMBER	8	0	N
IND_SUPPRESS_RA	Indicates whether the RA should be suppressed if the only thing there is to report on the RA is account receivables.	CHAR	1	0	N
IND_FICA	Indicates whether this provider should have FICA computed on it or not. The default will be "No".	CHAR	1	0	N

2.13.97 T_FIN_PROCESS_PYMT

This is a table used within the financial batch cycle for batch processing only.**T**he table is emptied and loaded with each financial batch cycle.**T**his a duplicate of the T_CHECK table that is used for reporting the Financial cycle information.**T**his table allows for reporting on the payments made before the batch financial cycle is complete.**T**he financial batch cycle will be run to the point that the payments are calculated and loaded to this table.**T**he data on this table is valid for only the time between the financial batch cycles. It is truncated and reload during each financial cycle.

Column Name	Description	Type	Length	Precision	Primary Key
CHECK_SAK	This is the unique key for a payment.	NUMBER	9	0	Y
NUM_CHECK	This is the payment/check number for the payment.	CHAR	9	0	N
CDE_PAY_TYPE	Code field to store an 'E' for EFT, 'T' for State Transfer, or 'C' for check. Used to designate the payment type.	CHAR	1	0	N
TOTAL_AT_PAID	This is the amount of the payment.	NUMBER	11	2	N
	This is the code that identifies what type of person or organization is being used. **T**he following are the valid values : C - TPL Carrier, O - Other, R - Recipient, Y - County, P - Provider.	CHAR	1	0	N
SAK_PAYEE	This is the system assigned key for the person/organization that is receiving the payment.	NUMBER	9	0	N
DTE_ISSUE	This is the date that the payment was issued.	NUMBER	8	0	N
CDE_STATUS1	This is the status code used on the T_CHECK andT_PAYMET_TMP tables. Examples are: An 'I' would indicate the check has been issued, a 'V' indicates a VOID, an 'R' indicates the check was reissued, a 'C' indicates a check has CLEARED the bank, an 'S' indicates Stopped and an 'X' for Cancelled by Statute. Please see the table for the full list of values.	CHAR	1	0	N

Column Name	Description	Type	Length	Precision	Primary Key
SAK_FIN_SCHED	The system assigned key that identifies a unique financial schedule within the interChange financial subsystem.	NUMBER	9	0	N
DTE_CYCLE	This is the date of the batch cycle in which the payment\RA was generated.	NUMBER	8	0	N

2.13.98 T_FIN_PROCESS_PYT_XREF

This is a table used within the financial batch cycle for batch processing only.**T**he table is emptied and loaded with each financial batch cycle.**T**his a duplicate of the T_CHCK _CLM_XREF table that is used for reporting the Financial cycle information.**T**his table was added to allow for reporting to be done on the payments before the financial batch cycle is complete.**T**he financial cycle will be run to the point the payments are calculated and loaded to this table.**T**he data on this table is valid for only the time between the financial batch cycles. It is truncated and reload during each financial cycle.

Column Name	Description	Type	Length	Precision	Primary Key
CHECK_SAK	The unique system assigned key that identifies a remittance advice\letter in the system.**T**he actual check is onT_fin_payment.	NUMBER	9	0	Y
SAK	System assigned key for the financial transaction. An example of this would be a claim SAK.	NUMBER	9	0	Y
CDE	Code that identifies the type of txn (CLAIM TYPE or Financial Txn) that required a payment.**T**his code may be any of the claim types (D,M,B,H,I,L,O,P,Q,A,C) OR financial txns (R (Acct Recs), S (expenditures), V(capitation), X (Lien recovery), F (FICA reduction)	CHAR	1	0	Y
NUM_DTL	This is the detail number of the claim if the transaction is a claim. For a claim, 0 would indicate that the claim was paid at the header and not the detail level.	NUMBER	4	0	Y
SAK_FUND_CODE	This is the unique system assigned key to the Financial Fund Codes.	NUMBER	9	0	N

Column Name	Description	Type	Length	Precision	Primary Key
SAK_FIN_COS	This is unique key for the Financial Category of Service.	NUMBER	9	0	N
AT_PAID	This is the amount that the transaction contributed to the payment.	NUMBER	10	2	N
AT_STATE_SHARE	This is the amount of the state share for the transaction.	NUMBER	10	2	N
SAK_PUB_HLTH	System assigned internal key for a medical assistance program.	NUMBER	9	0	N

2.13.99 T_FIN_PROCESS_SCHED

This is a table used within the financial batch cycle for batch processing only.**T**he table is emptied and loaded with each financial batch cycle. It contains schedules that are to be processed in the batch cycle.

Column Name	Description	Type	Length	Precision	Primary Key
SAK_FIN_CYCLE	The system assigned key that identifies a unique financial cycle within the interChange financial subsystem.	NUMBER	9	0	Y
SAK_FIN_SCHEDULE	The system assigned key that identifies a unique financial schedule within the interChange financial subsystem.	NUMBER	9	0	Y
CDE_REC_TYPE	The code for a particular type of claim or financial transaction that will be selected for the schedule. For example, D = Claim Dental transactions and E = Financial Expenditure transactions. Z = the default for selecting all claim types for the claim category.	CHAR	1	0	N
CDE_TXN	The category of transactions and payers selected for a financial schedule.**T**he categories are: C = Claim, F = Financial, P = Payer.	CHAR	1	0	N

Column Name	Description	Type	Length	Precision	Primary Key
CDE_STATUS_1	The status of a transaction type selected for a schedule. Values for claim transaction types are: P = Paid, D = Denied, S = Suspended. Values for financial transaction type expenditure are: M = Manual, D = Immediate Processing, R = Regular Processing.	CHAR	1	0	N
CDE_STATUS_2	The status of a transaction type selected for a schedule. Values for claim transaction types are: P = Paid, D = Denied, S = Suspended. Values for financial transaction type expenditure are: M = Manual, D = Immediate Processing, R = Regular Processing.	CHAR	1	0	N
CDE_STATUS_3	The status of a transaction type selected for a schedule. Values for claim transaction types are: P = Paid, D = Denied, S = Suspended. Values for financial transaction type expenditure are: M = Manual, D = Immediate Processing, R = Regular Processing.	CHAR	1	0	N
CDE_TXN_TYPE	The code for a particular type of claim or financial transaction that will be selected for the schedule. For example, D = Claim Dental transactions and E = Financial Expenditure transactions. Z = the default for selecting all claim types for the claim category.	CHAR	1	0	N
SAK_FUND_PAYER	The system assigned key that identifies a unique payer within interChange.	NUMBER	9	0	N
IND_AR_RECOUP	This field indicates if a schedule is to be included in the AR recoupment process.	CHAR	1	0	N

Column Name	Description	Type	Length	Precision	Primary Key
IND_PROCESS_HOLD	This field indicates if a schedule is to be included in the payment hold and prudent pay process.	CHAR	1	0	N
IND_PROCESS_LIENS	This field indicates if a schedule is to be included in the lien process.	CHAR	1	0	N
IND_PROCESS_SANCTIONS	This field indicates if a schedule is to be included in the sanction process.	CHAR	1	0	N
IND_PROCESS_WITHHOLDS	This field indicates if a schedule is to be included in the withholding process.	CHAR	1	0	N

2.13.100 T_FIN_PROCESS_UB92

This is a table used within the financial batch cycle for batch processing only.**T**he table is emptied and loaded with each financial batch cycle.**T**his table has the saks of all the paid and denied UB92 claims that will be processed through financial.

Column Name	Description	Type	Length	Precision	Primary Key
SAK_CLAIM	This is the sak of the UB92 claim that made it through financial.	NUMBER	9	0	Y
SAK_FUND_PAYER	The system assigned key that identifies a unique payer within interChange.	NUMBER	9	0	N
CDE_CLM_STATUS	This is the status of the claim (P - Paid, D - Denied)	CHAR	1	0	N
PROCESS_IND	This indicator is used to indicate whether a transaction should be moved to history. A value of 'Y' would indicate the transaction can be moved. Default value is 'N'.	CHAR	1	0	N
SAK_FIN_SCHED	The system assigned key that identifies a unique financial schedule within interChange.	NUMBER	9	0	N

2.13.101 T_FIN_PRUDET_PAY

This table stores data related to the prudent pay process.

Column Name	Description	Type	Length	Precision	Primary Key

Column Name	Description	Type	Length	Precision	Primary Key
SAK_PRUD_PAY	The system assigned key that identifies a unique prudent pay record within the interChange financial subsystem.	NUMBER	9	0	Y
SAK_FIN_CYCLE	The system assigned key that identifies a unique financial cycle within interChange.	NUMBER	9	0	N
NUM_DAYS	The number of days for prudent payment.**T**his is the number of calendar days before a payment is sent for a claim. It is calculated from the submit date.	NUMBER	4	0	N
DTE_EFFECTIVE	This is the date that the prudent payment record is effective.	NUMBER	8	0	N
DTE_END	This is the date that the prudent payment record is no longer effective.	NUMBER	8	0	N
DTE_ADDED	This is the date the record was added to the table.	NUMBER	8	0	N

2.13.102 T_FIN_PRU_PAY_CLM

This is the entity that stores the relationship between a prudent pay occurrence and claim types.

Column Name	Description	Type	Length	Precision	Primary Key
SAK_PRUD_PAY	The system assigned key that identifies a unique prudent pay record within the interChange financial subsystem.	NUMBER	9	0	Y
CDE_CLM_TYPE	Value for the type of claim that can be processed in the MMIS system.	CHAR	1	0	Y

2.13.103 T_FIN_RATE_TYPE

This table stores the rate types for fund codes. A rate type typically is an agency or some entity that is involved with the funding of payments.**T**his can be the state, federal or local government.

Column Name	Description	Type	Length	Precision	Primary Key
CDE_RATE_TYPE	This the unique code value that represents a code rate type. Code rate types are state, federal, local agencies.	CHAR	2	0	Y

Column Name	Description	Type	Length	Precision	Primary Key
DESC_RATE	This is the description of the cde_rate_type.	VARCHAR	80	0	N

2.13.104 T_FIN_REGION_RULES

This table contains all of the banks or other institutions where the providers or MCOs request us to send their payments.

Column Name	Description	Type	Length	Precision	Primary Key
NUM_REGION	Classification of the media on which a claim is submitted into the MMIS system or the type of transaction performed on a claim that already exists in the MMIS system.	CHAR	2	0	Y
CDE_PROCESS_RULE	This indicator tells financial how to process the claim within financial. "H" = History Only, "R" = Report Only, "A" = Standard adjustment processing, "C" = Cash adjustment	CHAR	1	0	N

2.13.105 T_FIN_REMIT

This table contains the information about individual remittance advice records generated out of the MMIS.

Column Name	Description	Type	Length	Precision	Primary Key
SAK_REMIT	The unique id that identifies an RA.	NUMBER	9	0	Y
DTE_CREATED	The date the RA was generated	NUMBER	8	0	N
CDE_IND_835	This field indicates if there was an 835 transaction created for this RA.	CHAR	1	0	N
NUM_PAGES	This field contains the total number of pages produced for this RA.	NUMBER	6	0	N
CDE_PAYEE_TYPE	Unique char value for payee types defined within financial.	CHAR	1	0	N
SAK_PAYEE	System assigned key that uniquely identifies a payee. Such as provider, recipient, carrier, and so on.	NUMBER	9	0	N

Column Name	Description	Type	Length	Precision	Primary Key
CDE_STATUS	This field contains the RA status.	CHAR	1	0	N
CHECK_SAK	The unique system assigned key that identifies a payment that originates from the MMIS.	NUMBER	9	0	N
SAK_FIN_SCHED	The system assigned key that identifies a unique financial schedule within the interChange financial subsystem.	NUMBER	9	0	N

2.13.106 T_FIN_REMT_TXN_XREF

This table stores the transactions that were used to generate a remittance advice out of the MMIS. It will contain all txn types including denied claims. Note: Not all remittance records will have a check_sak.

Column Name	Description	Type	Length	Precision	Primary Key
SAK_REMIT	The unique id that identifies an RA.	NUMBER	9	0	Y
CDE_TXN	The code of the financial transaction	CHARACTER	1	0	Y
SAK_TXN	This field contains the sak of the transactions that are related to the RA.	NUMBER	9	0	Y

2.13.107 T_FIN_REPORT

This table contains the report entities for reports that require periodic parm processing.

Column Name	Description	Type	Length	Precision	Primary Key
RT_NAME	Fully qualified report code. (that is: FIN-1099-X)	CHAR	18	0	Y
SAK_FIN_CYCLE	The system assigned key that identifies a unique financial cycle within interChange.	NUMBER	9	0	N

Column Name	Description	Type	Length	Precision	Primary Key
CDE_RT_TYPE	This is the generic transaction type to be reported. A report is associated with a particular transaction type. R = Account Receivables M = Capitation P = Payment H = Cash Receipts E = Expenditures V = Voids U = Reissues C = Claims G = Generic (this applies to reports that need to always run within a given cycle)	CHAR	1	0	N
CDE_REPOT_FREQ	This is the report frequency code. D = Daily W = Weekly M = Monthly Q = Quarterly A = Annual	CHAR	1	0	N

2.13.108 T_FIN_RT_PARMS

This table contains the date parms for financial reports. It is updated whenever the associated reports are scheduled to run in a financial cycle.

Column Name	Description	Type	Length	Precision	Primary Key
SAK_FIN_CYCLE	The system assigned key that identifies a unique financial cycle within interChange.	NUMBER	9	0	Y
CDE_RT_TYPE	This is the generic transaction type to be reported. A report is associated with a particular transaction type. R = Account Receivables M = Capitation P = Payment H = Cash Receipts E = Expenditures V = Voids U = Reissues C = Claims G = Generic (this applies to reports that need to always run within a given cycle)	CHAR	1	0	Y
CDE_REPOT_FREQ	This is the report frequency code. D = Daily W = Weekly M = Monthly Q = Quarterly A = Annual	CHAR	1	0	Y
DTE_PARM_1	This is the begin date for the report date range. All transactions up to this date will be reported.	NUMBER	8	0	N

Column Name	Description	Type	Length	Precision	Primary Key
DTE_PARM_2	This is the end date for the report date range. All transactions up to this date will be reported.	NUMBER	8	0	N

2.13.109 T_FIN_SCHEDULE

This table stores information related to a financial schedule. Each financial cycle can be assigned multiple schedules.

Column Name	Description	Type	Length	Precision	Primary Key
SAK_FIN_SCHED	The system assigned key that identifies a unique financial schedule within the interChange financial subsystem.	NUMBER	9	0	Y
SAK_FIN_CYCLE	The system assigned key that identifies a unique financial cycle within interChange.	NUMBER	9	0	N
NUM_HIERARCHY	A numeric value assigned to indicate the order we will check a transaction for scheduling. Once a transaction meets all criteria on a single financial schedule, it will use that assigned scheduled period.**T**herefore, the order in which we check the different schedules for the same transaction type is important.	CHAR	4	0	N
CDE_FREQ	FF=First, SS=Second, TT=Third, LL=Last, SL=Second to Last A value of 'D' or 'W' in cde_occur would result in any value in this field being ignored.	CHAR	2	0	N
CDE_DAY	M = Monday, T = Tuesday, W = Wednesday, H = Thursday, F= Friday. A value of 'D' in cde_occur would result in any value in this field being ignored.	CHAR	1	0	N
CDE_OCCUR	D=Daily, W= Weekly, M=Monthly,	CHAR	1	0	N
SCHED_TITLE	Short name describing the schedule	CHAR	30	0	N

Column Name	Description	Type	Length	Precision	Primary Key
SCHED_DESC	Long description for the schedule	VARCHAR	80	0	N
CDE_REPOT_TYPE	Type of reports associated with this schedule. Weekly ('W'), Daily ('D'), Monthly ('M')	CHAR	1	0	N
IND_AR_RECOUP	This field indicates if a schedule is to be included in the AR recoupment process.	CHAR	1	0	N
IND_PROCESS_HOLD	This field indicates if a schedule is to be included in the payment hold and prudent pay process	CHAR	1	0	N
IND_PROCESS_LIENS	This field indicates if a schedule is to be included in the lien process.	CHAR	1	0	N
IND_PROCESS_SANCTIONS	This field indicates if a schedule is to be included in the sanction process.	CHAR	1	0	N
IND_PROCESS_WITHHOLDS	This field indicates if a schedule is to be included in the withholding process.	CHAR	1	0	N
CDE_SCHED_TYPE	This field indicates the type of financial schedule.	CHAR	1	0	N

2.13.110 T_FIN_SCHED_CRT_PAYEE

This is the table that contains the payee type criteria for the financial schedule.

Column Name	Description	Type	Length	Precision	Primary Key
SAK_FIN_SCHED	The system assigned key that identifies a unique financial schedule within the interChange financial subsystem.	NUMBER	9	0	Y
CDE_PAYEE_TYPE	Unique char value for payee types defined within financial.	CHAR	1	0	Y

2.13.111 T_FIN_SCHED_CRT_PAYER

This is the table that contains the payer saks for the payers that are to processed in the financial schedule.

Column Name	Description	Type	Length	Precision	Primary Key
SAK_FIN_SCHED	The system assigned key that identifies a unique financial schedule within the interChange financial subsystem.	NUMBER	9	0	Y
SAK_FUND_PAYER	The system assigned key that identifies a unique payer within interChange.	NUMBER	9	0	Y

2.13.112 T_FIN_SCHED_CRT_STATUS

This table stores the status criteria for claims and expenditure transactions. Valid claims status' are: D-Denied, S-Suspended, P-Paid, A- All Valid expenditure status' are: D-Immediate, M-Manual, R-Regular

Column Name	Description	Type	Length	Precision	Primary Key
SAK_CRT_TXN	The system assigned key that identifies a unique financial schedule criteria TXN within the interChange financial subsystem.	NUMBER	9	0	Y
CDE_STATUS	This field is status of the transaction criteria. For claims it would be an applicable claim status. For Expenditures it can be Manual, Immediate, Regular.	CHAR	1	0	Y

2.13.113 T_FIN_SCHED_CRT_TXN

This is the criteria table that contains the transaction codes for the types of transactions that are to be processed in the financial schedule.

Column Name	Description	Type	Length	Precision	Primary Key
SAK_CRT_TXN	The system assigned key that identifies a unique financial schedule criteria TXN within the interChange financial subsystem.	NUMBER	9	0	Y
SAK_FIN_SCHED	The system assigned key that identifies a unique financial schedule within the interChange financial subsystem.	NUMBER	9	0	N

Column Name	Description	Type	Length	Precision	Primary Key
CDE_TXN	The code of the financial transaction	CHARACTER	1	0	N
CDE_TXN_TYPE	This field describes the type of transaction record. C for claim, F for financial.	CHAR	1	0	N

2.13.114 T_FIN_SCHED_HOLD

This entity contains the holds for a particular schedule. A financial schedule can be placed on hold for a given period of time.

Column Name	Description	Type	Length	Precision	Primary Key
SAK_FIN_SCHED	The system assigned key that identifies a unique financial schedule within the interChange financial subsystem.	NUMBER	9	0	Y
SEQ_NUM		NUMBER	4	0	Y
DESC_REASON	The reason the schedule was placed on hold.	VARCHAR	80	0	N
DTE_EFFECTIVE	This is the date that the schedule will begin to be put on hold.	NUMBER	8	0	N
DTE_END	This is the date that the schedule will no longer be on hold.	NUMBER	8	0	N

2.13.115 T_FIN_SCHED_OVERRIDE

This table stores information related to a financial schedule override. Each schedule can be overridden temporarily.

Column Name	Description	Type	Length	Precision	Primary Key
SAK_SCHED_OVERRIDE	The system assigned key that identifies a schedule override within the interChange financial subsystem.	NUMBER	9	0	Y
SAK_FIN_SCHED	The system assigned key that identifies a unique financial schedule within the interChange financial subsystem.	NUMBER	9	0	Y

Column Name	Description	Type	Length	Precision	Primary Key
CDE_FREQ	FF=First, SS=Second, TT=Third, LL=Last, SL=Second to Last A value of 'D' or 'W' in cde_occur would result in any value in this field being ignored.	CHAR	2	0	N
CDE_DAY	M = Monday, T = Tuesday, W = Wednesday, H = Thursday, F= Friday. A value of 'D' in cde_occur would result in any value in this field being ignored.	CHAR	1	0	N
CDE_OCCUR	D=Daily, W= Weekly, M=Monthly,	CHAR	1	0	N
DESC_REASON	Reason for the override.	VARCHAR	80	0	N
DTE_EFFECTIVE	The date the override is effective.	NUMBER	8	0	N
DTE_END	The date the override ends.	NUMBER	8	0	N

2.13.116 T_FIN_TXN_TYPE

This is the cde table that contains all transaction types that are processed within the financial subsystem.

Column Name	Description	Type	Length	Precision	Primary Key
CDE_TXN	The code of the financial transaction	CHARACTER	1	0	Y
CDE_TXN_SORT	The sort key value for the transaction.	CHAR	2	0	N
DSC_TXN_TYPE	Description of the financial transaction.	CHAR	18	0	N
IND_SCHEDULE	Indicator that shows whether or not the transaction should be scheduled for processing from the scheduling user interface.	CHAR	1	0	N

Column Name	Description	Type	Length	Precision	Primary Key
CDE_TXN_SECONDARY	Secondary code used for the txn, these are old codes used for the transaction in various parts of the system.	CHAR	2	0	N

2.13.117 T_FUND_CDE_GRP

This table contains the fund code groups that are used in the system.

Column Name	Description	Type	Length	Precision	Primary Key
SAK_FUND_GROUP	This is the system assigned key of the a group of fund codes.	NUMBER	9	0	Y
DSC_FUND_GROUP	This is the description of the a fund code group.	CHAR	50	0	N

2.13.118 T_FUND_CDE_GRP_XRF

This table contains the fund code within a specific group for processing specific groups of fund codes.

Column Name	Description	Type	Length	Precision	Primary Key
SAK_FUND_GROUP	This is the system assigned key of the a group of fund codes.	NUMBER	9	0	Y
SAK_FUND_CODE	This is the unique system assigned key to the Financial Fund Codes.	NUMBER	9	0	Y

2.13.119 T_FUND_PAYER

The fund payer will generally represent a unique organization or entity responsible for the payment of transactions such as claims based on the fund code assigned to that transaction. While similar to a financial cycle entity, the fund payer entity enables the system to allow further categorization and classification of associated transactions for the purposes of processing and reporting. Fund payer entities are associated with Financial cycle entities through the relational database. Each fund payer can belong to only one Financial cycle.

Column Name	Description	Type	Length	Precision	Primary Key
SAK_FUND_PAYER	The system assigned key that identifies a unique payer within interChange.	NUMBER	9	0	Y
SAK_FIN_CYCLE	The system assigned key that identifies a unique financial cycle within interChange.	NUMBER	9	0	N

Column Name	Description	Type	Length	Precision	Primary Key
NUM_HIER_ID_PAYER	This is another system assigned identifier that is used to identify a hierarchy thread that contains this Fund Payer.**T**his field is currently not in use.	NUMBER	9	0	N
CDE_FUND_PAYER	An optional business code value used to identify the payer.**T**his code may be used for reporting or identifying payers on feeds to external systems.	CHAR	4	0	N
DSC_FUND_PAYER_SHORT	A short business description of the payer that will be used for reporting and windows.	VARCHAR2	30	0	N
DSC_FUND_PAYER	A business description of the payer that will be used for reporting and windows.	VARCHAR2	1000	0	N
IND_RECOUP_OTH_PAY	Indicates whether this payer is allowed to recoup funds from other payers claims payments or only recoup funds from the same payers claim payments.	CHAR	1	0	N
IND_OTH_PAY_RECOUP	Indicates whether this payer allows other payers to recoup funds from this payers claim payments or if this payer does not allow this.	CHAR	1	0	N
IND_BUDGET	Indicates if this payer limits the amount of claims paid based on a budget.	CHAR	1	0	N
DTE_EFFECTIVE	The date that the fund payer record becomes active.	NUMBER	8	0	N
DTE_END	The date that the fund payer record becomes inactive.	NUMBER	8	0	N
DTE_INACTIVE	The date that the fund payer record was deactivated.	DATE	0	0	N

2.13.120 T_LIEN

This maintains the association of payments made to a lien holder on behalf of a provider.

Column Name	Description	Type	Length	Precision	Primary Key
SAK_LIEN	System assigned key that uniquely identifies a lien that can process in the system.	NUMBER	9	0	Y
SAK_LIEN_HOLDER	System assigned key that uniquely identifies the name and address of a non-provider entity on the MMIS system. For example, the addresses of Lien Holders and Counties and non-provider entities to which we make Expenditure Payments.	NUMBER	9	0	N
CDE_PAYEE_TYPE	Unique char value for payee types defined within financial.	CHAR	1	0	N
SAK_PAYEE	System assigned key that uniquely identifies the payee for whom the lien is set up against.	NUMBER	9	0	N
NUM_REFERENCE	A unique number assigned by the State recorded on the original documentation received that initiates a lien.	CHAR	20	0	N
CDE_REASON_LIEN	Code used to uniquely identify the reason for the original lien against a provider on the MMIS system.	CHAR	4	0	N
CDE_STATUS1	Code that uniquely identifies the status of the lien against a provider on the MMIS system.	CHAR	1	0	N
AT_ORIGINAL_LIEN	Original amount assessed by the lien holder against the provider.	NUMBER	10	2	N
AT_LIEN_RATE	Amount of the flat payment per claim cycle taken from a provider to pay the lien holder.	NUMBER	10	2	N
PCT	Percentage amount to be taken from the provider in each claim cycle to pay the lien holder.	NUMBER	6	4	N
DTE_ADDED	Date that the lien was added to the system.	NUMBER	8	0	N

Column Name	Description	Type	Length	Precision	Primary Key
DTE_EFFECTIVE_FROM	Date that determines the from effective date for garnishing a provider's payment.	NUMBER	8	0	N
DTE_EFFECTIVE_THRU	Date that determines the end effective date for garnishing a provider's payment.	NUMBER	8	0	N
SAK_FIN_CYCLE	The system assigned key that identifies a unique financial cycle within interChange.	NUMBER	9	0	N
CDE_FREQ_RECOUP	The is the frequency by which the deduction recoupment occurs.	CHAR	1	0	N

2.13.121 T_LIEN_COMMENT

Column Name	Description	Type	Length	Precision	Primary Key
SAK_LIEN	System assigned key that uniquely identifies a lien that can process in the system.	NUMBER	9	0	Y
NUM_SEQ	Represents the sequence number of the comment.	NUMBER	4	0	Y
DSC_LIEN_COMMENT	Free form text used to add information to a deduction transaction.	VARCHAR	250	0	N
DTE_ADDED	This is the date the lien comment was added.	NUMBER	8	0	N
ID_USER	The clerk number of the user who entered the comment.	CHAR	8	0	N

2.13.122 T_LIEN_DISP

This table contains a list of financial transactions that are applied to a lien that positively or negatively adjust the balance of the lien.

Column Name	Description	Type	Length	Precision	Primary Key
SAK_DISPOSITION	System assigned key that uniquely identifies a disposition entry associated to a lien on the MMIS system.	NUMBER	9	0	Y

Column Name	Description	Type	Length	Precision	Primary Key
SAK_LIEN	System assigned key that uniquely identifies a lien against a provider on the MMIS system.	NUMBER	9	0	N
NUM_REFERENCE	Document number assigned by a clerk that identifies any documentation received regarding a manually entered disposition. For a claim cycle entry, the claim number is stored in this field to relate the disposition to the claim.	CHAR	20	0	N
CDE_DISP_REASON	Code used to identify the reason for the disposition against the lien.	CHAR	4	0	N
AT_DISPOSITION	Amount of the disposition against the original lien.	NUMBER	10	2	N
DTE_ADDED	Date that the disposition was added to the system.	NUMBER	8	0	N
DTE_PAYMET_ISSUE	This is the financial payment issue date if the disposition was created during a financial cycle. It is the date of the disposition if the disposition was created by the online (manual disposition).	NUMBER	8	0	N
SAK_FIN_SCHED	The system assigned key that identifies a unique financial schedule within the interChange financial subsystem.	NUMBER	9	0	N

2.13.123 T_LIEN_RSN_CODE

This contains all of the valid reason codes for a lien in the MMIS system.

Column Name	Description	Type	Length	Precision	Primary Key
CDE_REASON_LIEN	Code used to uniquely identify the reason for the original lien against a provider on the MMIS system.	CHAR	4	0	Y
DSC_LIEN_CODE	Description of the reason code.	CHAR	20	0	N

Column Name	Description	Type	Length	Precision	Primary Key
IND_IRS_B	This indicated if the reason code is used for IRS Backup Withholding.**T**he Backup Withholding will be reported on the 1099's.	CHAR	1	0	N
CDE_REASON_TYPE	Indicator used to determine the type of deduction. Possible values: 'L' - Lien, 'W' - Withhold, 'S' - Sanction, (Note backup withholding is considered a lien since payment needs to be made to a third party)	CHAR	1	0	N

2.13.124 T_LIEN_STATUS

This contains all of the valid status's for a lien in the MMIS system.

Column Name	Description	Type	Length	Precision	Primary Key
CDE_STATUS1	Code that uniquely identifies the status of the lien against a provider on the MMIS system.	CHAR	1	0	Y
DSC_STATUS	Description of the lien status code.	CHAR	20	0	N

2.13.125 T_NONPROV_TAX_ID

This table indicates the tax identification number to be used for reporting purposes for non-provider related expenditures.**T**his may be either a Social Security Number or Federal Employer Identification Number.**T**his table also contains the effective dates for a given tax ID.

Column Name	Description	Type	Length	Precision	Primary Key
SAK_PAYEE	System assigned key that uniquely identifies the name and address of a non-provider entity on the MMIS system. For example, the addresses of Lien Holders and Counties and non-provider entities to which we make Expenditure Payments.	NUMBER	9	0	Y
CDE_PAYEE_TYPE	Unique char value for payee types defined within financial.	CHAR	1	0	Y
DTE_EFFECTIVE	Effective date for an object. Used to signify the start of a span or period.	NUMBER	8	0	N

Column Name	Description	Type	Length	Precision	Primary Key
DTE_END	The date that something is no longer in effect.	NUMBER	8	0	N
NUM_TAX_ID	This is the tax identification number assigned to a provider by the Internal Revenue Service.	CHAR	9	0	N
IND_TAX_ID_TYPE	This field indicates whether the tax ID is a social security number or an FEIN.	CHAR	1	0	N
IND_TAX_ID_EXEMPT	This field indicates whether the corresponding tax id field contains an EXEMPT number or not.**T**he valid values are Y = Tax Exempt and N = Not Tax Exempt.	CHAR	1	0	N

2.13.126 T_PAYMET_EXTRACT

The table accumulates weekly claim payments to the provider.**T**he table is used for CLM-0175-W, a weekly report.**T**he table shall store claims payment data for about 18 months.**T**he data added into the table on a weekly basis comes from check_claim_xref and check tables after the financial cycle.**T**he report is run using this table, every week and reports on fiscal year to date and calendar year to date claim payment amounts.

Column Name	Description	Type	Length	Precision	Primary Key
DTE_ISSUE	The date of issue for a provider check.	NUMBER	8	0	Y
CDE_CLM_TYPE	Value used to describe the type of Medicaid claim being processed.	CHAR	1	0	Y
AT_TOTAL	The amount of money (check or EFT) that will be paid to an external entity.	NUMBER	11	2	N

2.13.127 T_PAYMET_HOLD

The Payment Hold table is used in financial processing to specify criteria for holding payment on payable transactions.

Column Name	Description	Type	Length	Precision	Primary Key
SAK_PAYMET_HOLD	The unique system assigned key for the Payment Hold entity.	NUMBER	9	0	Y

Column Name	Description	Type	Length	Precision	Primary Key
NUM_CONTROL	User assigned control number made up of Julian date and three digit sequence number to make unique.	NUMBER	9	0	N
CDE_REASON_FOUR	A four digit code, user defined, that represents the reason for the payment hold and who initiated the request for the hold.	CHAR	4	0	N
DTE_EFFECTIVE	The date the payment hold criteria will take effect on claims marked as payable that are sent to financial.	NUMBER	8	0	N
DTE_EFFECTIVE_THRU	The last date the payment hold criteria will be applied to claims in financial, also referred to as the release date.	NUMBER	8	0	N
DTE_RECEIVED_FROM	The date the claim is ICNed is compared to this date when selecting claims for payment hold.	NUMBER	8	0	N
DTE_RECEIVED_THRU	The date the claim was ICNed is compared against this date when selecting claims for payment hold.	NUMBER	8	0	N
DTE_SERVICE	The beginning date of services that will be compared against the claims dates of service to determine if the claim is eligible for claim payment hold.	NUMBER	8	0	N
DTE_SERVICE_TO	The ending date of service that is compared against the claims dates of service to determine if the claim is eligible for payment hold.	NUMBER	8	0	N

Column Name	Description	Type	Length	Precision	Primary Key
IND_IN_EX_CLAIM	Claim type include or exclude indicator. When set to include all claims matching claim types will be eligible for payment hold. When exclude is set then claims matching claim type will not be eligible for payment hold.	CHAR	1	0	N
IND_IN_EX_PAYEE	The include or exclude indicator for payee. When include is set claims with matching payee ids will be eligible for payment hold. When set to exclude claims matching payees will not be eligible for payment hold.	CHAR	1	0	N
IND_IN_EX_PR_TYPE	The include or exclude indicator for provider types. When set to include all claims with matching provider types will be eligible for payment hold. When set to exclude all claims matching provider type will not be eligible for payment hold.	CHAR	1	0	N
IND_IN_EX_PROGRAM	The include or exclude indicator for the program code. When set to include the claims with matching program codes will be eligible for payment hold. When set to exclude all claims with matching program codes will not be eligible for payment hold.	CHAR	1	0	N

Column Name	Description	Type	Length	Precision	Primary Key
IND_IN_EX_FUND	Fund code include or exclude indicator. When set to include all claims matching the fund code will be eligible for payment hold. When exclude is set then claims matching fund code will not be eligible for payment hold.	CHAR	1	0	N
IND_IN_EX_CLM_MED	Claim media include or exclude indicator. When set to include all claims matching the claim media will be eligible for payment hold. When exclude is set then claims matching claim media will not be eligible for payment hold.	CHAR	1	0	N
IND_IN_EX_PAY_TYPE	Payment type include or exclude indicator. When set to include all claims matching the payment type will be eligible for payment hold. When exclude is set then claims matching payment type will not be eligible for payment hold.	CHAR	1	0	N
AT_PAY_OUT	This is the amount of money that can be paid out before the hold begins.	NUMBER	10	2	N
IND_IN_EX_PAYER	Payer include or exclude indicator. When set to include all transactions for the payer will be eligible for payment hold. When exclude is set then transactions matching payer will not be eligible for payment hold.	CHAR	1	0	N

Column Name	Description	Type	Length	Precision	Primary Key
IND_IN_EX_SCOS	The include or exclude indicator for state category of service (SCOS). When set to include all claims with matching SCOS will be eligible for this payment hold. When set to exclude all claims matching SCOS will not be eligible for this payment hold.	CHAR	1	0	N
IND_IN_EX_PROV_SPEC	The include or exclude indicator for provider specialty. When set to include all claims with matching provider specialty will be eligible for this payment hold. When set to exclude all claims matching provider specialty will not be eligible for this payment hold.	CHAR	1	0	N
NUM_DAYS	The number of days for (prudent) payment.**T**his is the number of calendar days before a payment is allowed for a claim. It is calculated from the submit date (date of receipt).	NUMBER	4	0	N
SAK_FIN_CYCLE	The system assigned key that identifies a unique financial cycle within interChange.	NUMBER	9	0	N

2.13.128 T_PAY_HOLD_CLM_MED

This is a table that will contain payment hold information by claim media type.

Column Name	Description	Type	Length	Precision	Primary Key
SAK_PAYMET_HOLD	The unique system assigned key for the Payment Hold entity.	NUMBER	9	0	Y
NUM_REGION	This is the code of the claim media type.	CHAR	2	0	Y

2.13.129 T_PAY_HOLD_CLM_TYP

This table contains the claim types selected for a payment hold.

Column Name	Description	Type	Length	Precision	Primary Key
SAK_PAYMET_HOLD	The unique system assigned key for the Payment Hold entity.	NUMBER	9	0	Y
CDE_CLM_TYPE	Claim type selected for payment hold.	CHAR	1	0	Y
CNT	The count of the number of times the payment hold claim types have been updated for a specific claim payment hold.**T**his count is used in internal audit processing.	NUMBER	4	0	N

2.13.130 T_PAY_HOLD_FUND

This table contains the fund code involved in a payment hold.

Column Name	Description	Type	Length	Precision	Primary Key
SAK_PAYMET_HOLD	The unique system assigned key for the Payment Hold entity.	NUMBER	9	0	Y
SAK_FUND_CODE	This is the unique system assigned key to the Financial Fund Codes.	NUMBER	9	0	Y

2.13.131 T_PAY_HOLD_PROV

This table contains the payee saks that are identified for inclusion or exclusion from a payment hold.

Column Name	Description	Type	Length	Precision	Primary Key
SAK_PAYMET_HOLD	The unique system assigned key for the Payment Hold entity.	NUMBER	9	0	Y
CDE_PAYEE_TYPE	Unique char value for payee types defined within financial.	CHAR	1	0	Y
SAK_PAYEE	System assigned key that uniquely identifies a payee.	NUMBER	9	0	Y
CNT	This count is the number of times the payment hold providers are updated. This is used for internal audit processing.	NUMBER	4	0	N

2.13.132 T_PAY_HOLD_PAYEE

This table contains the payee saks that are identified for inclusion or exclusion from a payment hold.

Column Name	Description	Type	Length	Precision	Primary Key
SAK_PAYMET_HOLD	The unique system assigned key for the Payment Hold entity.	NUMBER	9	0	Y
CDE_PAYEE_TYPE	Unique char value for payee types defined within financial.	CHAR	1	0	Y
SAK_PAYEE	System assigned key that uniquely identifies a payee.	NUMBER	9	0	Y
CNT	This count is the number of times the payment hold providers are updated.This is used for internal audit processing.	NUMBER	4	0	N

2.13.133 T_PAY_HOLD_PAYER

This table contains the payers selected for a payment hold.

Column Name	Description	Type	Length	Precision	Primary Key
SAK_PAYMET_HOLD	The unique system assigned key for the Payment Hold entity.	NUMBER	9	0	Y
SAK_FUND_PAYER	The system assigned key that identifies a unique payer within interChange.	NUMBER	9	0	Y

2.13.134 T_PAY_HOLD_PAY_TYP

This table contains the payment hold information by the payment type.

Column Name	Description	Type	Length	Precision	Primary Key
SAK_PAYMET_HOLD	The unique system assigned key for the Payment Hold entity.	NUMBER	9	0	Y
CDE_PAY_TYPE	This is the code of the payment type (ie. EFT, check, transfer) .	CHAR	1	0	Y

2.13.135 T_PAY_HOLD_PGM_CDE

This table contains the program codes selected for a payment hold.

Column Name	Description	Type	Length	Precision	Primary Key
SAK_PAYMET_HOLD	The unique system assigned key for the Payment Hold entity.	NUMBER	9	0	Y
SAK_PUB_HLTH	System assigned key to the program code entity.	NUMBER	9	0	Y

Column Name	Description	Type	Length	Precision	Primary Key
CNT	The count of the number of times the payment hold programs have been updated.This is used in internal audit processing.	NUMBER	4	0	N

2.13.136 T_PAY_HOLD_PROV_SPEC

This entity contains all the provider specialties that may be included in the hold or excluded from the hold.

Column Name	Description	Type	Length	Precision	Primary Key
SAK_PAYMET_HOLD	The unique system assigned key for the Payment Hold entity.	NUMBER	9	0	Y
CDE_PROV_SPEC	The provider specialty selected for payment hold.	CHAR	3	0	Y
CT_PROV_SPEC	The count of the number of times the payment hold programs have been updated.This is used in internal audit processing.	NUMBER	4	0	N

2.13.137 T_PAY_HOLD_PR_TYPE

This table contains the provider types selected for a payment hold.

Column Name	Description	Type	Length	Precision	Primary Key
SAK_PAYMET_HOLD	The unique system assigned key for the Payment Hold entity.	NUMBER	9	0	Y
CDE_PROV_TYPE	The provider type selected for payment hold.	CHAR	2	0	Y
CNT	This count is the number of times the payment hold provider types have been updated.This count is used in internal audit processing.	NUMBER	4	0	N

2.13.138 T_PAY_HOLD_REASONS

This table contains the payment hold reason codes for the MMIS system.

Column Name	Description	Type	Length	Precision	Primary Key
CDE_REASON_FOUR	Four digit code used as the payment hold reason code.	CHAR	4	0	Y

Column Name	Description	Type	Length	Precision	Primary Key
DSC_REASON	Description of the reason for withholding payment.	CHAR	30	0	N
CDE_REASON_TYPE	Code used to identity the payment hold type. H = Payment Hold, P = Prudent Pay.	CHAR	1	0	N

2.13.139 T_PAY_HOLD_SCOS

This entity contains all the State Categories of Service values that may be included in the hold or excluded from the hold.

Column Name	Description	Type	Length	Precision	Primary Key
SAK_PAYMET_HOLD	The unique system assigned key for the Payment Hold entity.	NUMBER	9	0	Y
SAK_SHOT_COS	System assigned key to the state category of service.	NUMBER	4	0	Y
CT_SCOS	The count of the number of times the payment hold programs have been updated.**T**his is used in internal audit processing.	NUMBER	4	0	N

2.13.140 T_PT_NUM_RNG

This entity will hold the valid beginning and ending numbers for the different payment numbers.**T**his could be a range of check numbers to be assigned, check numbers printed, check numbers to be voided or EFT numbers.**T**his entity also includes the last number assigned from this range. If the last number assigned is equal to the ending number, then this range has been fully utilized.

Column Name	Description	Type	Length	Precision	Primary Key
SAK_PAY_NUM_RANGE	The system assigned key that uniquely identifies the payment number range in the system.	NUMBER	9	0	Y
CDE_RANGE_TYPE	The type of range to assigned. Examples include check ('C')or EFT ('E').	CHAR	1	0	N
NUM_RANGE_BEGIN	The first number to be assigned in the range.	NUMBER	9	0	N
NUM_RANGE_END	The last number that can be assigned in the range.	NUMBER	9	0	N

Column Name	Description	Type	Length	Precision	Primary Key
NUM_RANGE_CURR	The last number that has been assigned in the range.	NUMBER	9	0	N

2.13.141 T_PT_RNG_TYPE

This is the code table that holds the types of ranges that will be used in the system.

Column Name	Description	Type	Length	Precision	Primary Key
CDE_RANGE_TYPE	The type of range to be assigned. Examples include check ('C')or EFT ('E').	CHAR	1	0	Y
DSC_RANGE_TYPE	A description of the range type to be assigned.	CHAR	30	0	N

2.13.142 T_RTS_COMMENT

Free-form text area that allows a clerk to add documentation to the return to sender form.

Column Name	Description	Type	Length	Precision	Primary Key
SAK	System assigned key that identifies either a cash receipt number (CCN) or claim adjustment (ICN).	NUMBER	9	0	N
CDE	Indicates whether the system assigned key is cash receipts (check related 'C') or an adjustment request (non-check related 'A' or 'P'). 'A' indicates that provider mailing address will be used, 'P' indicates that address keyed on RTS will be used.	CHAR	1	0	N
NUM_SEQ	Represents the line number of the free-form text.**T**he maximum number is 8 which represents a total of 2000 characters of free form text for comments.	NUMBER	4	0	N
DSC_LONG	Text used for additional documentation to be added to the return to sender letter.	CHAR	250	0	N

2.13.143 T_RTS_INFO

Contains information about cash receipts or claim adjustment requests that need to be returned to the sender.

Column Name	Description	Type	Length	Precision	Primary Key

Column Name	Description	Type	Length	Precision	Primary Key
SAK	System assigned key that identifies either a cash receipt number (CCN) or claim adjustment (ICN).	NUMBER	9	0	Y
CDE	Indicates whether the system assigned key is cash receipts (check related 'C') or an adjustment request (non-check related 'A' or 'P'). 'A' indicates that provider mailing address will be used, 'P' indicates that address keyed on RTS will be used.	CHAR	1	0	Y
CDE_REASON_FOUR	Indicates the reason the request (check or non-check related) is being returned to the sender.**T**his code will help determine which letter format to produce.	CHAR	4	0	N
SAK_ADDRESS	System assigned key that uniquely identifies the address of the sender a return letter should be generated for. For cash receipts this is an optional field; provider number is stored on cash receipt. For adjustments, this is required.	NUMBER	9	0	N
IND	Field to indicate whether a letter has been written for the return to sender cash receipt.	CHAR	1	0	N
SAK_PROV	System assigned key that uniquely identifies the provider enrollment tracking.	NUMBER	9	0	N
CDE_SERVICE_LOC	Suffix added to the provider number to identify the various locations that a provider does business.	CHAR	1	0	N

2.13.144 T_RTS_REASON

A code indicating why we are returning an adjustment, check or other correspondence to the sender.

Column Name	Description	Type	Length	Precision	Primary Key

Column Name	Description	Type	Length	Precision	Primary Key
CDE_REASON_FOUR	A code which represents the reason why correspondence received by the account is being returned to the sender.	CHAR	4	0	Y
DSC_25	Description of the return to sender reason code.	CHAR	25	0	N
IND	Indicates if the reason code chosen requires comments to be keyed.	CHAR	1	0	N
NAM_DOC_LETTER	The name of the letter document this reason code will produce during letter generation.	CHAR	12	0	N

maxMC Detailed System Design

Kentucky Utilization Management Project

Cabinet for Health and Family Services
Department for Medicaid Services

March 7, 2008

Cabinet for Health and Family Services Department for Medicaid Services	
Role:	Name:
Author	Pam Smith
Reviewer	Cheryl Hanna
EDS Management	Glenn Jennings, Account Manager
Client	Commissioner Elizabeth A. Johnson Deputy Commissioner Carrie Banahan Executive Director/CIO Lorna S. Jones Chief Technical Officer Sandeep Kapoor
DELIVERABLE TITLE: maxMC Detailed System Design	DATE SUBMITTED: January 31, 2008
LOCATION and FILE NAME: KY_maxMC_DSD_Phase_1 v5_(03-07-2008).doc	AUTHORING TOOL: Microsoft Word 2003

Document Change Log

Version	Changed Date	Changed By	Reason
1.0	11/13/2006	Emily Horning	Created document
1.2	01/20/2007	Emily Horning	Updated document
1.3	08/27/2007	Pam Smith	Updated document
1.4	09/17/2007	Pam Smith	Updated document
1.5	11/7/2007	Pam Smith	Updated document

Table of Contents

1 Introduction 1

2 Technical Overview 2
2.1 Technical Components 2
2.1.1 Application Architecture 2
2.1.2 Operational environment 2
2.1.3 Technology infrastructure, software and services 2
2.1.4 Service Delivery 2
2.1.5 Fax, Data, Letter 2
2.2 Software Components 3
2.2.1 Oracle Database Server 3
2.2.2 Onbase 3
2.2.3 Exstream Letter Generation 3
2.3 maxMC Components 3
2.3.1 maxMC Database 3
2.3.2 maxMC Rules Server (also known as JCS) 4
2.3.3 maxMC Data Import (also known as XAct) 4
2.4 Data Capture 5
2.5 Case Management 6
2.6 Letter Generation 7
2.7 Infrastructure Diagram 8
2.8 Solution Overview 9

3 Configuration 10
3.1 Ancillary Staff Information 10
3.1.1 Contact Information 10
3.2 Ancillary Staff Supporting Tables 11
3.2.1 Departments 11
3.2.2 Staff Categories 12
3.2.3 Job Classification 12
3.2.4 Job Title 12
3.2.5 Emergency Code Locator 13
3.3 Appeals 13
3.3.1 Appeal Relationships 13
3.3.2 Appeal Types 14
3.3.3 Appeal Reasons 14
3.3.4 Appeal Decisions 15
3.3.5 Appeal Categories 15
3.3.6 Reasons Appeal Review not Performed 16
3.3.7 Appeal Override Reasons 16
3.3.8 Appeal Extension Reasons 16
3.3.9 Contact Reasons-Appeals 17
3.4 Assessment Supporting Tables 18
3.4.1 Assessment Types 18
3.4.2 Reasons for Override 20
3.5 Care Coordination 21
3.5.1 Authorization Profiles 21
3.5.2 Event Classifications 22
3.5.3 Case Types 22
3.5.4 Authorization Status 22
3.5.5 Determination Reasons 24
3.5.6 Outcome Indicators for Inpatient Reviews 27
3.5.7 Levels of Care 29

3.5.8 Discharge Dispositions 29
3.5.9 Review Reasons 30
3.5.10 Outcome Reasons 31
3.5.11 Treatment Procedure Groups 31
3.5.12 Service Types 37
3.6 Case Management 38
3.6.1 Health Management Programs 38
3.6.2 New Case Responses 38
3.6.3 Issues 39
3.6.4 Contact Reasons-Case Management 39
3.6.5 Outcomes – IMPACT Plus 39
3.7 Clients Supporting Tables 39
3.7.1 Client Types 39
3.8 Contact Management 40
3.8.1 Contact Attitudes 40
3.8.2 Contact Issue Resolutions 40
3.8.3 Contact Reasons (Contacts) 41
3.8.4 Relationships 41
3.8.5 Note (Contact) Types 41
3.9 Managed Care Configuration 42
3.9.1 Managed Care Configuration (1) 42
3.9.2 Managed Care Configuration (2) 43
3.9.3 Managed Care Configuration (3) 43
3.9.4 Managed Care Configuration (4) 45
3.9.5 Managed Care Configuration (5) 49
3.9.6 Managed Care Configuration (6) 50
3.9.7 Managed Care Configuration (7) 51
3.10 Member Information 53
3.10.1 Member Alert Types 53
3.10.2 Member Roles 54
3.10.3 States Provinces 54
3.10.4 Counties 56
3.10.5 Countries 61
3.10.6 Member ID Types 69
3.10.7 Marital Status 70
3.10.8 Next of Kin Roles 70
3.10.9 Plan Provider Type 71
3.10.10 Payer Plan Tiers 71
3.10.11 Disenrollment Reasons 71
3.10.12 Module Buttons 71
3.11 Note Types All Modules 84
3.11.1 Assessment Notes (Criteria Care Coordination) 84
3.11.2 Assessment Notes (Case Management) 84
3.11.3 Assessment (Medical Administrative Review) 85
3.11.4 Assessments OB 86
3.11.5 Case Management Issue 86
3.11.6 Case Management Program 87
3.11.7 Clinical Data 87
3.11.8 Contact 87
3.11.9 OB Information 87
3.11.10 Reasons for Override 88
3.12 Obstetric Information 88
3.12.1 Birth Status 88
3.12.2 Detained Baby Dispositions 88
3.12.3 Detained Baby Reasons 88
3.12.4 Episode Meanings 89

3.12.5 OB Note Types ... 89
3.12.6 OB Outcomes ... 89
3.13 Payer Plans ... 90
3.13.1 Payer Plans ... 90
3.13.2 Plan Types ... 90
3.13.3 Care Classification ... 91
3.14 Place of Service Profiles ... 91
3.14.1 Places of Service ... 91
3.14.2 Standard Configuration - Services ... 93
3.14.3 Service Type ... 94
3.14.4 Place of Service Profiles ... 95
3.15 Letters and Reports ... 98
3.15.1 Delivery Priorities ... 98
3.15.2 Document Types ... 99
3.15.3 Letter Types ... 99
3.15.4 Report Categories ... 100
3.15.5 Window Report Access ... 100
3.16 Site Defined Procedures ... 101
3.16.1 Site Codes ... 101
3.17 System Configuration ... 106
3.17.1 System Configuration Settings ... 106
3.17.2 System Configuration Rules ... 108
3.18 Targeted Medical Management ... 109
3.18.1 Targeted Medical Management ... 109
3.18.2 Requested Providers ... 110
3.19 Task Lists ... 112
3.19.1 Workgroup Users ... 112
3.20 Task Related Tables ... 114
3.20.1 Task Priorities ... 114
3.20.2 Task Lists ... 114
3.21 Task Types ... 115
3.21.1 Task Types ... 115
3.21.2 Parameters ... 116
3.21.3 Label Definition ... 117
3.22 User Information ... 119
3.22.1 User Information ... 119
3.22.2 Account Restrictions ... 120
3.23 Window Privilege Profiles ... 121
3.23.1 Window Access ... 121
3.23.2 Report Access ... 141
3.23.3 Other Access ... 142
3.24 Other Elements ... 143

4 Conversion ... 148
4.1 Introduction ... 148
4.2 Utilizing maxReview ... 148
4.2.1 maxReview and the End-user: Accessing CareReview Data ... 149
4.2.2 Screenshots ... 150
4.2.3 maxReview Integration into maxMC ... 155
4.3 Systematic Conversion Approach from CareReview to maxMC ... 155
4.3.1 Data Migration ... 156
4.3.2 Test Plan ... 156
4.3.3 Data Warehouse ... 157

5 Interfaces/File Transfers ... 158
5.1 Interface Overview ... 158
5.2 Inbound Interfaces from EDS/MMIS ... 160

5.2.1 Member Interface ... 160
5.2.2 Provider Interface ... 160
5.3 Outbound Interfaces from maxMC to EDS/MMIS ... 161
5.3.1 Authorization Interface ... 161
5.4 Outbound Interfaces/File Transfer from EDS/MMIS to External Agencies ... 162
5.4.1 Weekly Basic Child Interface ... 162
5.4.2 Layout ... 163
5.4.3 Production Scheduling ... 163
5.4.4 KAMES Interface ... 163
5.5 maxMC Data Processing Procedures ... 163
5.5.1 Overview ... 163
5.5.2 Running the Internal Process ... 164
5.5.3 Monitoring Interface Processes ... 165
5.5.4 Interface Error Report ... 165
5.6 Interface Tools ... 165
5.6.1 TCL Scripting ... 165
5.6.2 XAct Programs ... 166
5.6.3 Validation Tools and Procedures ... 167
5.6.4 Error Handling Process ... 168
5.6.5 Browser Screens ... 168
5.6.6 Monitoring Interface Processes ... 170
5.7 Application Program Interface Programming – maxReview Interface to maxMC ... 170
5.7.1 Overview ... 170
5.7.2 API Programming Considerations ... 171
5.8 API Programming Interface Programming - InterQual ... 171
5.8.1 Overview ... 171

6 Notes ... 174
6.1 Note Templates ... 174
6.1.1 Overview ... 174
6.1.2 Existing Note Templates ... 174
6.2 New Note Templates ... 175
6.2.1 Transplant Clinical Documentation ... 175
6.2.2 Lung Transplant ... 175
6.2.3 Orthodontics ... 175

7 Reports ... 176
7.1 Cost Variance by Reviewer ... 176
7.1.1 Description ... 176
7.1.2 maxMC Report Code ... 176
7.1.3 Report Variables ... 176
7.1.4 maxMC Report Screen ... 177
7.1.5 Report Samples ... 178
7.2 Denied Days by Member ... 179
7.2.1 Description ... 179
7.2.2 maxMC Report Code ... 179
7.2.3 Report Variables ... 179
7.2.4 maxMC Report Screen ... 179
7.2.5 Report Sample ... 180
7.3 Denied Days by Reviewer ... 181
7.3.1 Description ... 181
7.3.2 maxMC Report Code ... 181
7.3.3 Report Variables ... 181
7.3.4 maxMC Report Screen ... 182
7.3.5 Report Sample ... 183
7.4 Denied Services by Member ... 184
7.4.1 Description ... 184

7.4.2 MaxMC Report Code 184
7.4.3 Report Variables 184
7.4.4 maxMC Report Screen 185
7.4.5 Report Sample 186
7.5 Denied Services by Reviewer 187
7.5.1 Description 187
7.5.2 MaxMC Report Code 187
7.5.3 Report Variables 187
7.5.4 maxMC Report Screen 188
7.5.5 Report Sample 189
7.6 Frequent Flyers 190
7.6.1 Description 190
7.6.2 MaxMC Report Code 190
7.6.3 Report Variables 190
7.6.4 maxMC Report Screen 191
7.6.5 Report Sample 192
7.7 Frequent Flyers - Inpatient 193
7.7.1 Description 193
7.7.2 MaxMC Report Code 193
7.7.3 Report Variables 193
7.7.4 maxMC Report Screen 194
7.7.5 Report Samples 195
7.8 Inpatient Analysis 196
7.8.1 Description 196
7.8.2 MaxMC Report Code 196
7.8.3 Report Variables 196
7.8.4 maxMC Report Screen 197
7.8.5 Report Samples 198
7.9 Inpatient Census (by Facility) 199
7.9.1 Description 199
7.9.2 MaxMC Report Code 199
7.9.3 Report Variables 199
7.9.4 maxMC Report Screen 200
7.9.5 Report Samples 201
7.10 LOS Over Acceptable Length 202
7.10.1 Description 202
7.10.2 MaxMC Report Code 202
7.10.3 Report Variables 202
7.10.4 maxMC Report Screen 203
7.10.5 Report Sample 204
7.11 Authorization Requests by Service Types 205
7.11.1 Description 205
7.11.2 MaxMC Report Code 205
7.11.3 Report Variables 205
7.11.4 maxMC Report Screen 206
7.11.5 Report Samples 207
7.12 Denied Days by Facility 208
7.12.1 Description 208
7.12.2 maxMC Report Code 208
7.12.3 Report Variables 208
7.12.4 maxMC Report Screen 209
7.12.5 Report Sample 210
7.13 Denied Services by Provider Type 211
7.13.1 Description 211
7.13.2 MaxMC Report Code 211
7.13.3 Report Variables 211

7.13.4 maxMC Report Screen 212
7.13.5 Report Sample 213
7.14 Denied Services by Provider 214
7.14.1 Description 214
7.14.2 MaxMC Report Code 214
7.14.3 Report Variables 214
7.14.4 maxMC Report Screen 215
7.14.5 Report Sample 216
7.15 Approved Days by Facility 217
7.15.1 Description 217
7.15.2 maxMC Report Code 217
7.15.3 Report Variables 217
7.15.4 maxMC Report Screen 218
7.15.5 Report Sample 219
7.16 Approved Services by Provider Type 220
7.16.1 Description 220
7.16.2 MaxMC Report Code 220
7.16.3 Report Variables 220
7.16.4 maxMC Report Screen 221
7.16.5 Report Sample 222
7.17 Approved Services by Provider 223
7.17.1 Description 223
7.17.2 MaxMC Report Code 223
7.17.3 Report Variables 223
7.17.4 maxMC Report Screen 224
7.17.5 Report Sample 225

8 maxMC Database On-Demand Queries 226
8.1 maxMC Database Query Example 226

9 External Customization Program 230
9.1 Job Control System (JCS) Rules 230
9.1.1 Types of JCS Rules 230
9.1.2 Triggers of JCS Rules 230
9.1.3 JCS Rule Inputs 231
9.1.4 JCS Rule Outputs 231
9.2 External Customization Program (ECP) Rules 232
9.2.1 Types of ECP Rules 232
9.2.2 Triggers of ECP Rules 232
9.2.3 ECP Rule Inputs 233
9.2.4 ECP Rule Outputs 233
9.3 maxMC Core Functionality – Alerts 233

10 Letters 234
10.1 Reconsideration – Denial Upheld 235
10.1.1 Purpose 235
10.1.2 Creation Logic 235
10.1.3 Regulations by Review Name 235
10.1.4 Letter Template 236
10.2 Reconsideration – Denial Overturned 239
10.2.1 Purpose 239
10.2.2 Creation Logic 239
10.2.3 Regulations by Review Name 239
10.2.4 Letter Template 239
10.3 Reconsideration – Date Scheduled Notice 241
10.3.1 Purpose 241
10.3.2 Creation Logic 241

10.3.3 Letter Template 241
10.4 Reconsideration – Request out of Timeframe Notice 243
10.4.1 Purpose 243
10.4.2 Creation Logic 243
10.4.3 Letter Template 243
10.5 Durable Medical Equipment – Technical Denial 245
10.5.1 Purpose 245
10.5.2 Creation Logic 245
10.5.3 Regulations by Review Name 245
10.5.4 Letter Template 245
10.6 Impact Plus Eligibility - Approval 247
10.6.1 Purpose 247
10.6.2 Creation Logic 247
10.6.3 Regulations by Review Name 247
10.6.4 Letter Template 247
10.7 Impact Plus Eligibility - Denial 250
10.7.1 Purpose 250
10.7.2 Creation Logic 250
10.7.3 Regulations by Review Name 250
10.7.4 Letter Template 250
10.8 Impact Plus Eligibility – Denial 915 253
10.8.1 Purpose 253
10.8.2 Creation Logic 253
10.8.3 Regulations by Review Name 253
10.8.4 Letter Template 253
10.9 Impact Plus Service - Approval 256
10.9.1 Purpose 256
10.9.2 Creation Logic 256
10.9.3 Regulations by Review Name 256
10.9.4 Letter Template 256
10.10 Impact Plus Service - Denial 259
10.10.1 Purpose 259
10.10.2 Creation Logic 259
10.10.3 Regulations by Review Name 259
10.10.4 Letter Template 259
10.11 Lack of Information - Denial 262
10.11.1 Purpose 262
10.11.2 Creation Logic 262
10.11.3 Regulations by Review Name 262
10.11.4 Letter Template 263
10.12 Medical Necessity - Denial 266
10.12.1 Purpose 266
10.12.2 Creation Logic 266
10.12.3 Regulations by Review Name 266
10.12.4 Letter Template 267
10.13 Nursing Facility & Waiver – Level of Care Confirmation Notice 270
10.13.1 Purpose 270
10.13.2 Creation Logic 270
10.13.3 Regulations by Review Name 270
10.13.4 Letter Template 270
10.14 Nursing Facility & Waiver – Medical Necessity – Denial 272
10.14.1 Purpose 272
10.14.2 Creation Logic 272
10.14.3 Regulations by Review Name 272
10.14.4 Letter Template 273
10.15 Physician Services – Confirmation of Consent 276

10.15.1 Purpose ... 276
10.15.2 Creation Logic ... 276
10.15.3 Regulations by Review Name ... 276
10.16 Letter Template ... 276
10.17 Freestanding & Psych – PRTF – Approval ... 278
10.17.1 Purpose ... 278
10.17.2 Creation Logic ... 278
10.17.3 Regulations by Review Name ... 278
10.17.4 Letter Template ... 278
10.18 Freestanding & Psych – PRTF – Denial ... 281
10.18.1 Purpose ... 281
10.18.2 Creation Logic ... 281
10.18.3 Regulations by Review Name ... 281
10.18.4 Letter Template ... 281
10.19 Request for Information ... 284
10.19.1 Purpose ... 284
10.19.2 Creation Logic ... 284
10.19.3 Regulations by Review Name ... 284
10.19.4 Letter Template ... 285
10.20 Technical Denial ... 287
10.20.1 Purpose ... 287
10.20.2 Creation Logic ... 287
10.20.3 Regulations by Review Name ... 287
10.20.4 Letter Template ... 287
10.21 DAR – Daily Activity Report ... 289
10.21.1 Purpose ... 289
10.21.2 Creation Logic ... 289
10.21.3 Letter Template ... 289

11 Data Element Mapping ... 292
11.1 Care Review Provider ... 293
11.2 maxMC Provider ... 295
11.3 CareReview Member ... 299
11.4 maxMC Member ... 301
11.5 Provider Elements that are New for maxMC ... 305
11.6 Provider Elements that did not Transfer from CareReview ... 306
11.7 Member Elements that are New for maxMC ... 306
11.8 Member Elements that did not Transfer from CareReview ... 308

Window Privilege Profiles ... 309
Clinical Administrative Support – Level 1 ... 309
Window Access ... 309
Report Access ... 329
Other Access ... 329
Clinical Administrative Support – Level 2 ... 330
Window Access ... 330
Report Access ... 349
Other Access ... 350
Clinical Reviewer ... 351
Window Access ... 351
Report Access ... 370
Other Access ... 371
Manager ... 371
Window Access ... 371
Report Access ... 392
Other Access ... 392
Physician ... 393

Window Access 393
Report Access 413
Other Access 413
System Administrator 414
Window Access 414
Report Access 434
Other Access 435
View Only 435
Window Access 435
Report Access 455
Other Access 456

List of Calendar Codes and Definitions 457

List of Abbreviations and Acronyms 458

List of Modifiers 462

Open Case Definitions 475

CareReview to maxMC Conversion Interface Specification 478
File Layout 478
Mapping Table 481
Mapping Table 483

Outbound CareReview Conversion Interface Test Plan 485

Inbound maxMC Conversion Interface Specification 505

maxMC Member Interface File Layouts (Inbound from MMIS to maxMC) 527

maxMC Provider Interface File Layouts (Inbound from MMIS to maxMC) 530

maxMC Member Data Tables 534

maxMC Provider Data Table 538

Weekly Basic Child (Upload) Interface (Outbound from maxMC to DMHMR) 544

Prior Authorization Interface 547
KYMAA Prior Auth Header Record (for exchange of authorizations between interChange and maxMC) 547
maxMC Detail Record 553
DXC - Diagnoses 557
Pending Eligibility 557
Process Status History 559
LOC/Type of Care Code Mapping 559
Process Status History 560
Errors 561

Translation Tables 562
Service/Category Code Translation – Outbound LOC for JCS Rule 563
Service/Category Code Translation – Outbound PA 563
Service/Category Code Translation – Status/Reason Codes 566
Service/Category Code Translation – PA Case Type Category Codes 568
Service/Category Code Translation – Prior Authorization Status Codes 569

EDS Data Exchange Frequency 570

KAMES Layout (Outbound from MMIS to KAMES) 571

IMPACT Plus Services Approval File (Outbound from MMIS to DMHMR) 573

Interface Error Report Template 575

Note Templates **576**
Nursing Facility Level of Care 576
Home and Community Based Waiver Services 581
Model II Waiver Services 585
ICF/MR/DD Level of Care 586
Transplant Checklist – Medical Panel Liaison **588**
Lung Transplant Note Template – Physician Reviewer **590**
Orthodontics Checklist – Clinical Administrative Support **593**
maxMC rules **595**
Interface Error Messages **600**

Table of Figures

Figure 1: Flowchart Illustrating End-user Access of CareReview Data, via maxMC 149
Figure 2: Description of Case Search Data Fields in maxReview 150
Figure 3: Navigation in maxReview 151
Figure 4: Review Details, Accessed by Selecting the Review Detail Button 152
Figure 5: Physician's Notes, Accessed by Selecting the Notes Button 152
Figure 6: Medical Panel Review, Accessed by Selecting the Med. Panel Button 153
Figure 7: Impact Plus, Accessed by Selecting the Impact Plus Button 153
Figure 8: To Plan, Accessed by Selecting the To Plan Button 154
Figure 9: Patient Demographics, Accessed by Selecting the Patient Demographics Button 154
Figure 10: maxReview Integration into maxMC Utilizing API Connectivity 155
Figure 11: Shell Data 156
Figure 12: Overview of Interface Transactions 159
Figure 13: Member Interface Schematic 160
Figure 14: Provider Interface Schematic 161
Figure 15: Prior Authorization/Waiver Interface Schematic 162
Figure 16: IMPACT Plus/Basic Child Interface Schematic 163
Figure 17: KAMES Interface Schematic 163
Figure 18: Schematic of data processing 164
Figure 19: Example of Command-line Access via SSH 167
Figure 20: Data record window 169

Figure 21: Data records queue 170
Figure 22: maxReview integration into maxMC utilizing API connectivity 171
Figure 23: Manager Care Configuration window with CERME URL 172
Figure 24: Assessment Type Configuration window with InterQual 173
Figure 27-1: Run Database Query Screen 226
Figure 27-2: Executing Database Query 227
Figure 27-3: Saving Results from Database Query 228
Figure 27-4: Database Query Results in Excel 229

1 Introduction

This document provides a consolidated copy of all aspects of the maxMC system design including detailed descriptions of data models, external and internal interfaces, letter generation, and report generation. The Disaster Recovery document remains separate. Consolidated testing plans and results are also in a separate document.

2 Technical Overview

maxMC is a comprehensive, integrated suite of Medical Management software for managed care organizations, pharmacy benefit managers and other entities that administer healthcare plans and payments to member populations. A member-centric system, it assists in managing members across the continuum of care. **maxMC** is used by utilization management nurses, physicians, case and disease managers, and clinical support personnel to perform case management, disease management and utilization management activities. We will discuss the three components that make up the integrated suite. Those components are:

- maxMC Database;
- maxMC Rules Server; and,
- maxMC Data Import.

2.1 Technical Components

2.1.1 Application Architecture

1. Client/server app written in PowerBuilder and C/C++
2. Java and C++ for Web-based applications

2.1.2 Operational environment

1. Clients run in Windows XP and Citrix Metaframe XP
2. Servers run on Windows 2003 and Redhat Linux
3. Oracle Enterprise Database 10g
4. Onbase Document Management System

2.1.3 Technology infrastructure, software and services

1. HP Blade Center
2. VMWare ESX
3. Redundant SAN Fabric
4. EMC DMX and Clarion Storage Arrays

2.1.4 Service Delivery

1. Service Desk
2. Operational Reporting

2.1.5 Fax, Data, Letter

1. iFax
2. Onbase version 6.4
3. Extream version 5.0

2.2 Software Components

2.2.1 Oracle Database Server

The database server required to support the maxMC application.

- Oracle 10g 64 bit on Redhat Linux AS 4.0 64 bit

Hardware Required

- 4 CPU, 8GB memory, and at least 75GB of disk space.

2.2.2 Onbase

The document management software for faxes and documents related to utilization management cases.

Supporting programs:

- Onbase version 6.4
- iFax
- MS SQL Server 2000 Standard

Hardware Required:

- Database Server: 2 CPU 4GB 72 GB local storage, 50 GB SAN Storage
- Image repository: 300 GB CIFS/NAS accessible space
- PC with 2.2 GHz processor 512 MB RAM
- Fax Servers: 1 CPU 1 GB RAM 36 GB local storage, 1 Brooktrout TR1034 Fax Board

2.2.3 Exstream Letter Generation

Document generation software used to create letters from maxMC.

Supporting Programs:

- Exstream version 5.0
- MS Windows Server 2003 Standard

Hardware Required:

- 2CPU, 2GB, 72GB local storage, 50GB SAN storage

2.3 maxMC Components

2.3.1 maxMC Database

An Oracle database which houses the maxMC proprietary data model. The maxMC database is the core of the software suite and stores case management data as well as member and provider data.

2.3.1.1 Supporting Programs

- Oracle 8i, 91, or 10g client

- Windows 2000 Pro or Windows XP Program

2.3.1.2 Hardware Required

On the workstations where maxMC is installed, there should be at least 500 MB of free disk space, 256MB of memory, and a video card & monitor capable of 800x600 resolution

2.3.2 maxMC Rules Server (also known as JCS)

A CORBA-enabled workflow engine and rules processor that lets our systems evaluate site-driven workflow rules and trigger a wide variety of actions based on the change in the state of any data in a database. This component is written in C/C++ and executes TCL scripts.

2.3.2.1 Supporting Programs

- Windows 2000 Server Or Windows Server 2003

2.3.2.2 Hardware Required

- For production: 2 CPUs, 2GB of memory, and at least 1GB of available disk space.
- For non-production servers: 1 CPU, 1GB of memory, and 1GB of free disk space.

2.3.3 maxMC Data Import (also known as XAct)

A proprietary, server-based interface application that automatically loads, validates and transforms data from other systems in either batch or real-time. Written in C/C++ and TCL, this component also provides extensive logging/management tools that monitor and maintain incoming transactions from these systems.

2.3.3.1 Supporting Programs

Assuming the database server is 64 bit Redhat, then XAct should run on a separate server configured with Redhat ES 4.0 32 bit. Will need the GNU Make, C compiler, and BinUtils

2.3.3.2 Hardware Required

- For Production: Minimum 2 CPU server with 2GB of memory and 2GB of disk space.
- For Non-production: Minimum 1 CPU and 1GB of memory and 2GB of disk space.

2.4 Data Capture

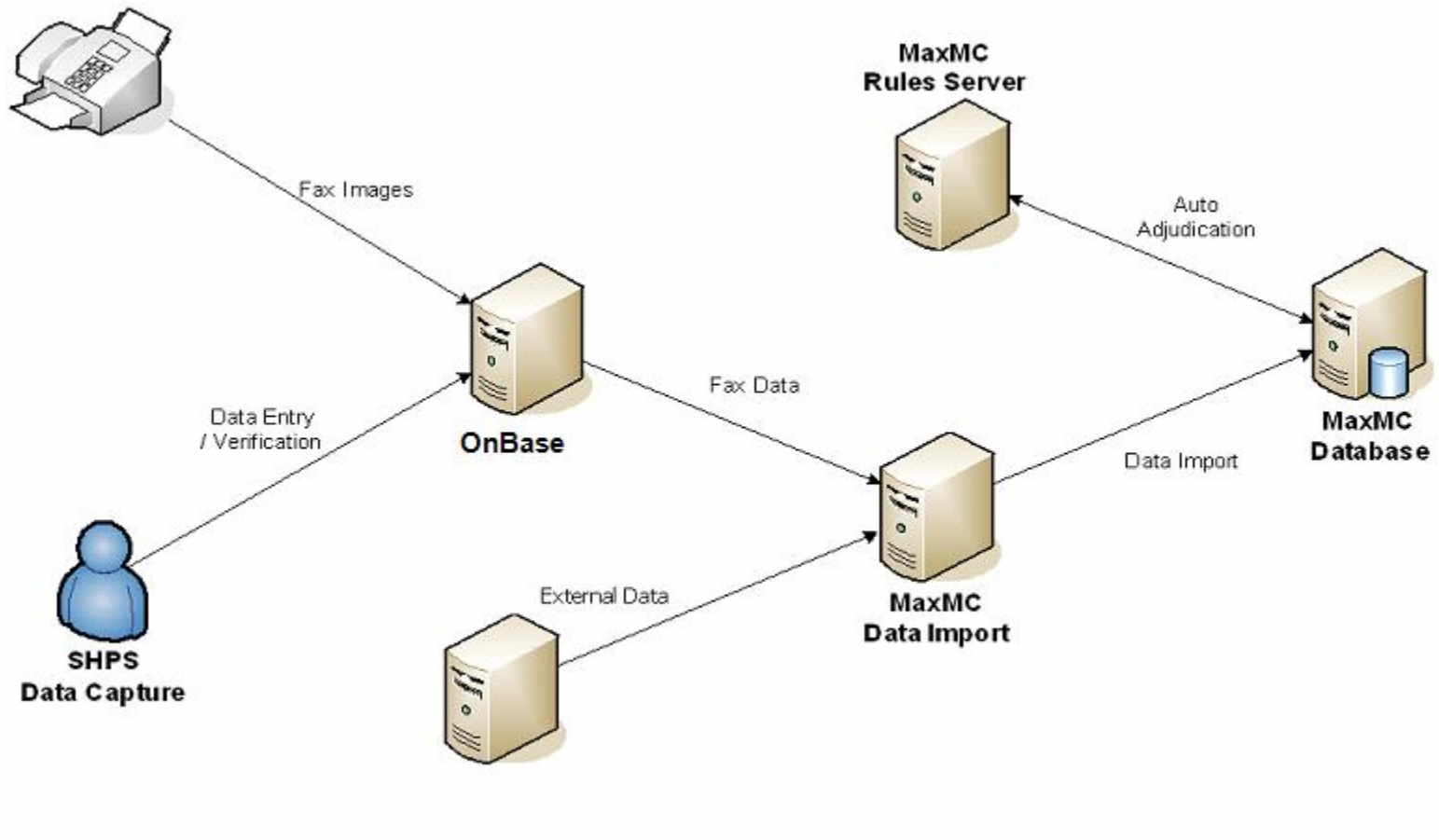

2.5 Case Management

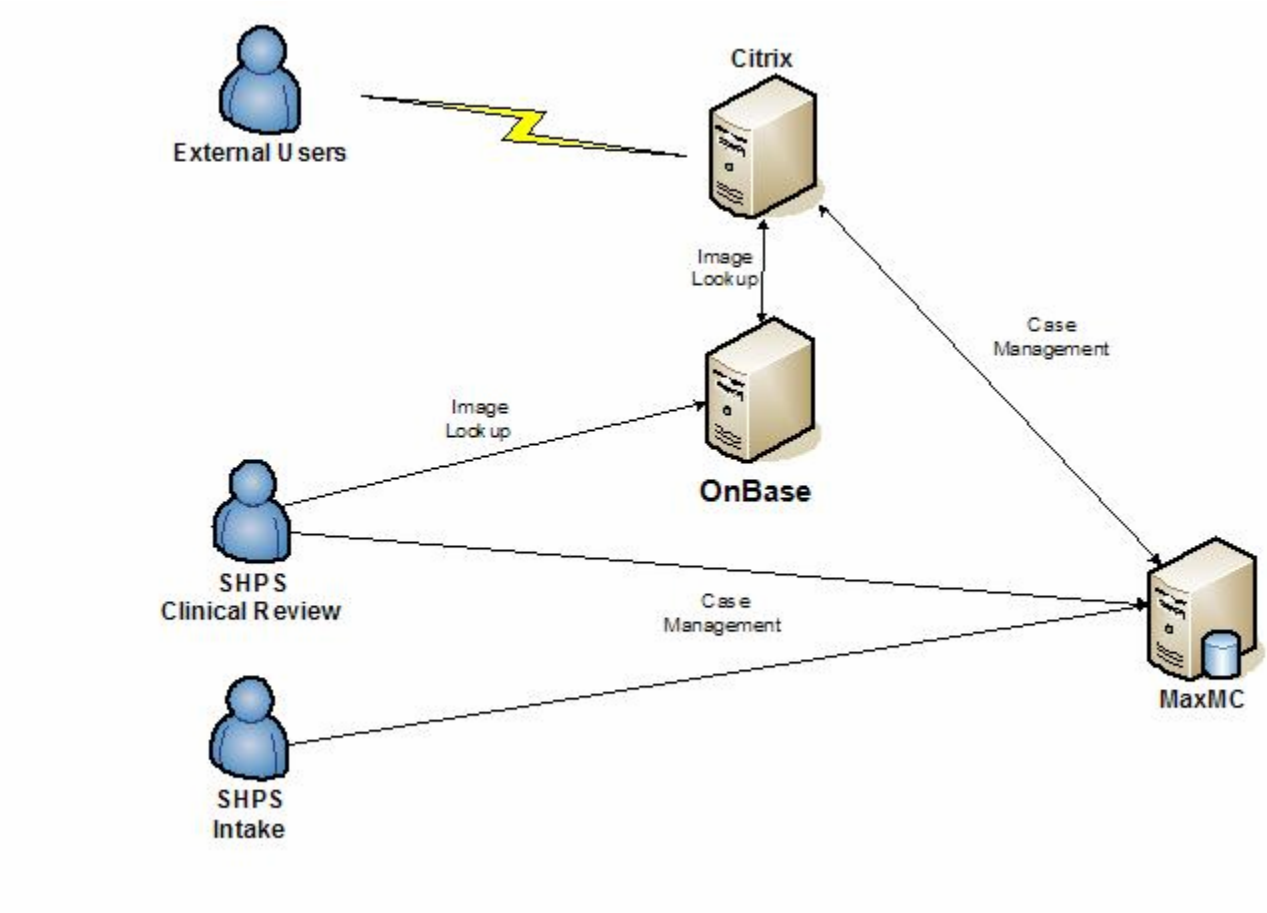

2.6 Letter Generation

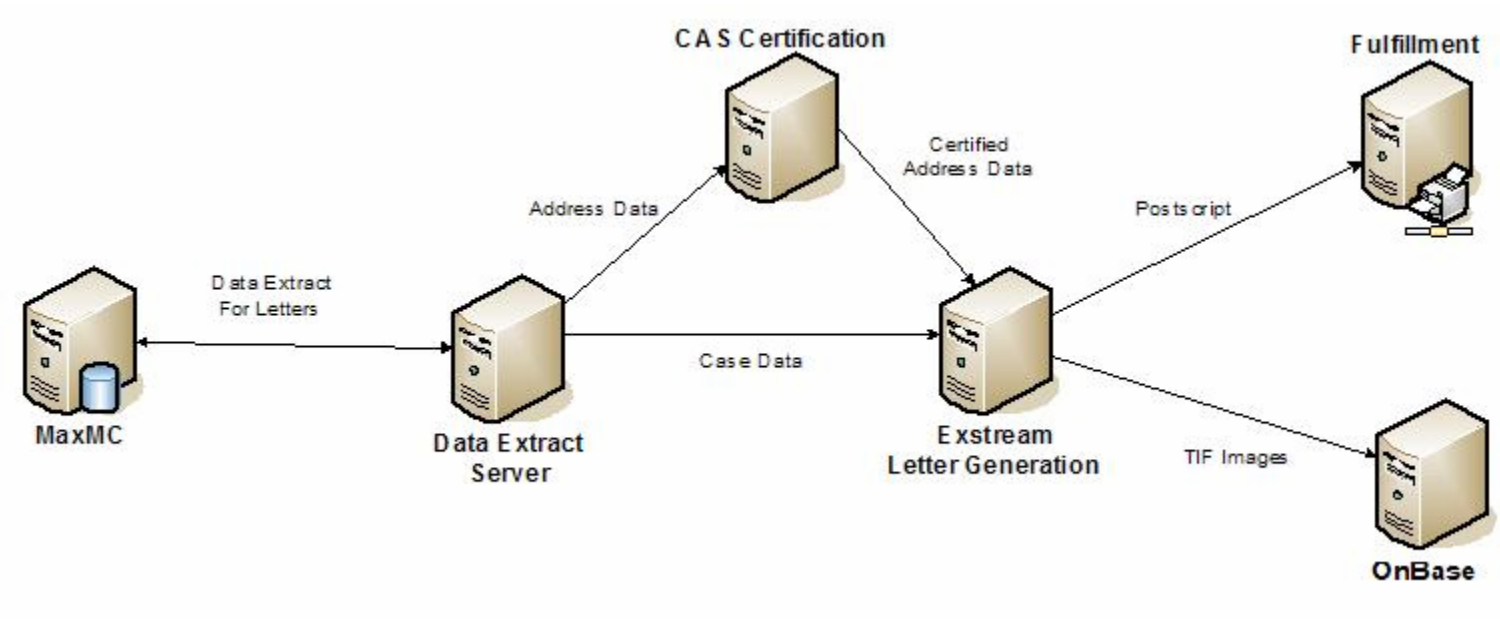

2.7 Infrastructure Diagram

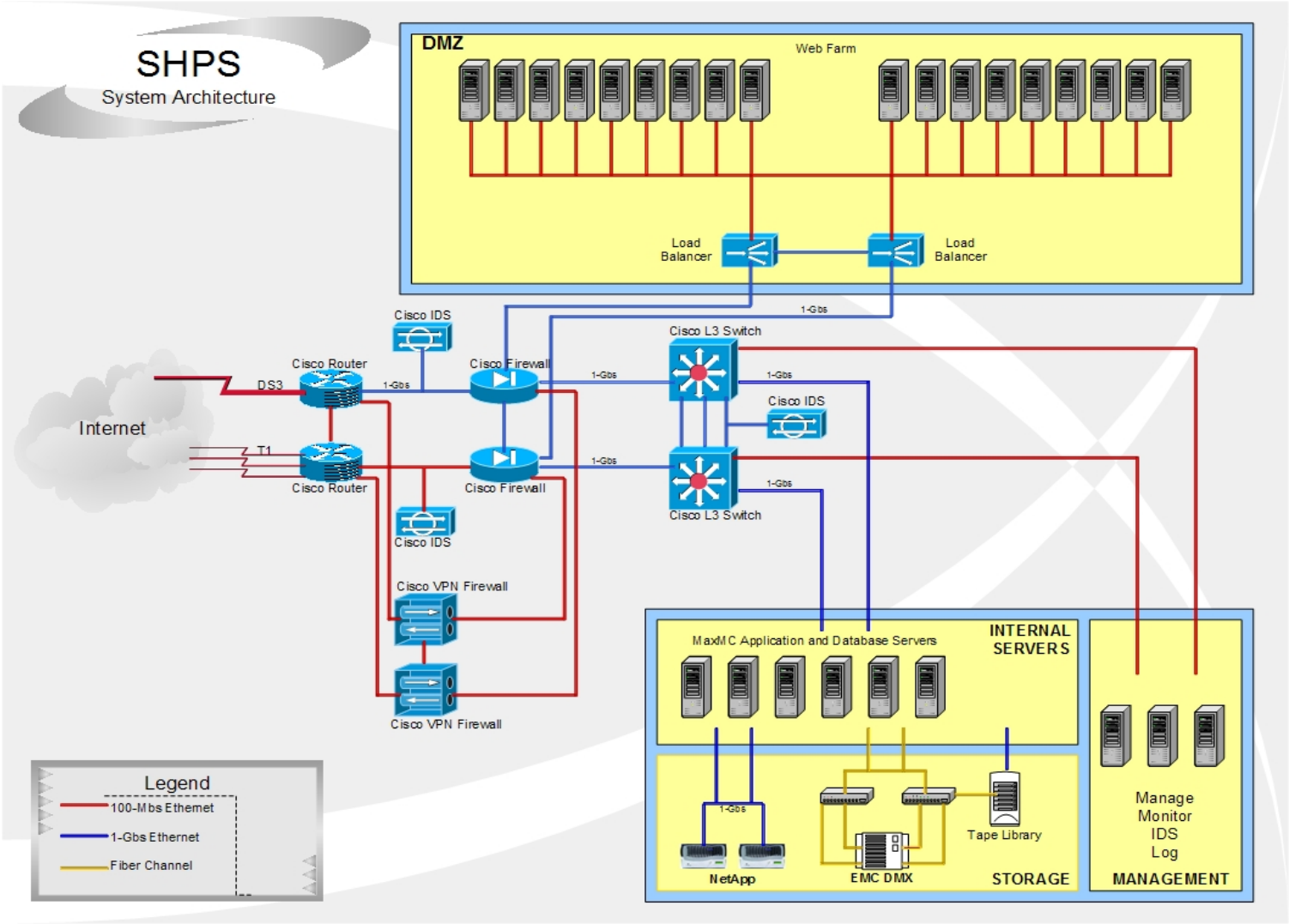

2.8 Solution Overview

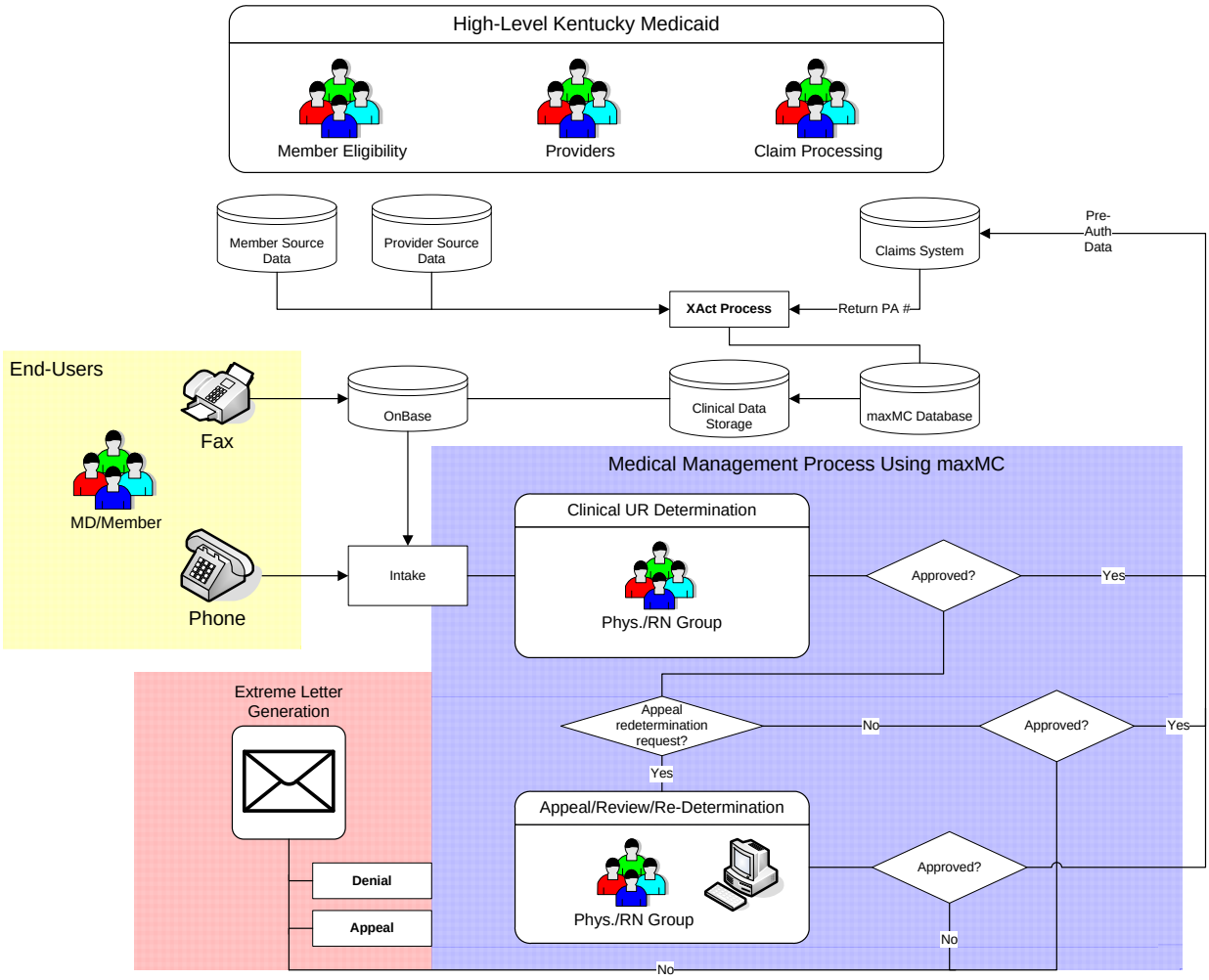

3 Configuration

This section details the Configuration Tables and data fields completed by SHPS KY Health Choices Department Director and Operational Managers under the guidance and collaboration of SHPS Implementation Specialists. The following are provided:

- Configuration Tables;
- Purpose of the Configuration Tables;
- Purpose of data fields within maxMC;
- Data decisions derived from the Health Insurance Portability and Accountability Act (HIPAA) values; operational processes, regulations, reporting, and workflows recommended by SHPS in conjunction with KyHealth Choices; and,
- Exclusion of Staff, Personal and Confidential Information (i.e. User IDs and Passwords)

3.1 Ancillary Staff Information

Allows the site to load staff members in maxMC.

Staff ID*	Gender
Formatted Name	Social Security Number
Last Name*	From
First Name*	Through
Middle Name	Hospital Service
Prefix	Department*
Suffix	Staff Category
Degree	Job Classification
Status	Job Title*
Date of Birth	

*Required field. Staff ID will be prefixed with either DMS, EDS, or FH, standing for Department for Medicaid Services, Electronic Data Systems, or First Health respectively.

3.1.1 Contact Information

Allows site to load staff contact information with specific fields displayed in a record lock message. *Required field.

Home Address Line 1	Work Phone 1*
Home Address Line 2	Work Phone 2*
City	Work Phone 3*
State	Facility Phone
Postal Code	Facility Box
Country	Paging Service
Home Phone 1*	Beeper Number
Home Phone 2*	Answering Service
Home Phone 3*	Car Phone
Restricted Numbers	Emergency Locator Code (used by SHPS)
	Emergency Locator Description (used by SHPS)

3.2 Ancillary Staff Supporting Tables

3.2.1 Departments

Allows the site to define operational internal departments.

Code	Description
CHIRO	Chiropractic
DENTAL	Dental
DME	DME
DRG	DRG
EPSDT	EPSDT
FIELD	Field Review
HH	Home Health
INPT	Inpatient Medical
LEADER	Leadership
LTC	Long-Term Care
MEDPNL	Medical Panel
PHYSRV	Physician Services
PSYCH	Psychiatric

Code	Description
WAIVER	Waiver Services

3.2.2 Staff Categories

Allows the site to define the type of staff categories.

Code	Description	System Meaning	General Staff	Nursing Staff	Physicians	Allied Health Professionals
ADMIN	Administration	Active	Y	N	N	N
EXTPHY	External Physician Reviewer	Active	N	N	Y	N
MEDDIR	Medical Director	Active	N	N	Y	N
MNGMNT	Management	Active	Y	Y	Y	Y
OPS	Operations	Active	Y	N	N	N
PHYRVW	Physician Reviewer	Active	N	N	Y	N
RN	Nurse	Active	N	Y	N	N
SW	Social Worker	Active	N	N	N	Y

3.2.3 Job Classification

Allows the site to define each internal staff member's job classification.

Code	Description	Medical Director	Physician Advisor	Pharmacist
NCLIN	Non-clinical	N	N	N
CLIN	Clinical	N	N	N
PHYS	Physician	Y	Y	N
OPS	Operations	N	N	N
ADMIN	Administrative	N	N	N

3.2.4 Job Title

Allows the site to define job titles for internal staff.

Code	Description
CAS1	Clinical Administrative Support I

Code	Description
CAS2	Clinical Administrative Support II
CLREV1	Clinical Reviewer I
CLREV2	Clinical Reviewer II
MPL	Medical Panel Liaison
NCMGR	Non-clinical Manager
CLNMGR	Clinical Manager
PHYSRV	Physician Reviewer
EXTPHY	External Physician Reviewer
MEDDIR	Medical Director
OPSAN	Operations Analyst
TRAINE	Training Specialist
QA	Quality Analyst
DIR	Director
SYSADM	System Administrator

3.2.5 Emergency Code Locator

Code	Description
EXT	Extension

3.3 Appeals

3.3.1 Appeal Relationships

Allows the site to define the types of relationships individuals can have with members. We will use the attorney as an example of how to read the table. If an attorney submits an appeal request for a member, then he does not have a relationship with the performing provider but does have one with the member.

Code	Description	Applicable to MD	Role	Type	Applicable to Representative	Type	Representative Statement Required
ATTY	Attorney	No	None	None	Yes	Attorney	Yes
DURPOA	Durable Power of Attorney	No	None	None	Yes	Power of Attorney	Yes

Code	Description	Applicable to MD	Role	Type	Applicable to Representative	Type	Representative Statement Required
GUARD	Legal Guardian	No	None	None	Yes	Legal Guardian	Yes
OTHER	Other	No	On Behalf Of	Other	Yes	Other	Yes
PARENT	Parent	No	None	None	Yes	Legal Guardian	No
PROVID	Provider	Yes	In Sup-port Of	PCP	No	(None)	No

3.3.2 Appeal Types

Code	Description	System Meaning	# of Days	Units	Edit Response Time	Use CHDR Tab
RR	Reconsideration Request	Reconsideration Request	30	Business Days	Y	N
EXRECO	Expedited Reconsideration	Reconsideration Request	3	Business Days	Y	N
ADMIN	Administrative Hearings	Other	0	Business Days	Y	N

3.3.3 Appeal Reasons

Allows the site to design the reasons authorization requests are appealed. For example, a provider may submit additional information that warrants review. In this case the appeal reason would be logged as ADDINF.

Code	Description
ADDINF	Additional Clinical Information Submitted
BENEXC	Request for Benefit Exception
CHGBEN	Change in Benefit Structure
CLIENT	Client Request

Code	Description
NOINFO	Request w/o Additional Medical Information

3.3.4 Appeal Decisions

Allows the site to configure Appeal Decisions and link to the appropriate Appeal Types.

Appeal Decisions	Description	System Meaning	Appeal Type	Description	Allow All
DENUPH	Denial Upheld	Denial Upheld/Appeal Denied	RR EXPRECON ADMINH	RECONSIDERATION REQUEST EXPEDITED RECONSIDERATION ADMINISTRATIVE HEARING	Y
DENOVT	Denial Overturned	Denial Overturned/ Appeal Approved	RR EXPRECON ADMINH	RECONSIDERATION REQUEST EXPEDITED RECONSIDERATION ADMINISTRATIVE HEARING	Y
DENMOD	Denial Modified	Denial Partially Overturned	RR EXPRECON ADMINH	RECONSIDERATION REQUEST EXPEDITED RECONSIDERATION ADMINISTRATIVE HEARING	Y

3.3.5 Appeal Categories

Allows the site to define the different categories of appeals.

Code	Description
ACUTIP	Acute Inpatient
ANCILL	Ancillary
BEHAV	Behavioral Health
CHIRO	Chiropractic Services
DENTAL	Dental
DME	DME
EPSDT	EPSDT
HHCS	Home Health

Code	Description
HOSPCE	Hospice
IMPPLS	Impact Plus
NSGFAC	Nursing Facility
OUTPT	Outpatient
PCO	PCO
PHYSER	Physician Services
PRTF	PRTF
TRANSP	Transplant
WAIVER	Waiver

3.3.6 Reasons Appeal Review not Performed

This field allows the site to define the reason an appeal was not continued.

Code	Description	Valid for Met	Valid for Not Met
DUP	Duplicate Request was received	N	Y
LATE	Not Within the Allowed Timeframe	N	Y
VALID	A Valid Request has been Received	Y	N
NODEND	No Denied Service	N	Y

3.3.7 Appeal Override Reasons

Allows the site to configure reasons for overriding a date and time associated with an appeal. This function is controlled by the security level of the user.

Code	Description	Applicable to Date/Time Overrides	Applicable to Reopened Appeals
ADMAPP	Administrative Approval	Y	Y
CLIENT	Client Request	Y	Y
MISINF	Misinformation Provided	Y	N

3.3.8 Appeal Extension Reasons

Allows the site to configure the reasons an extension was requested for an appeal. This function is controlled by the security level of the user.

Code	Description
ADMEXT	Administrative Extension

3.3.9 Contact Reasons-Appeals

Allows the site to enter contact information about communication relevant to the request.

Code	Description
APPINQ	Reconsideration Status Inquiry
CMPAPP	Reconsideration Process Complaint
CMPPVD	Provider Complaint
NEWINF	New Information

3.4 Assessment Supporting Tables

3.4.1 Assessment Types

Allows the site to assign a type to each assessment.

Code	Description	System Meaning	Care Coordination	Case Management	OB Information	Contact Management	Medical Administrative Reviews
HCBWS	HCB Waiver Services	Note Template	Y	N	N	N	N
ICFMR	ICF MR DD LOC	Note Template	Y	N	N	N	N
IQCC	InterQual CC	Note Template	Y	N	N	N	N
IQCM	InterQual CM	Note Template	N	Y	N	N	N
MODEL2	Model II Waiver Services	Note Template	Y	N	N	N	N
NFLOC	Nursing Facility LOC	Note Template	Y	N	N	N	N
PSYDEN	Psych Review Denials	Note Template	N	N	N	N	Y
TRANSP	Transplant - MPL	Note Template	N	N	N	N	Y
ORTHOD	Orthodontics	Note Template	N	N	N	N	Y
LTAC	Long Term Acute Care	Note Template	N	N	N	N	Y

Code	Description	System Meaning	Care Coordination	Case Management	OB Information	Contact Management	Medical Administrative Reviews
LNGTNS	Lung Transplant – Physician Reviewer	Note Template	N	N	N	N	Y

3.4.2 Reasons for Override

Allows the site to define the reasons the evaluation of a criteria assessment was overridden. It can also be used in the Case Management Screening Tool to override the Case Level Tool Outcome.

Code	Description
ADMINDIR	Administrative Directive
NSGJUDGE	Nursing Judgment

3.5 Care Coordination

3.5.1 Authorization Profiles

Can be selected to expedite data entry for common case types.

Description	Place of Service	Service	Status	Reason	Code	Description	Code	Description	Quant	Units
C-Section	Inpatient Hospital	Maternity	Certified As Profile Component	Meets Criteria/ Guidelines	59510	Routine obstetric care including ante-partum care, cesarean delivery, and postpartum care	59515	Cesarean delivery only; including postpartum care	4	Day
Normal Vaginal	Inpatient Hospital	Maternity	Certified As Profile Component	Meets Criteria/ Guidelines	59400	Routine obstetric care including ante-partum care, vaginal delivery (with or without episiotomy, and/or forceps) and postpartum care	59410	Vaginal delivery only (with or without episiotomy and/or forceps); including postpartum care	2	Day

3.5.2 Event Classifications

Allows the site to configure codes and descriptions for event classifications used at the organization.

Code	Description	System Meaning	System Record
ELEC	Elective (Scheduled)	Other (Non-HIPAA)	N
U	Urgent	Urgent	Y
RETRO	Retrospective	Other (Non-HIPAA)	N

3.5.3 Case Types

Allows the site to configure additional information about the types of requests received.

Code	Description
TRANS	Transplant
ACUTIP	Acute Inpatient
NFAC	Nursing Facility
WAIVER	Waiver
HHCS	Home Health
DME	DME
CHIRO	Chiropractic
EPSDT	EPSDT
IMPLUS	Impact Plus
PRTF	PRTF
DENTAL	Dental / Orthodontics
PHYSER	Physician Services
HOSPIC	Hospice
OUTPT	Outpatient

3.5.4 Authorization Status

Allows the site to enter the possible status values of authorization records.

Code	Description	System Meaning	System Record
A1_APF	Certified As Profile Component	Certified in Total	N
A4	Pended	Pended	Y
A6	Modified	Modified	Y
CXL	Canceled	Canceled	Y
CERT	Certified	Certified in Total	N
DENIED	Denied	Not Certified	N
UNREV	Unreviewed Home Health	Pended	N
ADMUPH	Administrative Hearing Upheld	Not Certified	N
ADMOV	Administrative Hearing Overturned	Certified in Total	N
ADMM	Administrative Hearing Modified	Modified	N
RECONU	Reconsideration Upheld	Not Certified	N
RECDEN	Reconsideration Overturned	Certified in Total	N
RECMOD	Reconsideration Modified	Modified	N

3.5.5 Determination Reasons

Allows the site to configure the reasons an authorization status was set for a service.

Code	Description	System Meaning	Canceled	Certified in Total	Contact Payer	Modified	No Action Required	Certified	Pended
ADMCXL	Admission Cancelled	Other (Non-HIPAA) Reason	Y	N	N	N	Y	N	N
BENEXC	Benefit Exception	Other (Non-HIPAA) Reason	N	Y	N	Y	N	N	N
BENMAX	Benefit Maxed	Exceeds Plan Annual Maximums	N	N	N	Y	N	Y	N
DENTRY	Data Entry Error	Other (Non-HIPAA) Reason	Y	N	N	N	Y	N	N
MCPRIM	Medicare Primary	Certification Responsibility of External Review	Y	N	N	N	Y	N	N
PXCCXL	Procedure Cancelled	Other (Non-HIPAA) Reason	Y	N	N	N	Y	N	N
REQWD	Request Withdrawn	Other (Non-HIPAA) Reason	Y	N	N	N	Y	N	N
STATE	State Mandate	Other (Non-HIPAA) Reason	N	Y	N	Y	N	N	N
TMM	Targeted Medical Management	Other (Non-HIPAA) Reason	N	Y	N	N	N	Y	N
82	Not Medically Necessary	Not Medically Necessary	N	N	Y	N	N	N	N

Code	Description	System Meaning	Canceled	Certified in Total	Contact Payer	Modified	No Action Required	Certified	Pended
91	Duplicate Request	Duplicate Request	Y	N	Y	N	Y	Y	N
ADMCXL	Admission Canceled	Other (Non-HIPAA) Reason	Y	N	Y	N	Y	N	N
ADMHRD	Admin Hearing Determination	Other (Non-HIPAA) Reason	N	N	Y	Y	N	Y	N
BENEXC	Benefit Exception	Other (Non-HIPAA) Reason	N	Y	Y	Y	N	N	N
BENMAX	Benefit Maxed	Exceeds Plan Maximums	N	N	Y	N	N	Y	N
CLREV	Client Review	Other (Non-HIPAA) Reason	N	N	Y	Y	N	Y	Y
CONSNT	Consent	Requires Medical Review	N	N	Y	N	N	N	Y
CRITER	Meets Criteria/Guidelines	Other (Non-HIPAA) Reason	N	Y	Y	Y	N	N	N
DENTRY	Data Entry Error	Other (Non-HIPAA) Reason	Y	N	Y	N	N	N	N
INSUFF	Insufficient Information	Requested Information Not Received	N	N	Y	N	N	Y	N
LOI	Lack of Information	Requested Information Not Received	N	N	Y	N	N	Y	Y

Code	Description	System Meaning	Canceled	Certified in Total	Contact Payer	Modified	No Action Required	Certified	Pended
MCPRIM	Medicare Primary	Certification Responsibility of External Review	N	N	Y	N	N	Y	N
MDREV	MD Review	Requires Medical Review	N	Y	Y	Y	N	N	Y
MEDNEC	Meets Medical Necessity	Other (Non-HIPAA) Reason	N	Y	Y	Y	N	N	N
NCBED	Non-Certified Bed	Other (Non-HIPAA) Reason	N	N	Y	N	N	Y	N
NCBEN	Not a Covered Benefit	Other (Non-HIPAA) Reason	N	Y	Y	N	N	Y	N
OOTF	Out of Time Frame	Other (Non-HIPAA) Reason	N	N	Y	N	N	Y	N
PXCCXL	Procedure Canceled	Other (Non-HIPAA) Reason	Y	N	Y	N	Y	N	N
REQWD	Request Withdrawn	Other (Non-HIPAA) Reason	Y	N	Y	N	Y	N	N
RNREV	RN Review	Requires Medical Review	N	Y	Y	Y	N	N	Y
STATE	State Mandate	Other (Non-HIPAA) Reason	N	Y	Y	Y	N	N	N
TECH	Technical Denial	Other (Non-HIPAA) Reason	N	N	Y	N	N	Y	N

Code	Description	System Meaning	Canceled	Certified in Total	Contact Payer	Modified	No Action Required	Certified	Pended
TMM	Targeted Medical Management	Requires Medical Review	N	N	Y	N	N	N	Y

3.5.6 Outcome Indicators for Inpatient Reviews

Outcome indicators as a result of an Inpatient Review.

Code	Description	System Meaning	Initial Authorization	Initial Denial	Initial Request	Extension Authorization	Extension Denial	Extension Request
82	Not Medically Necessary	Not Medically Necessary	N	Y	N	N	Y	N
87	Exceeds Plan Maximums	Exceeds Plan Maximums	N	Y	N	N	Y	N
88	Non-covered Service	Non-covered Service	N	Y	N	N	Y	N
90	Requested Information Not Received	Requested Information Not Received	N	Y	N	N	Y	N
ADMAPP	Administrative Approval	Other (Non-HIPAA) Reason	Y	N	N	Y	N	N
ADMREQ	Admission Requested	Other (Non-HIPAA) Reason	N	N	Y	N	N	N
BENEXC	Benefit Exception	Other (Non-HIPAA) Reason	Y	N	Y	Y	N	Y
EXTREQ	Extension Requested	Other (Non-HIPAA) Reason	N	N	N	N	N	Y

Code	Description	System Meaning	Initial Authorization	Initial Denial	Initial Request	Extension Authorization	Extension Denial	Extension Request
LOI	Lack of Information	Requested Information Not Received	N	Y	Y	N	Y	Y
MEDNEC	Meets Medical Necessity	Other (Non-HIPAA) Reason	Y	N	Y	Y	N	Y
NCBED	Non-Certified Bed	Non-Covered Service	N	Y	Y	N	Y	Y
OOTF	Out of TimeFrame	Authorization/Access Restrictions	N	Y	Y	N	Y	Y
TMM	Targeted Medical Management	Other (Non-HIPAA) Reason	Y	N	Y	Y	N	Y
TECH	Technical Denial	Authorization/Access Restrictions	N	Y	Y	N	Y	Y

3.5.7 Levels of Care

Allows the site to document the LOC the member received during a period of time while in an inpatient setting.

Code	Description
DRG	DRG
LTAC	LTAC
MEDSRG	Medical/Surgical
NEONAT	Neonatal ICU
NSGFAC	Nursing Facility
OBSTET	Obstetrical
PEDS	Pediatric
PSYCH	Psych Bed
REHAB	Rehabilitation
SUBST	Substance Abuse
WAIV	Waiver

3.5.8 Discharge Dispositions

Enables the site to define the attributes of dispositions.

Code	Description
01	Discharged to Home or Self Care
02	Discharged/Transferred to Another Short Term General Hospital
03	Discharged/Transferred to SNF with Medicare Certification
04	Discharged/Transferred to an Intermediate Care Facility (ICF)
05	Discharged/Transferred to Another Type of Institution
06	Discharged/Transferred to Home Under Care of Organized Home Health Service
07	Left Against Advice or Discontinued Care
08	Discharged/Transferred to Home Under Care of Home IV Provider
09	Admitted as an Inpatient to this Hospital
20	Expired

Code	Description
40	Expired at Home
42	Expired - Place Unknown
43	Discharged/Transferred to a Federal Hospital
50	Discharged to Hospice - Home
51	Discharged to Hospice - Medical Facility
61	Discharged/Transferred within this Institution to Hospital-Based Medicare Swing-Bed
62	Discharged/Transferred to an Inpatient Rehabilitation Facility
63	Discharged/Transferred to a Medicare Certified Long Term Care Hospital
64	Discharged/Transferred to a Nursing Facility Certified Under Medicaid
65	Discharged/Transferred to a Psychiatric Hospital

3.5.9 Review Reasons

Allows the site to define the reasons a request was sent for Medical Review, Administrative Review, or Reconsideration.

Code	Description	Medical Review	Administrative Review	Reconsideration
LOWLOC	Appropriate for Lower Level of Care	Y	Y	Y
TRNSFR	Awaiting Transfer	Y	Y	Y
AVAALT	Care Available in Alternate Setting	Y	Y	Y
AVAOP	Care Available as Outpatient	Y	Y	Y
BENEXC	Benefit Exception	Y	Y	Y
COMPLI	Complications During Stay	Y	Y	Y
CRITDN	Does Not Meet Criteria or Guidelines	Y	Y	Y
CUSTOD	Custodial	Y	Y	Y
DELSVC	Delay in Services	Y	N	Y
EXPINV	Experimental/ Investigation	Y	Y	Y
EXPMAX	Exceeds Plan Maximums	Y	Y	Y

Code	Description	Medical Review	Administrative Review	Reconsideration
INSUFF	Insufficient Medical Information	Y	Y	Y
LOS	Length of Stay	Y	Y	Y
NOGUID	No Guidelines Available	Y	Y	Y
NONCVD	Non-Covered Service	Y	Y	Y
PXCOS	Procedure is Cosmetic	Y	Y	Y
RINFNR	Requested Information Not Received	Y	Y	Y
ADHR	Administrative Hearing	N	Y	N
EXRECO	Expedited Reconsideration	N	N	Y
RECON	Reconsideration	N	N	Y

3.5.10 Outcome Reasons

Allows the site to define justifications for review and appeal outcomes.

Code	Description	Authorized	Denied	Escalated	Canceled	Pending
BENMAX	Benefits Maxed	N	Y	N	N	N
EXPINV	Experimental / Investigative	N	Y	N	N	N
MEDNEC	Medically Necessary	Y	N	N	N	N
NMEDNE	Not Medically Necessary	N	Y	N	N	N
RQWD	Request Withdrawn	N	N	N	Y	N
NONCVD	Non-Covered Service	N	Y	N	N	N

3.5.11 Treatment Procedure Groups

Allows the site to enter details about treatment procedure groups.

Code	Type	Code	Description	Code	Description
MSTPXY	CPT	19316	Mastopexy	19316	Mastopexy
REDMMP	CPT	19318	Reduction Mammoplasty	19318	Reduction Mammoplasty

Code	Type	Code	Description	Code	Description
MMPLST	CPT	19324	Mammoplasty, augmentation; without prosthetic implant	19325	Mammoplasty, augmentation; with prosthetic implant
REMOVM	CPT	19328	Removal of intact mammary implant	19328	Removal of intact mammary implant
REMOVI	CPT	19330	Removal of mammary implant material	19330	Removal of mammary implant material
REDFH	CPT	21137	Reduction forehead; contouring only	21139	Reduction forehead; contouring and setback of anterior frontal sinus wall
LEFORI	CPT	21141	Reconstruction Midface, LeFort I; single piece, segment movement in any direction (e.g. For Long Face Syndrome), without bone graft	21143	Reconstruction Midface, LeFort I; three or more pieces, segment movement in any direction without bone graft
LEGRFT	CPT	21145	Reconstruction Midface, LeFort I; single piece, movement in any direction requiring bone grafts(includes obtaining autografts)	21145	Reconstruction Midface, LeFort I; three or more pieces, segment movement in any direction requiring bone grafts (includes obtaining autografts) (e.g. Ungrafted bilateral alveolar cleft or multiple osteotomies)
LEFII	CPT	21150	Reconstruction midface, LeFort II, anterior intrusion (e.g. Treacher-Collins Syndrome)	21151	Reconstruction midface, LeFort II, any direction, requiring bone grafts (includes obtaining autografts)
LAFIII	CPT	21154	Reconstruction midface, LeFort III (extracranial), any type, requiring bone grafts (includes obtaining autografts); without LeFort I	21155	Reconstruction midface, LeFort III (extracranial), any type, requiring bone grafts (includes obtaining autografts); with LeFort I

Code	Type	Code	Description	Code	Description
LGRIII	CPT	21159	Reconstruction midface, LeFort III (extra and intracranial), with forehead advancement (e.g. Mono bloc), requiring bone grafts (includes obtaining autografts); without LeFort I	21160	Reconstruction midface, LeFort III (extra and intracranial), with forehead advancement (e.g. Mono bloc), requiring bone grafts (includes obtaining autografts); with LeFort I
RCNMAD	CPT	21193	Reconstruction of mandibular rami, horizontal, vertical, C, or L osteotomy; without bone graft	21196	Reconstruction of mandibular rami and/or body, surgical split; with internal rigid fixation
OSTMAD	CPT	21198	Osteotomy, mandible, segmental	21198	Osteotomy, mandible, segmental
OSTMAX	CPT	21206	Osteotomy, maxilla, segmental (eg. Wassmund or Schuchard)	21206	Osteotomy, maxilla, segmental (eg. Wassmund or Schuchard)
RPLSRI	CPT	30400	Rhinoplasty, primary; lateral and alar cartilages and/or elevation of nasal tip	30400	Rhinoplasty, primary; lateral and alar cartilages and/or elevation of nasal tip
RPSTCM	CPT	30410	Rhinoplasty, complete, external parts including bony pyramid, lateral and alar cartilages, and/or elevation of nasal tip	30410	Rhinoplasty, complete, external parts including bony pyramid, lateral and alar cartilages, and/or elevation of nasal tip
RPLSPT	CPT	30420	Rhinoplasty, including major septal repair	30420	Rhinoplasty, including major septal repair
RPLSEC	CPT	30430	Rhinoplasty, secondary; minor revision (small amount of nasal tip work)	30430	Rhinoplasty, secondary; minor revision (small amount of nasal tip work)
RPLINT	CPT	30435	Rhinoplasty, intermediate revision (bony work with osteotomies)	30435	Rhinoplasty, intermediate revision (bony work with osteotomies)

Code	Type	Code	Description	Code	Description
RPLMAJ	CPT	30450	Rhinoplasty, major revision (nasal tip work and osteotomies)	30450	Rhinoplasty, major revision (nasal tip work and osteotomies)
RPLSTYTIP	CPT	30460	Rhinoplasty, for nasal deformity secondary to congenital cleft lip and/or palate, including columellar lengthening, tip only	30460	Rhinoplasty, for nasal deformity secondary to congenital cleft lip and/or palate, including columellar lengthening, tip only
RPLSTYTSO	CPT	30462	Rhinoplasty, for nasal deformity secondary to congenital cleft lip and/or palate, including columellar lengthening, tip, septum, osteotomies	30462	Rhinoplasty, for nasal deformity secondary to congenital cleft lip and/or palate, including columellar lengthening, tip, septum, osteotomies
REPNVS	CPT	30465	Repair of nasal vestibular stenosis (eg, spreder grafting, lateral nasal wall reconstruction)	30465	Repair of nasal vestibular stenosis (eg, spreder grafting, lateral nasal wall reconstruction)
SPLSTY	CPT	30520	Septoplasty or submucous resection, with or without cartilage scoring, contouring or replacement with graft	30520	Septoplasty or submucous resection, with or without cartilage scoring, contouring or replacement with graft
LAPGAS	CPT	43644	Laparoscopy, surgical, gastric restrictive procedure; with gastric bypass and Roux-en-Y gastroenterostomy (roux limb 150 cm or less)	43645	Laparoscopy, surgical, gastric restrictive procedure; with gastric bypass and small intestine reconstruction to limit absorption
UNLAP	CPT	43659	Unlisted laparoscopy procedure, stomach	43659	Unlisted laparoscopy procedure, stomach
LGBAND	CPT	43770	Laparoscopy, surgical, gastric restrictive procedure; placement of adjustable gastric band (gastric band and subcutaneous port components)	43774	Laparoscopy, surgical, gastric restrictive procedure; removal of adjustable gastric band and subcutaneous port components

Code	Type	Code	Description	Code	Description
GPLAST	CPT	43842	Gastric restrictive procedure, without gastric bypass, for morbid obesity; vertical-banded gastroplasty	43842	Gastric restrictive procedure, without gastric bypass, for morbid obesity; vertical-banded gastroplasty
GTRCTM	CPT	43845	Gastric restrictive procedure, with partial gastrectomy, pylorus-preserving duodenoileostomy and ileoilostomy (50 to 100 cm common channel) to limit absorption (biliopancreatic diversion with duodenal switch)	43848	Revision, open, of gastric restrictive procedure for morbid obesity, other than adjustable gastric band (separate procedure)
GDUOD	CPT	43850	Revision of gastroduodenal anastamosis (gastroduodenotomy) with reconstruction; without vagotomy	43850	Revision of gastroduodenal anastamosis (gastroduodenotomy) with reconstruction; without vagotomy
GDUODV	CPT	43855	Revision of gastroduodenal (gastroduodenotomy) with reconstruction; with vagotomy	43855	Revision of gastroduodenal anastamosis (gastroduodenotomy) with reconstruction; with vagotomy
GJEJUN	CPT	43860	Revision of gastrojejunostomy anastamosis (gastrojejunostomy) with reconstruction; with or without partial gastrectomy or intestine resection; without vagotomy	43860	Revision of gastrojejunostomy anastamosis (gastrojejunostomy) with reconstruction; with or without partial gastrectomy or intestine resection; without vagotomy

Code	Type	Code	Description	Code	Description
GJEJUV	CPT	43865	Revision of gastrojejunostomy anastamosis (gastrojejunostomy) with reconstruction; with or without partial gastrectomy or intestine resection; with vagotomy	43865	Revision of gastrojejunostomy anastamosis (gastrojejunostomy) with reconstruction; with or without partial gastrectomy or intestine resection; with vagotomy
GREMOV	CPT	43887	Gastric restrictive procedure, removal of subcutaneous port component only	43888	Gastric restrictive procedure, removal and replacement of subcutaneous port component only
UNSTOM	CPT	43999	Unlisted procedure, stomach	43999	Unlisted procedure, stomach
ABRTDL	CPT	59840	Induced abortion, by dilation and curettage	59841	Induced abortion, by dilation and evacuation
ABRTNJ	CPT	59850	Induced abortion, by one or more intra-amniotic injections (amniocentesis-injections), including hospital admission and visits, delivery of fetus and secundines	59852	Induced abortion, by one or more intra-amniotic injections (amniocentesis-injections), including hospital admission and visits, delivery of fetus and secundines with hysterotomy(failed intra-amniotic injection)
ABRTSUP	CPT	59855	Induced abortion, by one or more vaginal suppositories (e.g. Prostaglandin) with or without cervical dilation (e.g. Laminaria), including hospital admission and visits, delivery of fetus and secundines	59857	Induced abortion, by one or more vaginal suppositories (e.g. Prostaglandin) with or without cervical dilation (e.g. Laminaria), including hospital admission and visits, delivery of fetus and secundines with hysterotomy (failed medical evacuation)
MULTRD	CPT	59866	Multifetal pregnancy reduction(s)	59866	Multifetal pregnancy reduction(s)
UNFETL	CPT	59897	Unlisted fetal invasive procedure, including ultrasound guidance	59897	Unlisted fetal invasive procedure, including ultrasound guidance

Code	Type	Code	Description	Code	Description
RPRBRW	CPT	67900	Repair of brow ptosis (supraciliary, mid-forehead or coronal approach)	67906	Repair of brow ptosis, superior rectus technique with fascial sling (includes obtaining fascia)
BLEPH	CPT	67908	Repair of brow ptosis, conjunctivo-tarso-Muller's muscle-levator resection (e.g. Fasanella-Servat type)	67908	Repair of brow ptosis, conjunctivo-tarso-Muller's muscle-levator resection (e.g. Fasanella-Servat type)
CORLID		67911	Correction of lid retraction	67911	Correction of lid retraction
TPUMP	HCPCS	E0217	Water circulating heat pad with pump	E0218	Water circulating cold pad with pump
ELCBED	HCPCS	E0265	Hospital bed, total electric (head, foot, and height adjustments), with any type side rails, with mattress	E0266	Hospital bed, total electric (head, foot, and height adjustments), with any type side rails, without mattress
NMSTIM	HCPCS	E0744	Neuromuscular stimulator for scoliosis	E0745	Neuromuscular stimulator, electronic shock unit
PROSTH	HCPCS	L5856	Addition to lower extremity prosthesis, endoskeletal knee-shin system, microprocessor control feature, swing and stance phase, includes electronic sensor(s), any type	L5858	Addition to lower extremity prosthesis, endoskeletal knee-shin system, microprocessor control feature, stance phase only, includes electronic sensor(s), any type

3.5.12 Service Types

Allows the site to define service types in the Services Window. This is to provide a logical grouping of Service Codes for reporting purposes.

Code	Description
BEHAV	Behavioral Health
DENTAL	Dental
DME	Durable Medical Equipment

Code	Description
HHC	Home Health Care
IP	Inpatient Services
MED	Medical
MEDCAR	Medical Care
OP	Outpatient Services
PSYCH	Psychiatric
RAD	Radiology
RHB	Rehabilitation
SUBABU	Substance Abuse
SURG	Surgical
TRANS	Transplant Services
EPSDT	EPSDT
NFAC	NFAC (Nursing Facility)
THPY	Therapy
WAV	Waiver
PHYS	Physician Services
CHIRO	Chiropractic

3.6 Case Management

3.6.1 Health Management Programs

Allows the user to configure information about the health management programs in which members are enrolled.

Code	Description	System Meaning	Alert Type	Deniable Information
IMPL	IMPACT PLUS ELIGIBILITY	Health Enhancement Program	Active Alert	Yes

3.6.2 New Case Responses

Reasons of Members' enrollment into new case management.

Code	Description	Member	Case Manager	PCP	Accepts Case	Declines Case
MTER	Meets Eligibility Requirements	N	Y	N	Y	N
DNME	Does Not Meet Eligibility Requirements	N	Y	N	N	Y

3.6.3 Issues

Allows the site to configure issues used in the Standard Care Plans Window and in the CM Module, Tab 3 – Issues.

Code	Description
IMPL	Impact Plus Eligibility

3.6.4 Contact Reasons-Case Management

Allows the user to configure information about the health management programs in which members are enrolled.

Code	Description	Catastrophic	Disease Management	Health Enhancement Program
CLOSUR	Disenrollment/Closure	Y	Y	Y
ENROLL	Enrollment	Y	Y	Y
FOLLOW	Follow-up Evaluation	Y	Y	Y

3.6.5 Outcomes – IMPACT Plus

Allows the user to list the possible reasons for discharge from IMPACT Plus.

Code	Description
MEMDC	Member Requested Discharge
PRORD	Provider Requested Discharge
LAPSES	60 days Lapse in Service
AGINAP	Age Inappropriate

3.7 Clients Supporting Tables

3.7.1 Client Types

Used on Tab 1 – Client Information

Code	Description
MCAID	Medicaid

3.8 Contact Management

3.8.1 Contact Attitudes

Allows the site to create codes and descriptions for recording a contact's attitude. These fields are hard-coded, and will not be used operationally.

Code	Description
ANGRY	Angry/ Frustrated
COOP	Cooperative
NCOOP	Non-Cooperative
SAT1	Not Satisfied at all
SAT2	Not Too Satisfied
SAT3	Satisfied
SAT4	Somewhat Satisfied
SAT5	Very Satisfied

3.8.2 Contact Issue Resolutions

Allows the user to assign a resolution to a closed issue.

Code	Description
REFAPP	Referred to Appeals
REFASA	Referred to Appropriate Service Area
REFCMG	Referred to Case Manager
REFMDR	Referred to Medical Director
REFTSS	Referred to Senior/Supervisor
REFDMS	Referred to DMS
REFEDS	Referred to EDS
REFBEN	Referred to DMS Member Services
REFCS	Referred to Customer Service

3.8.3 Contact Reasons (Contacts)

Allows the site to enter the reason for the contact.

Code	Description	Type of Note	Assessments	Care Coord. Center	Case Mgmt.	OB Info.	Provider Referrals
APPREC	Reconsideration	Reconsideration	N	Y	N	N	N
CLINQ	Claims Inquiry	Claims	N	Y	N	N	N
COMPL	Complaint	Member Services	N	Y	N	N	N
COMPLI	Compliment	Member Services	N	Y	N	N	N
OBNEW	OB Information	Contact	N	N	N	Y	N
OTHER	Other	Contact	N	Y	Y	Y	Y
CLNINF	Clinical	Clinical	N	Y	N	Y	N
BENEF	Benefits	Member Services	N	Y	Y	Y	Y
REFRL	Referral	All	N	Y	Y	N	N
CRTSY	Courtesy	Contact	N	Y	N	N	N
TAUREQ	Auth Request Initiation	Authorization Request	N	Y	N	N	N
AUTHRQ	Authorization Request	All	Y	N	N	Y	N
IMPACT	IMPACT Plus Eligibility	All	N	N	Y	N	N
PVDCOM	Provider Complaint	Complaint	N	Y	N	N	N
PVDCPL	Provider Compliment	All	N	Y	Y	N	N

3.8.4 Relationships

Allows the site to enter the caller's relationship to the member.

3.8.5 Note (Contact) Types

Allows the site to categorize the contact – these are configured as note types with a system meaning of Contact.

3.9 Managed Care Configuration

3.9.1 Managed Care Configuration (1)

Allows a site to define various validation and system wide configuration options.

Field Name	Field Description	Site Configuration Value
Application Name	Name of application	maxMC
Version	Reflects current software version	8.05
Owner	Organization Name	KyHealth Choices
Members Data Entry	Defines how maxMC should respond when a user enters in a member without a valid mailing address.	Required
Members Add/Update	Defines how maxMC should respond when a user is adding or updating a member without a valid mailing address.	Required
Members Letter Generation	Defines how maxMC should respond when a letter is being generated to a member without a valid mailing address.	Ask user
Providers Data Entry	Defines how maxMC should respond when a user enters in a provider without a valid mailing address.	Required
Providers Add/Update	Defines how maxMC should respond when a user is adding or updating a provider without a valid a mailing address.	Required
Providers Letter Generation	Defines how maxMC should respond when a letter is being generated to a provider without a valid mailing address.	Ask user
Allow Creation of Postal Code Records During Address Entry	Allows user with appropriate privileges to create new postal codes.	N
Diagnosis Age/Gender Validation	Defines how maxMC should respond when a user enters an ICD-9 code that does not correlate to a member's age and or gender.	Warn
Diagnosis Specificity Validation	Enforces the use of ICD-9 Diagnosis Codes to the highest degree of specificity.	Warn

Field Name	Field Description	Site Configuration Value
Procedure Specificity Validation	Enforces the use of Procedure Codes to the highest degree of specificity.	Warn
Enable CareEnhance Review Manager		Yes
Server URL	Enter the name of the server url where CERME resides	http://rm.shps.com.rm
Server	Enter the name of the server where DS Series resides.	<blank>
Database	Enter the DS Series database that the user will be accessing.	<blank>
Remote Host Name	Enter the remote host name of the DSSeries web server.	<blank>
Database Login		<blank>
Password		<blank>
Case Management Episodes	Journaling consists of documenting changes made to a record before and after it has been added, updated, or deleted	N
Authorizations	As Above	N
Services	As Above	N
Inpatient Information	As Above	N

3.9.2 Managed Care Configuration (2)

Allows a site to configure defaults for e-maxMC authorization status, note type options, and cost savings rates.

This functionality is not applicable at this time.

3.9.3 Managed Care Configuration (3)

Allows the site to configure options for maxMC Care Coordination and Appeals Processing.

Field Name	Field Description	Suggested Configuration Value	Site Configuration Value
Search for duplicate authorizations up to __ days in the past.	Defines how far back in the past maxMC will search for existing authorization records for a member.	180 Days	365
Criteria Notes Policy	Define the policy for how maxMC should use for updating a new criteria note.	Append/Update any existing criteria notes in review notes field	Append to existing review notes with criteria summary notes
Allow Creation of Member Records	If selected allows a user to add a member to the database.	Y	Y
Allow Creation of Provider Records	If selected allows a user to add a provider to the database.	Y	Y
Member Enrollment	Defines how maxMC is to respond when requested service dates do not correspond to the member's plan enrollment dates.	Warn	Warn
Group/Plan Display	Defines the policy for displaying group and plan information in a member record.	(None)	Plan Type
Require Member Plan	Define whether element is required when a user creates a new authorization or referral record.	N	Y
Required Diagnosis	As Above	N	Y
Require Case Type	As Above	N	Y
Require Event Classification	As Above	N	Y
Require Provider or Group/IPA	As Above	N	N
Require Determination Reason On All Services	As Above	N	Y

Field Name	Field Description	Suggested Configuration Value	Site Configuration Value
Require Level of Care On Inpatient Reviews	As Above	N	Y
Disallow Member Modification on Existing Records	As Above	N	Y
Disallow Plan Modification on Existing Records	As Above	N	Y
Allow Deletion of Previously Added Services	As Above	N	N
Allow Deletion of Previously Added Inpatient Details	As Above	N	N
Authorization Appeals	Defines How maxMC will process denied authorizations that are being appealed and appearance of the Appeals Tab in the Care Coordination Center.	Both	Structured
Care Coordination	Displays the Claims Details button that will open the Claims note field on the Care Coordination Window, Care Coordination tab. The button will also display in the Provider Referrals window and the Intake Processing window.	Y	Y
Services	Displays the Claims Details button that will open the Claims note field on the Care Coordination window Services tab. The button will also display in the Provider Referrals window and the Intake Processing window.	Y	Y

3.9.4 Managed Care Configuration (4)

Allows a site to define how authorization and service related numbers are created.

Field Name	Field Description	Suggested Configuration Value	Site Configuration Value
Authorization Reference Number-YES			
Enterable	Allows a user to manually enter in a number.	Y	N
Auto number	Sequential number assigned by maxMC.	Y	Y
Zero-Pad	Select if want maxMC to auto number using zero pad functionality, i.e. 00519866. If checked auto number must also be checked.	Y	Y
Authorization Auth #1-YES			
Visible	Select if want the Auth # 1 field to be visible.	Y	Y
Enterable		Y	N
Auto number		Y	N
Zero-pad		Y	N
Unique	Select if the number entered in the Auth #1 field cannot be identical to other authorization related numbers.	Y	N
Required for Approved Services	Select to indicate that the authorization number is required for approved services. If selected, Enterable and Auto number must be selected.	Y	N
Default From	Select if want any associated number to automatically appear in the Auth #1 field.	(None)	(None)

Field Name	Field Description	Suggested Configuration Value	Site Configuration Value
Existing Numbers Can Be Changed	Allows a user to change the authorization number after the record has been saved to the database.	N	N
Authorization Auth #2-NO			
Visible		Y	N
Enterable		Y	Y
Auto number		Y	N
Zero-pad		Y	N
Unique		Y	N
Required for Approved Services		Y	N
Default From		(None)	(None)
Existing Numbers Can Be Changed		N	N
Service Reference Number-YES			
Visible		Y	Y
Enterable		Y	N
Auto number		Y	Y
Zero-Pad		Y	Y
Unique		Y	Y
Required		Y	Y
Default From		Authorization Reference Number	Authorization Reference Number
Append Sequence		Y	Y
Separator	Character used to offset the defaulted reference number.	-	-

Field Name	Field Description	Suggested Configuration Value	Site Configuration Value
Existing Numbers Can Be Changed		N	N
Service Auth #1-YES			
Visible		Y	Y
Enterable		Y	N
Auto number		Y	N
Zero-Pad		Y	N
Unique		Y	Y
Required for Approved Services		Y	N
Default From		Authorization Auth #1	(None)
Append Sequence		Y	N
Separator		-	<blank>
Existing Numbers Can Be Changed		N	N
Service Auth #2 – NO			
Visible		Y	Y
Enterable		Y	N
Auto number		Y	N
Zero-Pad		Y	N
Unique		Y	N
Required for Approved Services		Y	N
Default From		Authorization Auth #2	(None)
Append Sequence		Y	N

Field Name	Field Description	Suggested Configuration Value	Site Configuration Value
Separator		-	<blank>
Existing Numbers Can Be Changed		N	N

3.9.5 Managed Care Configuration (5)

Allows a site to define how authorization and service related numbers are created.

Field Name	Field Description	Suggested Configuration Value	Site Configuration Value
Enable Client Subsystem	When selected enables client subsystem functionality.	N	Y
Enable Targeted Medical Management	When selected enables TMM functionality.	N	N
Display TMM Message to User	When selected enables TMM related pop up message windows to display when a new record is added to the database.	N	N
Client Subsystem Options			
Display Divisions by _____ in Member Information Window	Defines how divisions (client) will be displayed.	Description	Description
Enforcement Level for Client Services Not Purchased	Defines how maxMC should restrict access to member records or screens based upon client subsystem settings.	Ignore	Warn
Targeted Diagnosis Codes			
	Defines which diagnosis codes will be used for TMM Processing.	Use only Primary Diagnosis for TMM Processing	Use only Primary Diagnosis for TMM Processing
Resolving Multiple TMM Triggers			

Field Name	Field Description	Suggested Configuration Value	Site Configuration Value
Send Records for Manual Review When	Defines how maxMC should direct a record when manual review is required.	One or More TMM Triggers Indicate Manual Review	One or More TMM Triggers Indicate Manual Review
Target Length of Stay is Determined By	Defines how LOS should be assigned in TMM processing.	Maximum LOS From Highest Level TMM Entries	Maximum LOS From Highest Level TMM Entries
Send TMM Tasks According to	Defines how maxMC should send a task based upon TMM processing.	Highest Level TMM Entries	Highest Level TMM Entries

3.9.6 Managed Care Configuration (6)

Allows a site to define how data must be entered in the OB Information window.

Field Name	Field Description	Suggested Configuration Value	Site Configuration Value
Enable OB Indicator in Care Coordination	When selected causes the EDC field in the Care Coordination Center to display.	Y	Y
OB Episode Default Meaning	Can define a default meaning (Auth Request vs. Provider Referral) to auto populate the field in the OB Information window.	Authorization Request - Related	Authorization Request - Related
Enable OB data elements:			
Parity	If selected causes the Parity Field to display in the OB Information window.	Y	Y
Gravida	If selected causes the Gravida Field to display in the OB Information window.	Y	Y
LMP	If selected causes the LMP Field to display in the OB Information window.	Y	Y

Field Name	Field Description	Suggested Configuration Value	Site Configuration Value
Available units for birth weight:			
Pounds/Ounces	Determines how the birth weight is to be entered in the OB Information window.	Y	Y
Grams	As Above.	Y	Y
Available units of length:			
Inches	Determines how the birth length is to be entered in the OB Information window.	Y	Y
Centimeters	As Above.	Y	Y
Limit gestational age to __ weeks			
	Defines the maximum number of weeks allowed for entering in gestational age.	50	50
Show 10-minute Apgar Score			
Always	If selected indicated that the 10 minute Apgar score should always be entered.	Y	Y
When 5-Minute score is	If selected indicates that the 10 minute Apgar score field will display only when the 5 minute score is equal to or less than the configured value.	7 or less	N*

N is required value in order to display both 10 minute and 5 minute Apgar.

3.9.7 Managed Care Configuration (7)

Allows a site to configure storage and processing options for the member and provider records.

Field Name	Field Description	Suggested Configuration Value	Site Configuration Value
Member Options			
Pre-Existing Conditions Level	Defines how pre-existing conditions for a member will be handled.	Member	Member

Field Name	Field Description	Suggested Configuration Value	Site Configuration Value
Benefits Coordination Level	Defines how benefits coordination for a member will be handled.	Member	Member
Coverage Level	Defines how coverage levels for a member will be handled.	Member	Member
Use Member-Level Primary Care Providers	Select to allow users to assign providers directly to members on the Member Plan Group details Window	Y	N
Use "Member Information Outside maxMC" Flag	Is used to indicate in Member Information Window that the member has authorizations in another application.	N	N
Display Pop-Up Window for Member Alerts	Displays a Pop-Up Alert Message	Y	N – Use Widget
Include Alternate Identifiers in Member Matching	Allows users to search by primary and secondary identifiers		All ID Types
Include Past Dates			Y
Include Future Dates			Y
Provider Options			
Multiple Lines of Business per Affiliation	If selected allows multiple lines of business to be recorded for a provider on the 5th Tab in the Affiliations window.	N	N
Multiple Provider Networks per Affiliation	If selected allows for multiple networks to be recorded for a provider on the 5th Tab in the Affiliations window.	N	N
Include Mailing Address for Provider Affiliation Searches	If selected then the provider's mailing address will be included in the provider search.	Y	Y

Field Name	Field Description	Suggested Configuration Value	Site Configuration Value
Provider Validation			
Contract	Allows the user to search for provider affiliations for contract affiliations only. Provider validation options also apply.		Ignore
Network	Validation is satisfied when the member's network matches an active network assigned to a provider affiliation. Can be used with single-network and multiple-network affiliations	Warn	Ignore
Service Area	Validation is satisfied when the member's service area matches the service area assigned to a provider affiliation. Can be used with single-network and multiple-network affiliations.	Warn	Ignore
Line of Business	Validation is satisfied when the LOB on the payer plan from the member's coverage matches an active LOB for a provider affiliation. Can be used with single-network and multiple-network affiliations.	Warn	Ignore
Product	Health Plan Product validation is satisfied when the product on the member's payer plan matches the product assigned to a provider affiliation.	Warn	Ignore
Payer	Validation is satisfied when the payer on the member's payer plan matches the payer assigned to a provider affiliation.	Warn	Ignore

3.10 Member Information

3.10.1 Member Alert Types

Allows the site to define Alert Types for use on the Member Information Tab. Other member status codes can be defined as needed.

Code	Description
SPOUSE	Release of Information to Spouse
KHCDIR	KyHealth Choices Directives Apply
GUARDN	Guardianship Applies

3.10.2 Member Roles

Allows the site to indicate the role of the Member on the Member Information Window.

Code	Description	Policy Holder	System Meaning
18	Self	Yes	Self

3.10.3 States Provinces

Allows the user to list the states to be included in the member and provider interfaces.

Code	Description	Country	System Record
AL	Alabama	US	Y
AK	Alaska	US	Y
AS	American Samoa	AS	Y
AZ	Arizona	US	Y
AR	Arkansas	US	Y
CA	California	US	Y
CO	Colorado	US	Y
CT	Connecticut	US	Y
DE	Delaware	US	Y
DC	District of Columbia	US	Y
FM	Federated States of Micronesia	FM	Y
FL	Florida	US	Y
GA	Georgia	US	Y
GU	Guam	GU	Y
HI	Hawaii	US	Y
ID	Idaho	US	Y

Code	Description	Country	System Record
IL	Illinois	US	Y
IN	Indiana	US	Y
IA	Iowa	US	Y
KS	Kansas	US	Y
KY	Kentucky	US	Y
LA	Louisiana	US	Y
ME	Maine	US	Y
MH	Marshall Islands	MH	Y
MD	Maryland	US	Y
MA	Massachusetts	US	Y
MI	Michigan	US	Y
MN	Minnesota	US	Y
MS	Mississippi	US	Y
MO	Missouri	US	Y
MT	Montana	US	Y
NE	Nebraska	US	Y
NV	Nevada	US	Y
NH	New Hampshire	US	Y
NJ	New Jersey	US	Y
NM	New Mexico	US	Y
NY	New York	US	Y
NC	North Carolina	US	Y
ND	North Dakota	US	Y
MP	Northern Mariana Islands	MP	Y
OH	Ohio	US	Y
OK	Oklahoma	US	Y
OR	Oregon	US	Y
PA	Pennsylvania	US	Y

Code	Description	Country	System Record
PR	Puerto Rico (Territory)	PR	Y
RI	Rhode Island	US	Y
SC	South Carolina	US	Y
SD	South Dakota	US	Y
TN	Tennessee	US	Y
TX	Texas	US	Y
UT	Utah	US	Y
VT	Vermont	US	Y
VA	Virginia	US	Y
VI	Virgin Islands, U.S.	VI	Y
WA	Washington	US	Y
WV	West Virginia	US	Y
WI	Wisconsin	US	Y
WY	Wyoming	US	Y
AA	Armed Forces the Americas	US	Y
AE	Armed Forces Europe	US	Y
AP	Armed Forces Pacific	US	Y
PW	Palau	PW	Y
ZZ	Other Non US		Y

3.10.4 Counties

Allows the site to define the county a member or next of kin resides. County can be captured on the Member & Next of Kin screens.

Code	Description
001	ADAIR
002	ALLEN
003	ANDERSON
004	BALLARD

Code	Description
005	BARREN
006	BATH
007	BELL
008	BOONE
009	BOURBON
010	BOYD
011	BOYLE
012	BRACKEN
013	BREATHITT
014	BRECKINRIDGE
015	BULLITT
016	BUTLER
017	CALDWELL
018	CALLOWAY
019	CAMPBELL
020	CARLISLE
021	CARROLL
022	CARTER
023	CASEY
024	CHRISTIAN
025	CLARK
026	CLAY
027	CLINTON
028	CRITTENDEN
029	CUMBERLAND
030	DAVIESS
031	EDMONSON
032	ELLIOTT

Code	Description
033	ESTILL
034	FAYETTE
035	FLEMING
036	FLOYD
037	FRANKLIN
038	FULTON
039	GALLATIN
040	GARRARD
041	GRANT
042	GRAVES
043	GRAYSON
044	GREEN
045	GREENUP
046	HANCOCK
047	HARDIN
048	HARLAN
049	HARRISON
050	HART
051	HENDERSON
052	HENRY
053	HICKMAN
054	HOPKINS
055	JACKSON
056	JEFFERSON
057	JESSAMINE
058	JOHNSON
059	KENTON
060	KNOTT

Code	Description
061	KNOX
062	LARUE
063	LAUREL
064	LAWRENCE
065	LEE
066	LESLIE
067	LETCHER
068	LEWIS
069	LINCOLN
070	LIVINGSTON
071	LOGAN
072	LYON
073	MCCRACKEN
074	MCCREARY
075	MCLEAN
076	MADISON
077	MAGOFFIN
078	MARION
079	MARSHALL
080	MARTIN
081	MASON
082	MEADE
083	MENIFEE
084	MERCER
085	METCALFE
086	MONROE
087	MONTGOMERY
088	MORGAN

Code	Description
089	MUHLENBERG
090	NELSON
091	NICHOLAS
092	OHIO
093	OLDHAM
094	OWEN
095	OWSLEY
096	PENDLETON
097	PERRY
098	PIKE
099	POWELL
100	PULASKI
101	ROBERTSON
102	ROCKCASTLE
103	ROWAN
104	RUSSELL
105	SCOTT
106	SHELBY
107	SIMPSON
108	SPENCER
109	TAYLOR
110	TODD
111	TRIGG
112	TRIMBLE
113	UNION
114	WARREN
115	WASHINGTON
116	WAYNE

Code	Description
117	WEBSTER
118	WHITLEY
119	WOLFE
120	WOODFORD

3.10.5 Countries

Allows the site to define Countries of Birth for use on the Identification (Member) Tab.

Code	Description	System Record
AE	United Arab Emirates	Y
AD	Andorra	Y
AF	Afghanistan	Y
AG	Antigua And Barbuda	Y
AI	Anguilla	Y
AL	Albania	Y
AM	Armenia	Y
AN	Netherlands Antilles	Y
AO	Angola	Y
AQ	Antarctica	Y
AR	Argentina	Y
AS	American Samoa	Y
AT	Austria	Y
AU	Australia	Y
AW	Aruba	Y
AZ	Azerbaijan	Y
BA	Bosnia And Herzegovina	Y
BB	Barbados	Y
BD	Bangladesh	Y
BE	Belgium	Y

Code	Description	System Record
BF	Burkina Faso	Y
BG	Bulgaria	Y
BH	Bahrain	Y
BI	Burundi	Y
BJ	Benin	Y
BM	Bermuda	Y
BN	Brunei Darussalam	Y
BO	Bolivia	Y
BR	Brazil	Y
BS	Bahamas	Y
BT	Bhutan	Y
BV	Bouvet Island	Y
BW	Botswana	Y
BY	Belarus	Y
BZ	Belize	Y
CA	Canada	Y
CC	Cocos (Keeling) Islands	Y
CD	Congo, The Democratic Republic Of The	Y
CF	Central African Republic	Y
CG	Congo	Y
CH	Switzerland	Y
CI	Cote D'Ivoire	Y
CK	Cook Islands	Y
CL	Chile	Y
CM	Cameroon	Y
CN	China	Y
CO	Colombia	Y
CR	Costa Rica	Y

Code	Description	System Record
CU	Cuba	Y
CV	Cape Verde	Y
CX	Christmas Island	Y
CY	Cyprus	Y
CZ	Czech Republic	Y
DE	Germany	Y
DJ	Djibouti	Y
DK	Denmark	Y
DM	Dominica	Y
DO	Dominican Republic	Y
DZ	Algeria	Y
EC	Ecuador	Y
EE	Estonia	Y
EG	Egypt	Y
EH	Western Sahara	Y
ER	Eritrea	Y
ES	Spain	Y
ET	Ethiopia	Y
FI	Finland	Y
FJ	Fiji	Y
FK	Falkland Islands (Malvinas)	Y
FM	Micronesia, Federated States Of	Y
FO	Faroe Islands	Y
FR	France	Y
GA	Gabon	Y
GB	United Kingdom	Y
GD	Grenada	Y
GE	Georgia	Y

Code	Description	System Record
GF	French Guiana	Y
GH	Ghana	Y
GI	Gibraltar	Y
GL	Greenland	Y
GM	Gambia	Y
GN	Guinea	Y
GP	Guadeloupe	Y
GQ	Equatorial Guinea	Y
GR	Greece	Y
GS	South Georgia And The South Sandwich Islands	Y
GT	Guatemala	Y
GU	Guam	Y
GW	Guinea-Bissau	Y
GY	Guyana	Y
HK	Hong Kong	Y
HM	Heard Island And McDonald Islands	Y
HN	Honduras	Y
HR	Croatia	Y
HT	Haiti	Y
HU	Hungary	Y
ID	Indonesia	Y
IE	Ireland	Y
IL	Israel	Y
IN	India	Y
IO	British Indian Ocean Territory	Y
IQ	Iraq	Y
IR	Iran, Islamic Republic Of	Y

Code	Description	System Record
IS	Iceland	Y
IT	Italy	Y
JM	Jamaica	Y
JO	Jordan	Y
JP	Japan	Y
KE	Kenya	Y
KG	Kyrgyzstan	Y
KH	Cambodia	Y
KI	Kiribati	Y
KM	Comoros	Y
KN	Saint Kitts And Nevis	Y
KP	Korea, Democratic People's Republic Of	Y
KR	Korea, Republic Of	Y
KW	Kuwait	Y
KY	Cayman Islands	Y
KZ	Kazakhstan	Y
LA	Lao People's Democratic Republic	Y
LB	Lebanon	Y
LC	Saint Lucia	Y
LI	Liechtenstein	Y
LK	Sri Lanka	Y
LR	Liberia	Y
LS	Lesotho	Y
LT	Lithuania	Y
LU	Luxembourg	Y
LV	Latvia	Y
LY	Libyan Arab Jamahiriya	Y
MA	Morocco	Y

Code	Description	System Record
MC	Monaco	Y
MD	Moldova, Republic Of	Y
MG	Madagascar	Y
MH	Marshall Islands	Y
MK	Macedonia, The Former Yugoslav Republic	Y
ML	Mali	Y
MM	Myanmar	Y
MN	Mongolia	Y
MO	Macau	Y
MP	Northern Mariana Islands	Y
MQ	Martinique	Y
MR	Mauritania	Y
MS	Montserrat	Y
MT	Malta	Y
MU	Mauritius	Y
MV	Maldives	Y
MW	Malawi	Y
MX	Mexico	Y
MY	Malaysia	Y
MZ	Mozambique	Y
NA	Namibia	Y
NC	New Caledonia	Y
NE	Niger	Y
NF	Norfolk Island	Y
NG	Nigeria	Y
NI	Nicaragua	Y
NL	Netherlands	Y

Code	Description	System Record
NO	Norway	Y
NP	Nepal	Y
NR	Nauru	Y
NU	Niue	Y
NZ	New Zealand	Y
OM	Oman	Y
PA	Panama	Y
PE	Peru	Y
PF	French Polynesia	Y
PG	Papua New Guinea	Y
PH	Philippines	Y
PK	Pakistan	Y
PL	Poland	Y
PM	Saint Pierre And Miquelon	Y
PN	Pitcairn	Y
PR	Puerto Rico (Territory)	Y
PS	Palestinian Territory, Occupied	Y
PT	Portugal	Y
PW	Palau	Y
PY	Paraguay	Y
QA	Qatar	Y
RE	Reunion	Y
RO	Romania	Y
RU	Russian Federation	Y
RW	Rwanda	Y
SA	Saudi Arabia	Y
SB	Solomon Islands	Y
SC	Seychelles	Y

Code	Description	System Record
SD	Sudan	Y
SE	Sweden	Y
SG	Singapore	Y
SH	Saint Helena	Y
SI	Slovenia	Y
SJ	Svalbard And Jan Mayen	Y
SK	Slovakia	Y
SL	Sierra Leone	Y
SM	San Marino	Y
SN	Senegal	Y
SO	Somalia	Y
SR	Suriname	Y
ST	Sao Tome And Principe	Y
SV	El Salvador	Y
SY	Syrian Arab Republic	Y
SZ	Swaziland	Y
TC	Turks And Caicos Islands	Y
TD	Chad	Y
TF	French Southern Territories	Y
TG	Togo	Y
TH	Thailand	Y
TJ	Tajikistan	Y
TK	Tokelau	Y
TM	Turkmenistan	Y
TN	Tunisia	Y
TO	Tonga	Y
TP	East Timor	Y
TR	Turkey	Y

Code	Description	System Record
TT	Trinidad And Tobago	Y
TV	Tuvalu	Y
TW	Taiwan, Province Of China	Y
TZ	Tanzania, United Republic Of	Y
UA	Ukraine	Y
UG	Uganda	Y
UM	United States Minor Outlying Islands	Y
US	United States	Y
UY	Uruguay	Y
UZ	Uzbekistan	Y
VA	Holy See (Vatican City State)	Y
VC	Saint Vincent And The Grenadines	Y
VE	Venezuela	Y
VG	Virgin Islands, British	Y
VI	Virgin Islands, U.S.	Y
VN	Viet Nam	Y
VU	Vanuatu	Y
WF	Wallis And Futuna	Y
WS	Samoa	Y
YE	Yemen	Y
YT	Mayotte	Y
YU	Yugoslavia	Y
ZA	South Africa	Y
ZM	Zambia	Y
ZW	Zimbabwe	Y

3.10.6 Member ID Types

Allows the site to define unique member identifiers.

Code	Description	Modifier Required	Data Type	Minimum Length	Maximum Length
NQ	Member ID		Alphanumeric	1	30
Q4	Prior Identifier Number		Alphanumeric	1	30
SY	Social Security Number		Alphanumeric	1	30

3.10.7 Marital Status

Allows the site to define Marital Status for use on the Identification (Member) Tab

Code	Description	System Meaning
B	Registered Domestic Partner	Domestic Partner
D	Divorced	Divorced
I	Single	Single
M	Married	Married
R	Unreported	Unreported
S	Separated	Separated
U	Unmarried (Single or Divorced or Widowed)	Unmarried (Single or Divorced or Widowed)
W	Widowed	Widowed
X	Legally Separated	Legally Separated

3.10.8 Next of Kin Roles

Allows the site to define Next of Kin roles for use on the Next of Kin (Member) Tab.

Code	Description
PART	Parent
LEGR	Legal Guardian
POWA	Power of Attorney
EMCO	Emergency Contact
SPOU	Spouse
CHID	Child
AUCL	Aunt or Uncle

Code	Description
GRAN	Grandparent
BRSI	Brother or Sister
COUS	Cousin
LIFP	Life Partner
FOPR	Foster Parent
FRSP	Former Spouse

3.10.9 Plan Provider Type

Allows the site to define the type of provider associated to a member. Used on the Provider Details Tab on the Member Plan and Group Window.

Code	Description	System Meaning
PCP	PCP	Primary Care Provider
OBG	OB/GYN Provider	OB/GYN Provider
OTH	Other	Other
PED	Pediatrician	Primary Care Provider

3.10.10 Payer Plan Tiers

3.10.11 Disenrollment Reasons

Allows the site to define disenrollment reasons for use on the Member Plan & Group windows under the Details Tab.

Code	Description
INELIG	Ineligible for Healthcare Coverage
DECD	Subscriber Deceased

3.10.12 Module Buttons

- Care Coordination Center;
- Reporting and Analysis;
- System Management, and,
- Provider Credentialing.

3.10.12.1 Care Coordination Center

Menu Item (1st Level)	Menu Item (2nd Level)	Menu Item (3rd Level)
Utilization Management>>	Care Coordination Center	
	Intake Processing	
	Assignment of Care	
	Provider Referrals	
	Provider Cross-Coverage	
Case Management>>	Case Management	
	Member Care Plans	
	Standard Care Plans	
	Case Management Enrollment	
	Case Management Screening Tool	
	OB Information	
	RAND SF36 Health Survey	
Appeals>>	Expedited Appeals	
	Standard Appeals	
Contact Management		
Surveys>>	Member Surveys	
	Provider Surveys	
	Other Surveys	
	Survey Configuration>>	Survey Builder
		Survey Types
Managed Care Information>>	Appeal Configuration>>	Appeal Categories
		Appeal Extension Reasons
		Appeal Outcomes
		Appeal Types
		Appeal Override Reasons
		Appeals Reasons

Menu Item (1st Level)	Menu Item (2nd Level)	Menu Item (3rd Level)
		Appeal Relationships
		Appeals Document Button Access
		CHDR Decisions
		CHDR Rationales
		Contact Reasons - Appeals
		Criteria Assessment Reasons
	Authorization Information>>	Contact Reasons
		Authorization Profiles
		Authorization Status
		Case Types
		Determination Reasons
		Dispositions
		Event Classifications
		Inpatient Review Reasons
		Level of Care Reasons
		Levels of Care
		Outcome Reasons
		Outcomes
		Reasons for Override
		Reimbursement Types
		Review Criteria Sets
		Review Reasons
		Status Changes Reasons
		Targeted Medical Management

Menu Item (1st Level)	Menu Item (2nd Level)	Menu Item (3rd Level)
	Case Management Information>>	Case Management Goals
		Contact Reasons - Case Management
		Clinical Data Categories
		Clinical Data Items
		Clinical Data Reasons
		Clinical Data Routes
		Case Level Tool
		Issues
		Case Manager Rosters
		Health Management Programs
		High Tech Needs
		Interventions
		New Case Responses
	Client Information>>	Client Accounting IDs
		Client Divisions
		Client Information Categories
		Client Invoice Frequencies
		Client Invoice Reporting
		Client Invoice Types
		Client Services
		Client Types
		Clients
		Contact Entity Types

Menu Item (1st Level)	Menu Item (2nd Level)	Menu Item (3rd Level)
		General Ledger Accounts
		Invoice Fee Types
		Invoice Rollup IDs
		NAICS Categories
		Noncompliance Penalties
		Plan Governing Agencies
	Contact Information>>	Contact Attitudes
		Contact Issue Resolutions
		Contact Reasons
		Contact Types
	Diagnosis Information>>	DSM Axis IV
		DSM Axis V
		ICD-9-CM Diagnoses
		Site-Defined Diagnoses
		Treatment Diagnosis Groups
	Member Information>>	Care Classifications
		Contract Types
		Coverage Denial
		Coverage Termination
		Disabilities
		Drug Benefits
		Employee Types
		Employer Groups
		Leave of Absence
		Medicare Eligibility

Menu Item (1st Level)	Menu Item (2nd Level)	Menu Item (3rd Level)
		Member ID Modifiers
		Member ID Types
		Member Information
		Member Roles
		Pre-existing Waive Checks
		Psychiatric Status
	OB Information>>	Birth Statuses
		Detained Baby Dispositions
		Detained Baby Reasons
		Episode Meanings
		OB Outcomes
	Payers and Plans>>	Health Plan Products
		Payer Plan Attributes
		Payer Plan Deductibles
		Payer Plan Riders
		Payer Plan Tiers
		Payer Plan Types
		Payer Plans
		Payers
	Procedure Information>>	CPT Procedures
		HCPCS Procedures
		ICD-9-CM Procedures
		NDC Procedures
		NUBC Revenue Codes
		Site-Defined Procedures

Menu Item (1st Level)	Menu Item (2nd Level)	Menu Item (3rd Level)
		Treatment Procedure Groups
	Provider Information>>	Affiliation Types
		Affiliations
		Capitation Contract Types
		Integrated Delivery Networks
		Lines of Business
		Panels
		Participation Levels
		Patient Types
		Plan Provider Types
		Provider Change Reasons
		Provider Classifications
		Provider Groups
		Provider ID Modifiers
		Provider ID Types
		Provider Information
		Provider Networks
		Provider Roles
		Provider Types
		Restriction Reasons
		Termination Reasons
		User-Defined Licenses
	Service Information>>	Place of Service Profiles
		Places of Service
		Service Areas

Menu Item (1st Level)	Menu Item (2nd Level)	Menu Item (3rd Level)
		Service Restrictions
		Service Types
		Services
	Other Information>>	Address Book
		Alerts
		Assessment Types
		Assessments
		Care Activities
		Cost Savings Variance Reasons
		Delivery Priorities
		Disenrollment Reasons
		Document Types
		Hospital Treatment Services
		LOINC Codes
		Note Template Categories
		Note Templates
		Note Types
		Payment Status
		Payment Terms
		States / Provinces
		Units of Measure
		Web Notification Types
Criteria Information>>	Clinical Pathway Definitions	
	Clinical Pathway Previews	
	Criteria Builder>>	Criteria Pages
		Criteria Categories

Menu Item (1st Level)	Menu Item (2nd Level)	Menu Item (3rd Level)
	Criteria Set - Authorizations	
	Criteria Set - Case Management	
	InterQual CP-Imaging: Authorizations	
	InterQual CP-Imaging: Case Management	
	InterQual Care Planning: Authorizations	
	InterQual Care Planning: Case Management	
	InterQual Level of Care: Authorizations	
	InterQual Level of Care: Case Management	
	InterQual LOC-ORC: Authorizations	
	InterQual LOC-ORC: Case Management	
	Pathway Reviews - Authorizations	
	Pathway Reviews - Case Management	
	Review Based Evaluation - CM	
Privacy>>	Disclosures of Information	
	Member Access and Amendments	
	Member Consent Records	
	Member Privacy Requests	
Web Notification>>	Create Member Notifications	
	Create Provider Notifications	
	View Member Notifications	
	View Provider Notifications	

3.10.12.2 Reporting & Analysis

Menu Item (1st Level)	Menu Item (2nd Level)	Menu Item (3rd Level)
Reports>>	Database Queries	
	ezQ	
	Report Library Manager	

Menu Item (1st Level)	Menu Item (2nd Level)	Menu Item (3rd Level)
	Run Database Query	
	Run Reports	
	Window Report Access	
External Application Reports>>	Create/Edit External Application Reports	
Visual Reports>>	Visual Reports	
Dashboards & Gauges>>	Create / Edit Dashboards	
	Run Dashboards	
	Gauges	
Register Crystal Reports		
Reporting Configuration		
Printer Profiles		
Report Modifiers		
Report Signature Blocks		
Report Text Objects		
Summary Data>>	Run Summary Data Loads	
	Summary Data Loads	

3.10.12.3 System Management

Menu Item (1st Level)	Menu Item (2nd Level)	Menu Item (3rd Level)
Application Configuration>>	Managed Care Configuration	
	Menu Configuration	
	System Configuration	
	Window Access	
	Window Library	
Data Configuration>>	Clinical Coding Information>>	Diagnosis Related Groups
		DRG Multipliers
		DRG Grouping Logic

Menu Item (1st Level)	Menu Item (2nd Level)	Menu Item (3rd Level)
		Major Diagnostic Categories
	Clinical Pathway Information>>	Consequences of Variance
		Reasons For Variance
		User-Defined Associations
	Demographic Information>>	Allergies
		Allergy Severities
		Allergy Types
		Postal Codes
		Counties
		Countries
		Employment Status
		Ethnic Origins
		Job Classifications
		Marital Status
		Next Of Kin Roles
		Races
		Relationships
		Religions
		States / Provinces
	Privacy>>	Access Response Reasons
		Amendment Response Reasons
		Disclosure Requirement Reasons
		Extension Reasons
		Information Disclosure Purposes
		Member Alert Types

Menu Item (1st Level)	Menu Item (2nd Level)	Menu Item (3rd Level)
		Privacy Request Types
	Organization Information>>	Brokers
		Business Units
		Employers
		Organization Types
		Organization Contact Persons
		Payers
		Person Types
		Review Agencies
	Reporting Information>>	Letter Packages
		Database Queries
		Document Types
		Letter Modifiers
		Letter Types
		Printer Pools
		Printers
		Report Categories
		Report Field Configuration
		Report Types
	Staff Details Information>>	Cost Centers
		Emergency Locator Codes
		Departments
		Hospital Services
		Specialties
		Job Classifications
		Job Titles
		Staff Categories

Menu Item (1st Level)	Menu Item (2nd Level)	Menu Item (3rd Level)
		Visa Types
	Staff Information>>	Ancillary Staff Information
	Workgroup/Task Information>>	Workgroups
		Task List Redirection
		Task Distribution Lists
		Task Lists
		Task Priorities
		Task Types
Security>>	Retrieval Log	
	Activity Log Maintenance	
	User Information	
	Window Privilege Profiles	
	Security Profiles	
	Security User Information	
Job Definition & Scheduling>>	Application Event Queue	
	Job Definitions	
	Job Scheduling	
	Job Scripts	
	Schedule Monitor	
User-Defined Windows>>	Create/Edit User-Defined Windows	
	Run User-Defined Windows	
	User-Defined Tables	
Workgroup/Task Processing>>	Workgroup Task List Management	
	Task Batch Processing	
Xact>>	Data Records	
	Data Records Queue	

Menu Item (1st Level)	Menu Item (2nd Level)	Menu Item (3rd Level)
	Objects	
	System Applications	
	System Segments	
	System Tables	
	Translation Table	

3.11 Note Types All Modules

3.11.1 Assessment Notes (Criteria Care Coordination)

Allows the site to configure the “Note Types” with a System Meaning of “Criteria” (Care Coordination).

Description	System Meaning
Clinical	Assessment (Care Coordination)
Inquiry	Contact
Notification	Contact
Benefits	Contact
Eligibility	Contact
Claims	Contact
Appeal Inquiry	Contact
Letter	Contact
Rationale	Contact
Complaint	Contact
Management	Contact
Clinical	Contact
Courtesy Letter	Contact

3.11.2 Assessment Notes (Case Management)

Allows the site to configure the “Note Types” with a System Meaning of “Criteria” (Case Management).

Description	System Meaning
Clinical	Assessment (Case Management)
Inquiry	Contact
Notification	Contact
Benefits	Contact
Eligibility	Contact
Claims	Contact
Appeal Inquiry	Contact
Letter	Contact
Rationale	Contact
Complaint	Contact
Management	Contact
Clinical	Contact
Courtesy Letter	Contact

3.11.3 Assessment (Medical Administrative Review)

Allows the site to configure the “Note Types” with a System Meaning of “Criteria” (Medical Administrative Review).

Description	System Meaning
Clinical	Assessment (Medical Administrative Review)
Inquiry	Contact
Notification	Contact
Benefits	Contact
Eligibility	Contact
Claims	Contact
Appeal Inquiry	Contact
Letter	Contact
Rationale	Contact

Description	System Meaning
Complaint	Contact
Management	Contact
Clinical	Contact
Courtesy Letter	Contact

3.11.4 Assessments OB

Allows the site to configure the “Note Types” with a System Meaning of “Criteria” (Case Management).

Description	System Meaning
Clinical	Assessment (Case Management)
Inquiry	Contact
Notification	Contact
Benefits	Contact
Eligibility	Contact
Claims	Contact
Appeal Inquiry	Contact
Letter	Contact
Rationale	Contact
Complaint	Contact
Management	Contact
Clinical	Contact
Courtesy Letter	Contact

3.11.5 Case Management Issue

Allows the user to configure the “Note Types” for Case Management Issues

Description	System Meaning
Clinical	Case Management Issue

3.11.6 Case Management Program

Allows the site to configure the “Note Types” with a system meaning of “Program”

Description	System Meaning
Clinical	Case Management Program

3.11.7 Clinical Data

Allows the site to configure the “Note Types” with a system meaning of “Clinical Data”

Description	System Meaning
Clinical Data	Clinical Data

.

3.11.8 Contact

Allows the site to categorize the contact – these are configured as note types with a system meaning of Contact.

Description	System Meaning
Inquiry	Contact
Notification	Contact
Benefits	Contact
Eligibility	Contact
Claims	Contact
Appeal Inquiry	Contact
Letter	Contact
Rationale	Contact
Complaint	Contact
Management	Contact
Clinical	Contact
Courtesy Letter	Contact

3.11.9 OB Information

Allows the user to configure the “Note Types” to define information related to OB Case Management

Description	System Meaning
OB Information	OB Information

3.11.10 Reasons for Override

Allows the user to configure the Reasons for Override. Reasons for Override are used on Assessments.

Code	Description
ADMIND	Administrative Directive
NSJUD	Nursing Judgment

3.12 Obstetric Information

3.12.1 Birth Status

Allows the site to associate a code and description with the birth status of an infant. Additional status codes can be added as needed based on future requirements.

Code	Description	System Meaning
LIVE	Live Baby	live birth
STILL	Stillborn	still birth

3.12.2 Detained Baby Dispositions

Allows the site the ability to associate codes and descriptions with a detained baby's disposition type.

Code	Description
ADOPT	Adoption Agency
EXPIRE	Expired
FOSTER	Foster Care
HOME	Home
TRANS	Transfer

3.12.3 Detained Baby Reasons

Allows the site to associate a code and description with the reasons a baby is detained in the hospital. ***After further discussion with DMS it was determined that there is not a need to break down the definition of Complications. If a baby is detained, a new case is initiated***

with specific diagnosis information and InterQual determinations. This diagnosis information is more informative than a generalized breakdown would provide.

Code	Description
OBSERV	Held for Observation
PREM	Premature Birth
SOCIAL	Social Issues
CMPL	Complications
ABAN	Abandoned

3.12.4 Episode Meanings

Allows the site to define the types of events that occur during a member's pregnancy.

Code	Description	System Meaning
TAUREL	Authorization Request - Related	Authorization Request

3.12.5 OB Note Types

Allows the site to categorize the note – these are configured as note types with a system meaning of OB Information.

3.12.6 OB Outcomes

Allows the site to associate a code and description with the outcome of a member's pregnancy. Number of births can be captured in the note template.

Code	Description	System Meaning
CESSTL	C-Section Still Birth	pregnancy terminated abnormally
CESSUC	C-Section Live Birth	full-term delivery
MISCAR	Miscarriage	pregnancy terminated abnormally
MLTFUL	Multiple Birth Full Term	full-term delivery
MLTPRE	Multiple Birth Premature	premature delivery
CSPB	C-Section Premature Birth	premature delivery
VALB	Vaginal Live Birth	full-term delivery
VASB	Vaginal Still Birth	pregnancy terminated abnormally
VAPB	Vaginal Premature Birth	premature delivery
MUSB	Multiple Still Birth	pregnancy terminated abnormally

3.13 Payer Plans

3.13.1 Payer Plans

Allows a site to list all of their payer plans and associate a plan to a specific payer. This does not include Capitated plans that are not separate payers.

CODE	Description
GLCHO	Global Choice
OPTIM	Optimum
FAMCH	Family Choice
COMPR	Comprehensive
MCAID	Medicaid
MCARE	Medicare
MGCAR	Managed Care
OPTIM	Optimum
PMCAID	Pending Medicaid

3.13.2 Plan Types

Allows a site to define their list plan types.

Code	Description	System Meaning
AG	Preventative Care/Wellness	Preventative Care/Wellness
AH	24 Hour Care	24 Hour Care
AJ	Medicare Risk	Medicare Risk
AK	Mental Health	Mental Health
DCP	Dental Capitation	Dental Capitation
DEN	Dental	Dental
EPO	Exclusive Provider Organization	Exclusive Provider Organization
FAC	Facility	Facility
HE	Hearing	Hearing
HLT	Health-Includes hospital and professional coverage	Health-Includes hospital and professional coverage

Code	Description	System Meaning
HMO	Health Maintenance Organization	Health Maintenance Organization
LTC	Long-Term Care	Long-Term Care
LTD	Long-Term Disability	Long-Term Disability
MCAID	Medicaid	Major Medical
MM	Major Medical	Major Medical
MOD	Mail Order Drug	Mail Order Drug
PDG	Prescription Drug	Prescription Drug
POS	Point of Service	Point of Service
PPO	Preferred Provider Organization	Preferred Provider Organization
PRA	Practitioners	Practitioners
STD	Short-Term Disability	Short-Term Disability
UR	Utilization Review	Utilization Review
VIS	Vision	Vision

3.13.3 Care Classification

Allows a site to define care classifications. Other is a default for infrequent use. Additional definitions can be added in the future as warranted.

Code	Description	System Meaning
DENTAL	Dental	Dental
MED	Medical	Medical
OTHER	Other	Other
PHARM	Pharmacy	Pharmacy
VISION	Vision	Vision

3.14 Place of Service Profiles

3.14.1 Places of Service

Allows the site to define places of services – the setting in which services are performed. Additional configurations can be established if types of reviews change. The alpha places of service are not standard place of service indicators because they are meant to differentiate types of facilities.

Code	Description	System Meaning
11	Office	Office
12	Home	Home
14	Group Home	Group Home
15	Mobile Unit	Mobile Unit
20	Urgent Care Facility	Urgent Care Facility
21	Inpatient Hospital	Inpatient Hospital
22	Outpatient Hospital	Outpatient Hospital
24	Ambulatory Surgical Center	Ambulatory Surgical Center
32	Nursing Facility	Nursing Facility
53	Community Mental Health Center	Community Mental Health Center
55	Residential Substance Abuse Treatment Facility	Residential Substance Abuse Treatment Facility
56	Psychiatric Residential Treatment Center	Psychiatric Residential Treatment Center
57	Non-Residential Substance Abuse Treatment Facility	Non-Residential Substance Abuse Treatment Facility
61	Comprehensive Inpatient Rehabilitation Facility	Comprehensive Inpatient Rehabilitation Facility
62	Comprehensive Outpatient Rehabilitation Facility	Comprehensive Outpatient Rehabilitation Facility
71	Public Health Clinic	Public Health Clinic
72	Rural Health Clinic	Rural Health Clinic
OPCENT	Outpatient Center	Other (Unlisted) Facility
ADUCAR	Adult Day Care	Custodial Care Facility
EPSDTP	EDSDT	Other (Unlisted) Facility
FREPSY	Freestanding Psychiatric Facility	Inpatient Psychiatric Facility
IPRHAB	Inpatient Rehabilitation Facility	Comprehensive Inpatient Rehabilitation Facility
NFRPSY	Distinct Partial Units-Psychiatric	Inpatient Psychiatric Facility
OPRHAB	Outpatient Rehabilitation Facility	Comprehensive Outpatient Rehabilitation Facility

Code	Description	System Meaning
LTAC	LTAC	Nursing Facility

3.14.2 Standard Configuration - Services

Allows the user to define services that members can receive and those a provider can provide.

Description	System Meaning	Code	Description
Medical Care	Medical Care	IP	Inpatient Services
Surgical	Surgical	SURG	Surgical
Diagnostic x-ray	Diagnostic x-ray	RAD	Radiology
Chiropractic	Chiropractic	CHIRO	Chiropractic
Dental Care	Dental Care	DENTAL	Dental
Orthodontics	Orthodontics	DENTAL	Dental
Home Health Care	Home Health Care	HHC	Home Health Care
Maternity	Maternity	IP	Inpatient Services
Transplants	Transplants	TRANS	Transplant Services
Audiology Exam	Audiology Exam	OP	Outpatient Services
Psychiatric	Psychiatric	PSYCH	Psychiatric
Rehabilitation	Rehabilitation	RHB	Rehabilitation
Vision (Optometry)	Vision (Optometry)	OP	Outpatient Services
Physician Services	Consultation	PHYS	Physician Services
Therapy	Physical Medicine	THPY	Therapy
Nursing Facility	Skilled Nursing Care	NFAC	NFAC
NF-Swing	Skilled Nursing Care	NFAC	NFAC
NF-IMD	Skilled Nursing Care	NFAC	NFAC
NF-BI	Skilled Nursing Care	NFAC	NFAC
NF-ICFMRDD	Skilled Nursing Care	NFAC	NFAC
NF-BI Locked	Skilled Nursing Care	NFAC	NFAC

Description	System Meaning	Code	Description
NF-VENT	Skilled Nursing Care	NFAC	NFAC
HCB – SERVICES	Medical Care	WAV	Waiver
HCB – LOC	Medical Care	WAV	Waiver
Adult Day Care – LOC	Medical Care	WAV	Waiver
Adult Day Care – SERVICES	Medical Care	WAV	Waiver
Medical	Medical Care	OP	Outpatient Services
Model II - LOC	Medical Care	WAV	Waiver
Model II – SERVICES	Medical Care	WAV	Waiver
ABI - LOC	Medical Care	WAV	Waiver
ABI – SERVICES	Medical Care	WAV	Waiver
SCL - MED	Medical Care	WAV	Waiver
DME Purchase	Durable Medical Equipment Purchase	DME	Durable Medical Equipment
DME Rental	Durable Medical Equipment Rental	DME	Durable Medical Equipment
Private Duty Nursing	Medical Care	EPSDT	EPSDT

3.14.3 Service Type

Allows the site to define service types on the Services Window to provide a logical grouping for Service Codes for reporting purposes.

Code	Description
BEHAV	Behavioral Health
DENTAL	Dental
DME	Durable Medical Equipment
HHC	Home Health Care
IP	Inpatient Services

Code	Description
MED	Medical
MEDCAR	Medicare Care
OP	Outpatient Services
PSYCH	Psychiatric
RAD	Radiology
RHB	Rehabilitation
SUBABU	Substance Abuse
SURG	Surgical
TRANS	Transplant Services
EPSDT	EPSDT
NFAC	NFAC
THPY	Therapy
WAV	Waiver
PHYS	Physician Services
CHIRO	Chiropractic

3.14.4 Place of Service Profiles

Allows the site to define services that members can receive at specific places of service.

Code	Description	Description
11-1	Office	Medical Care
11-2	Office	Surgical
11-33	Office	Chiropractic
11-4	Office	Diagnostic X-Ray
11-71	Office	Audiology Exam
11-73	Office	Diagnostic Medical
11-MDSERV	Office	Physician Services
11-35	Office	Dental Care
11-38	Office	Orthodontics
11-THRPHY	Office	Therapy

Code	Description	Description
11-PSYCH	Office	Psychiatric
12-DMENU	Home	DME Purchase
12-DMERR	Home	DME Rental
12-42	Home	Home Health Care
12-HCBMED	Home	HCB – LOC
12-HCBSVC	Home	HCB – Services
12-MODMED	Home	Model II - LOC
12-MODSVC	Home	Model II – Services
12-ABIMED	Home	ABI – LOC
12-SCLMED	Home	SCL – LOC
12-74	Home	Private Duty Nursing
15-1	Mobile Unit	Medical Care
15-4	Mobile Unit	Diagnostic X-Ray
15-35	Mobile Unit	Dental Care
21-1	Inpatient Hospital	Medical Care
21-2	Inpatient Hospital	Surgical
21-69	Inpatient Hospital	Maternity
21-70	Inpatient Hospital	Transplants
21-A4	Inpatient Hospital	Psychiatric
22-1	Outpatient Hospital	Medical Care
22-2	Outpatient Hospital	Surgical
22-4	Outpatient Hospital	Diagnostic X-Ray
22-73	Outpatient Hospital	Diagnostic Medical
22-THRPHY	Outpatient Hospital	Therapy
21-A4	Outpatient Hospital	Psychiatric
22-A9	Outpatient Hospital	Rehabilitation
24-2	Ambulatory Surgical Center	Surgical
24-4	Ambulatory Surgical Center	Diagnostic X-Ray

Code	Description	Description
24-73	Ambulatory Surgical Center	Diagnostic Medical
32-NFSNC	Nursing Facility	Nursing Facility
32-NFSWG	Nursing Facility	NF-Swing
32-NFIMD	Nursing Facility	NF-IMD
32-NFBI	Nursing Facility	NF-BI
32-NFICF	Nursing Facility	NF-ICFMRDD
32-THRPHY	Nursing Facility	Therapy
32-NFVENT	Nursing Facility	NF-Vent
32-NFBIL	Nursing Facility	NF-BI Locked
NFRPSY-A4	NonFreestanding Psychiatric Facility	Psychiatric
FREPSY-A4	Freestanding Psychiatric Facility	Psychiatric
FREPSY-A1	Freestanding Psychiatric Facility	Substance Abuse
OPCENT-PSYCH	Outpatient Center	Psychiatric
OPCENT-THRPHY	Outpatient Center	Therapy
14-A4	Group Home	Psychiatric
20-1	Urgent Care Facility	Medical Care
20-2	Urgent Care Facility	Surgical
20-4	Urgent Care Facility	Diagnostic X-ray
20-73	Urgent Care Facility	Medical Care
20-71	Urgent Care Facility	Audiology Exam
23-86	Emergency Room – Hospital	Emergency Services
55-A1	Residential Substance Abuse Treatment Facility	Substance Abuse
56-BPHSY	Psychiatric Residential Treatment Center	Psychiatric

Code	Description	Description
57-A1	Non-Residential Substance Abuse Treatment Facility	Substance Abuse
71-THRPY	Public Health Clinic	Therapy
71-4	Public Health Clinic	Diagnostic X-ray
72-THRPHY	Rural Health Clinic	Therapy
72-4	Rural Health Clinic	Diagnostic X-ray
ADUCAR-ADDAYL	Adult Day Care	Adult Day Care - LOC
ADUCAR – ADDAYS	Adult Day Care	Adult Day Care - Services
ADUCAR-THRPHY	Adult Day Care	Therapy
LTAC-1	LTAC	Medical Care
IPRHAB-1	Inpatient Rehabilitation Facility	Medical Care
OPRHAB-1	Outpatient Rehabilitation Facility	Medical Care
OPRHAB-A9	Outpatient Rehabilitation Facility	Outpatient Rehabilitation Facility
NFRPSY-A4	Distinct Partial Units – Psychiatric	Psychiatric
EPSDTP-A4	EPSDT	Psychiatric
EPSDTP-35	EPSDT	Dental
EPSDTP-DMENU	EPSDT	DME Purchase
EPSDTP-DMERR	EPSDT	DME Rental
EPSDTP-42	EPSDT	Home Health Care
IPRHAB-A9	EPSDT	Rehabilitation

3.15 Letters and Reports

3.15.1 Delivery Priorities

Allows the site to define the mailing priorities in Care Coordination.

Code	Description
CERT	Certified Mail
COUR	Courier
FIRST	First Class
OND	Overnight Delivery
SECOND	Second Class
THIRD	Third Class
PRI	Priority Mail

3.15.2 Document Types

Allows the site to configure document types in Care Coordination.

Code	Description	System Meaning
APPREQ	Appeal Request	Letter
MRRECD	Medical Records Received	Letter
MRREQ	Request for Medical Records	Letter
RELINF	Release of Information	Letter
RECONR	Reconsideration Rights	Letter
ADMINR	Administrative Hearing Rights	Letter
CRTSY	Courtesy	Letter

3.15.3 Letter Types

Allows the site to configure letters that are processed.

Code	Description	System Meaning
CME	Case Management Enrollment	Case Management Enrollment
CMI	Case Management Issue	Case Management Issue
GEN	General	General
MAP	Member Appeal	Appeal

Code	Description	System Meaning
SYS	System Letter Type	General
TCM	Authorization Service	Authorization Service
TIR	Authorization Review	Authorization Review

3.15.4 Report Categories

Allows the site to associate one or more reports to functional areas or modules with the application.

Code	Description	Functional Area Code	Functional Area Description
OPS	Operations	MC	Care Coordination Center
		PC	Provider Credentialing
		RA	Reporting & Analysis
PERIOD	Periodic Reporting	RA	Reporting & Analysis
SYS	System Report Category	RA	Reporting & Analysis
SYSADM	System Administration	RA	Reporting & Analysis
		SM	System Management

3.15.5 Window Report Access

Allows the site to specify which reports are available from designated buttons provided in certain maxMC windows. The following reports are only available within the Reporting & Analysis module.

Code	Description
CM001S	Case Management Summary
SM010S	Interface Data Messages
UM001S	Cost Variance By Reviewer
UM002S	Denied Days By Member
UM003S	Denied Days By Reviewer
UM004S	Denied Services By Member
UM005S	Denied Services By Reviewer
UM006S	Frequent Flyers
UM007S	Frequent Flyers - Inpatient

Code	Description
UM008S	Inpatient Analysis
UM009S	Inpatient Census By Facility
UM010S	LOS Over Acceptable Length
UM011S	Authorization Requests by Service Type
UM020S	Denied Days by Facility
UM021S	Denied Services by Provider Type
UM022S	Denied Services by Provider
UM023S	Approved Days by Facility
UM024S	Approved Services by Provider Type
UM025S	Approved Services by Provider
OP001	Facility Activity
OP002	Medicaid Compliancy
OP003	Productivity Report
OP004	Ancillary Reviews Summary
OP005	Medicaid Referral
PA001	Prior Auth Report
Z00SM010S	Interface Data Messages

3.16 Site Defined Procedures

3.16.1 Site Codes

Allows the site to configure procedure codes not included in the HCPC, revenue or CPT code listing.

Dental – CDTs (Current Dental Terminology)

Code	Description
D0120	PERIODIC ORAL EVALUATION
D0140	LIMITED ORAL EXAM-PROBLEM FOCUSED
D0150	COMPREHENSIVE ORAL EVALUATION
D0170	RE-EVALUATION LIMITED PROBLEM

Code	Description
D0210	INTRAORAL-COMPLETE SERIES
D0240	INTRA ORAL X-RAY OCCLUSAL FILM
D0272	BITEWINGS-TWO FILMS
D0274	BITEWINGS-FOUR FILMS
D0330	PANORAMIC FILM
D0460	PULP VITALITY TEST
D0470	DIAGNOSTIC CAST
D1110	PROPHYLAXIS - ADULT
D1120	PROPHYLAXIS -CHILD
D1201	TOPICAL APPLICATION OF FLUORIDE (including prophylaxis) - child
D1203	TOPICAL APPLICATION OF FLUORIDE (prophylaxis not included) - child
D1351	SEALANT - PER TOOTH
D1510	SPACE MAINTAINER-FIXED - UNILATERAL
D1515	SPACE MAINTAINTER-FIXED - BILATERAL
D1520	SPACE MAINTAINTER-REMOVABLE - UNILATERAL
D1525	SPACE MAINTAINER-REMOVABLE - BILATERAL
D1550	RE-CEMENT SPACE MAINTAINER
D2331	RESIN - BASED COMPOSITE - TWO SURFACES ANTERIOR
D2390	RESIN - BASED COMPOSITE - CROWN, ANTERIOR
D2410	DENTAL GOLD FOIL ONE SURFACE
D2740	CROWN-PORCELAIN/CERAMIC SUBSTRATE
D2750	CROWN-PORCELAIN FUSED TO HIGH METAL NOBLE
D2751	CROWN - PORCELAIN FUSED TO PREDOMINANTLY BASED METAL
D2752	CROWN PORCELAIN FUSED TO NOBLE METAL
D2790	CROWN - FULL CAST BOLD NOBLE METAL
D2792	CROWN - FULL CAST NOBLE METAL

Code	Description
D2930	PRE-FAB STAINLESS STEEL CROWN-PRIMARY TOOTH
D2940	SEDATIVE FILLING
D2950	CORE BUILDUP, INCLUDING ANY PINS
D2952	CAST POST/CORE IN ADDITION TO CROWN
D2954	PRE-FAB POST & CORE IN ADDITION TO CROWN
D2962	LABIAL VENEER (PORCELAIN LAMINATE)-LABORATORY
D3120	PULP CAP- INDIRECT (EXCLUDING FINAL RESTORATION)
D3230	PULPAL THERAPY ANTERIOR PRIMARY TOOTH
D3240	PULPAL THERAPYPOSTERIOR PRIMARY TOOTH
D3310	Root Canal Therapy Anterior (Excluding Final Restoration).
D3346	RETREATMENT OF PREVIOUS ROOT CANAL THERAPY - ANTERIOR
D3347	RETREATMENT OF PREVIOUS ROOT CANAL THERAPY - BICUSPID
D3348	RETREATMENT OF PREVIOUS ROOT CANAL THERAPY - MOLAR
D3351	APEXIFICATION/RECALCIFICATION - INITIAL VISIT
D3352	APEXIFICATION/RECALCIFICATION - INTERIM MEDICATION REPLACEMENT VISIT
D3353	APEXIFICATION/RECALCIFICATION - FINAL VISIT
D3999	UNSPECIFIED ENDODONTIC PRECEDURE, BY REPORT
D4249	CLINICAL CROWN LENGTHENING-HARD TISSUE
D4271	SOFT TISSUE GRAFT PROCEDURE (INCLUDING DONOR SITE SURGERY)
D4321	PROVISIONAL SPLINTING - EXTRACORONAL
D4355	FULL MOUTH DEBRIDEMENT
D4381	LOCALIZED DELIVERY OF CHEMOTHERAPEUTIC AGENTS VIA CONTROLLED RELEASE VEHICLE INTO DISEASED CREVICULAR TISSUE, PER TOOTH
D4910	PERIODONTAL MAINTENANCE
D5110	COMPLETE DENTURE - MAXILLARY

Code	Description
D5120	COMPLETE DENTURE - MANDIBULAR
D5130	IMMEDIATE DENTURE - MAXILLARY
D5140	IMMEDIATE DENTURE - MANDIBULAR
D5211	MAXILLARY PARTIAL DENTURE - RESIN BASE
D5212	MANDIBULAR PARTIAL DENTURE - RESIN BASE
D5213	MAXILLARY PARTIAL DENTURE - Cast Metal framework with resin denture bases
D5214	MANDIBULAR PARTIAL DENTURE - Cast Metal framework with resin denture bases
D5820	INTERIM PARTIAL DENTURE (MAXILLARY)
D5821	INTERIM PARTIAL DENTURE (MANDIBULAR)
D5860	OVERDENTURE - COMPLETE BY REPORT
D5899	UNSPECIFIED REMOVABLE PROSTHODONTIC
D5951	FEEDING AID
D5999	UNSPECIFIED MAXILLOFACIAL PROSTHESIS BY REPORT
D6010	SURGICAL PLACEMENT OF IMPLANT (INDOSTEAD IMPLANTS
D6056	PREFABRICATED ABUTMENT
D6058	ABUTMENT SUPPORTED PORCELAIN/CERAMIC
D6060	ABUTMENT SUPPORTED PORCELAIN fused to Metal Crown
D6065	IMPLANT SUPPORTED PORCELAIN/CERAMIC CROWN
D6212	PONTIC -CAST NOBLE METAL
D6240	PONTIC-PORCELIN FUSED TO HIGH NOBLE METAL
D6241	PONTIC-PORCELAIN FUSED TO PREDOMINANTLY BASE METAL
D6242	PONTIC-PORCELAIN FUSED TO NOBLE METAL
D6545	RETAINER - CAST METAL FOR RESIN BONDED FIXED PROSTHESIS
D6750	CROWN PORCELAIN FUSED TO HIGH NOBLE METAL
D6751	CROWN - PORCELAIN FUSED TO PREDOMINANTLY BASE METAL

Code	Description
D6752	CROWN - PORCELAIN FUSED TO noble METAL
D6792	CROWN FULL CAST NOBLE METAL
D6793	PROVISIONAL RETAINER CROWN
D6970	CAST POST& CORE /BRG
D7270	TOOTH REIMPLANTATION and/or stabilization of displaced tooth
D7473	REMOVAL OF TORUS MANDIBULARS
D7880	OCCLUSAL ORTHOTIC DEVICE, BY REPORT
D8020	LIMITED ORTHODONTIC TREATMENT OF THE TRANSITIONAL DENTITION
D8030	LIMITED ORTHODONTIC TREATMENT OF THE ADOLESCENT DENTITION
D8060	INTERCEPTIVE ORTHODONTIC TREATMENT OF THE TRANSITIONAL DENTITION
D8210	REMOVABLE APPLIANCE THERAPY
D8220	FIXED APPLIANCE THERAPY (INCLUDE ADJUSTMENTS)
D8690	ORTHODONTIC TREATMENT (Alternative billing to a contract fee)
D8692	REPLACEMENT OF LOST OR BROKEN RETAINER
D9230	ANALGESIA, ANXIOLYSIS, INHALATION OF NITROUS OXIDE
D9241	INTRAVENOUS CONSCIOUS SEDATION/ANALGESIA - FIRST 30 MINUTES
D9242	INTRAVENOUS CONSCIOUS SEDATION/ANALGESIA - EACH ADD. 15 MINUTES
D9248	NON-INTRAVENOUS CONSCIOUS SEDATION
D9440	OFFICE VISIT - AFTER REGULARLY SCHEDULED HOURS
D9610	THERAPEUTIC DRUG INJECTION, BY REPORT
D9630	OTHER DRUGS AND/OR MEDICAMENTS, BY REPORT
D9920	BEHAVIOR MANAGEMENT, BY REPORT
D9940	OCCLUSAL GUARD, BY REPORT

3.17 System Configuration

3.17.1 System Configuration Settings

Allows the site the ability to define settings in maxMC that affect all modules.

Field Name	Field Description	Suggested Configuration Value	Site Configuration Value
Application Name	MaxMC	SHPS IS Configures with Client IS Staff	maxMC
Version	8.0		8.05
Key	The site is required to obtain a valid version key from the SHPS Support Site.		
Owner Code	SYS		KYMC
Owner Description	Site-Specific		KyHealth Choices
Serial Number	Site-specific-, assigned by Implementation.		
Number of Licensed Workstations	Site-specific- assigned by Implementation.		500
Unsaved Changes Message Version	When users attempt to exit a window without first adding or updating the record, the following message will appear: "Do you want to lose the changes just made?" By default, the Yes button will be selected--assuming that users will not want to save the changes prior to exiting.	Standard	Standard (Yes/No/Cancel)
User Authentication	Has been enhanced to allow external authentication for users.	Internal	Internal
Database Information			
Database Name	Site-specific- the database name which appears in the Help>> About window, for users to view the database that they're connected to production or training (for example).	SHPS IS Configures with Client IS Staff	KyHealth Choices

Field Name	Field Description	Suggested Configuration Value	Site Configuration Value
Database Date Format	The date format used in the Oracle Database.	"MM/DD/YYYY'	"MM/DD/YYYY'
Application Date Format	The date format used in the application.	"MM/DD/YYYY'	"MM/DD/YYYY'
Date Display Type	Site can customize how dates appear throughout the program, combining settings to achieve the desired appearance.	IS Configured	Custom Internal Date
Month/Day/Year Separator	A dash will be used to separate months, days, and years.	Dash	Forward Slash
Month Display Type		Character Abbreviation	Numeric
Display Leading Zeroes			Y
Days		Y	Y
Months		Y	Y
Past Null Date	This value will be used as the past null date in computation	01/01/1800	01/01/1800
Future Null Date	This value will be used as the future null date in computation.	12/31/2099	12/31/2099
Name Format		Upper Case	Upper Case
Address Format	Both uppercase and lowercase format will be accepted in the database.	No Formatting	Upper Case
Character Wildcard	The asterisk will be used to represent a single character.	?	*
String Wildcard	The asterisk will be used to represent multiple characters.	*	*
JCS Information			
JCS Server Address	Site-specific- server address where the JCS resides.	IS Configured	IS Configured
JCS Port Number	Site-specific.	IS Configured	IS Configured

Field Name	Field Description	Suggested Configuration Value	Site Configuration Value
JCS Retries		0	0
JSC Timeout		45	45

3.17.2 System Configuration Rules

Allows the site the ability to define Rules and Restrictions.

Based on current timeout for CareReview and validated by work processes

Field Name	Field Description	Suggested Configuration Value	Site Configuration Value
Maximum Items Retrieved For Lists	Regardless of a user's profile, they will be unable to retrieve more records (using Browse, Match, or List) than the number of records defined here.	999	999
Notification of Successfully Sent Tasks	Users will be automatically notified with a confirmation message when their tasks are successfully sent.	Y	Y
Maximum Minutes Before Timeout	Regardless of a user's profile, they will be unable to define a timeout profile greater than the timeframe defined here.	10	120*
Track Window Usage	The Track Window Usage check box will be enabled in future versions. Selecting or clearing the check box will not affect functionality.	N	N
Show Tasks Due Within __ Days by Default	The system default setting for how tasks should be displayed.		3
Maximum Number of Concurrent Connections (Use zero for unlimited)	System wide default for the number of maxMC sessions that a user can have opened concurrently.	3	0
Spell Check Configuration			

Field Name	Field Description	Suggested Configuration Value	Site Configuration Value
Minimum Length	The minimum number of characters users must have in their passwords.	3	six alphanumeric total with at least one number
Maximum Length	The maximum number of characters users must have in their passwords.	10	10
Alpha Characters	Letters are not required in the password.	(None)	Required
Numeric Characters	Numbers are not required in the password.	(None)	Required
Other Characters	Non-alphanumeric characters are not required in the password.	(None)	Invalid
Spell Check Configuration			
Path to Main Dictionaries	Site-Defined- Path to main dictionaries for the Spell Checker.		
Main Dictionary Files	Site-Defined- Names of the dictionaries for the Spell Checker.		
Session View Name	This configuration allows other users only to view records locked by the current user.	IS Configured	
External Customization Program			

3.18 Targeted Medical Management

3.18.1 Targeted Medical Management

Allows the site to configure the code & description used to classify the TMM list.

Priority	Item
1	Requested Provider
2	Procedure

Priority	Item
3	Diagnosis
4	Service
5	Requesting Provider

Default Options (IP)	Automated	Manual
Authorization Status	(None)	Pended
Status Reason	(None)	Critical Access Hospital
Inpatient Review Reason	(None)	
Default LOS Source	(None)	(None)

Default Options (OP)	Automated	Manual
Authorization Status	(None)	Pended
Status Reason	(None)	Critical Access Hospital
Default LOS Source	(None)	(None)

3.18.2 Requested Providers

Allows the site to configure requesting providers for automated or manual processing.

Provider Name	Inpatient Review	Send Task
Critical Access Facilities	Manual	Y
Bluegrass Community	Manual	Y
Breckenridge Memorial Hospital	Manual	Y
Caldwell County Hospital	Manual	Y
Carroll County Memorial Hosp	Manual	Y
Casey County Mem	Manual	Y
Caverna Memorial Hospital	Manual	Y
Cumberland County Hospital	Manual	Y

Provider Name	Inpatient Review	Send Task
Fort Logan Hospital	Manual	Y
Garrard County Hospital	Manual	Y
James B Haggin	Manual	Y
Jane Todd Crawford Hospital	Manual	Y
Jenkins Community Hospital	Manual	Y
Livingston County Hospital	Manual	Y
Marcum & Wallace	Manual	Y
Mary Breckenridge	Manual	Y
Morgan Co ARH	Manual	Y
New Horizons Medical Center	Manual	Y
Nicholas County	Manual	Y
Ohio County Hospital	Manual	Y
Our Lady of the Way	Manual	Y
St Elizabeth-Grant Co Hosp	Manual	Y
The Medical Center-Scottsville	Manual	Y
The Medical Center-Franklin	Manual	Y
Trigg County Hospital	Manual	Y
Union Co Methodist	Manual	Y
Wayne Co Hospital	Manual	Y
Knox County	Manual	Y
Marshall County	Manual	Y
Berea	Manual	Y
McDowell ARH	Manual	Y
Russell County	Manual	Y

3.19 Task Lists

3.19.1 Workgroup Users

Code	Workgroup	Task List
PSYCH	Psychiatric	EPSDT Psychiatric Task List
PSYCH	Psychiatric	Acute Freestanding Task List
	Psychiatric	Acute Non Freestanding Task List
	Psychiatric	PRTF Task List
	Psychiatric	Retro Psych Task List
	Psychiatric	LOI Psych Task List
LTC	Long Term Care	Phone LTC Task List
	Long Term Care	Fax LTC Task List
INPT	Inpatient Medical	OB In Pt Task List
	Inpatient Medical	Retro In Pt Task List
	Inpatient Medical	Phone In Pt Task List
	Inpatient Medical	Fax In Pt Task List
	Inpatient Medical	Nurse In Pt Task List
PHYS	Physician Services	Nurse Physician Services Task List
	Physician Services	Recon Physician Services Task List
	Physician Services	Fax Physician Services Task List
	DME	CAS DME Task List
	DME	Nurse DME Task List
DME	DME	LOI DME Task List
HH	Home Health	Phone Home Health Task List
	Home Health	Fax Home Health Task List
	Home Health	Retro Home Health Task List
MPL	Medical Panel Liaison	PCO Med Panel Liaison Task List
	Medical Panel Liaison	Admin Hearing Med Panel Liaison Task List
	Medical Panel Liaison	Recon Med Panel Liaison Task List
	Medical Panel Liaison	Referral Med Panel Liaison Task List

Code	Workgroup	Task List
DENTAL	Dental	EPSDT Dental Task List
	Dental	Traditional Dental Task List
	Dental	Orthodontics Dental Task List
CHIRO	Chiro	LOI Chiro Task List
	Chiro	Referral Outside Chiro Task List
	Chiro	Recon Chiro Task List
	Chiro	Nurse Chiro Task List
EPSDTS	EPSDT SS	LOI EPSDT SS Task List
	EPSDT SS	Fax EPSDT SS Task List
	EPSDT SS	Retro EPSDT SS Task List
WAIVER	Waiver Services	Waiver Services Task List
HOSPIC	Hospice	Hospice Task List
FLDREV	Field Review	Ancillary Field Review Task List
	Field Review	LOC Field Review Task List
	Imaging	LOI Imaging Task List
	Imaging	NURSE Imaging Task List
OPAUD	Outpatient Audiology	Audiology Task List
OPTHX	Outpatient Therapies	LOI Outpt Therapies Task List
	Outpatient Therapies	NURSE Outpt Therapies Task List
	Behavioral Health	Impact Plus Eligibility Task List
	Behavioral Health	Impact Plus Services Task List
BH	Behavioral Health	Crisis Stabilization Unit Task List
MEDDIR	Medical Director	Medical Director1 Task List
QM	Quality Management	Quality Management Task List
PHREV	Physician Review	Physician Reviewer One Task List
	Physician Review	Physician Reviewer Two Task List
	Physician Review	External Consultant Task List
	Leadership	Leadership Task List

3.20 Task Related Tables

3.20.1 Task Priorities

Allows the site to create custom priorities for their tasks. Each case requires a task assignment. If tasked to a physician or the review required short turnaround time, the code would be high. Low tasks would be assigned to a Lack of Information case with a longer response time that doesn't require immediate attention. Medium tasks would be everything in-between.

Code	Description	Priority
HIGH	High - If tasked to a physician or the review required short turnaround time	1
MED	Medium – Everything not meeting High or Low	2
LOW	Low - Lack of Information case with a longer response time	3

3.20.2 Task Lists

Allows the site to create Task Lists.

Code	Workgroup	Task List
PSYCH	Psychiatric	Psychiatric Task List
	Psychiatric	LOI Psych Task List
LTC	Long Term Care	LTC Task List
ACUTE	Inpatient Medical	Acute Task List
PHYS	Physician Services	Physician Services Task List
DME	DME	CAS DME Task List
	DME	Nurse DME Task List
	DME	LOI DME Task List
HH	Home Health	Phone Home Health Task List
	Home Health	Fax Home Health Task List
	Home Health	Retro Home Health Task List
MPL	Medical Panel Liaison	Med Panel Liaison Task List
DEN	Dental	EPSDT Dental Task List
	Dental	Traditional Dental Task List
	Dental	Orthodontics Dental Task List
CHIRO	Chiro	LOI Chiro Task List

Code	Workgroup	Task List
	Chiro	External Chiro Task List
	Chiro	Chiro Task List
EPSDT	EPSDT SS	LOI EPSDT SS Task List
	EPSDT SS	Fax EPSDT SS Task List
	EPSDT SS	Retro EPSDT SS Task List
WAIV	Waiver Services	Waiver Services Task List
HOSPC	Hospice	Hospice Task List
FLDREV	Field Review	Ancillary Field Review Task List
	Field Review	LOC Field Review Task List
OUTPT	Imaging	LOI Imaging Task List
	Imaging	Imaging Task List
	Outpatient Audiology	LOI Audiology Task List
	Outpatient Audiology	Audiology Task List
	Outpatient Therapies	LOI Outpt Therapies Task List
	Outpatient Therapies	Outpt Therapies Task List
BEHAV	Behavioral Health	Impact Plus Task List
MEDDIR	Medical Director	Medical Director Task List
QM	Quality Management	Quality Management Task List
PHREV	Physician Review	Dr Henderson Task List
	Physician Review	Dr Kimbler Task List
LEADER	Leadership	Leadership Task List

3.21 Task Types

In the Tasks window, you can organize, monitor, reassign, print, and perform tasks assigned to the current user. It is accessed by choosing the Tasks button located on the Toolbar.

3.21.1 Task Types

Allows the site to configure the Task Types.

A task is designed to provide users with preliminary and critical information about an action they have been assigned to handle. The task either directs a user to a window to work with an

existing record from the database, or has sufficient information available from the task itself to add a record to the database.

Code	Type	Description	Target Window	Default Task Recipient	Allow Changes to "Date/Time Due" on Existing Tasks
CONTAC	Window	Contact Management	CON001 Contact Management	Workgroup	N
SVYMEM	Window	Survey (Member)	SRP001 Survey (Member)	Workgroup	N
AUTH	Window	Authorization	TAU001 Care Coordination	Workgroup	N
MD REV	Window	Medical/Administrative Review	TAU001 Care Coordination	Workgroup	N
STD APP	Window	Standard Appeal	MAP102 Standard Appeals	Workgroup	N

3.21.2 Parameters

Parameters indicate which values should be stored in the task and which values from target window fields should be inserted in the task when the task is performed. These fields also appear in the task's description so the user knows the purpose of the task.

		Window Field	Filled By	Required
APPSTD	Standard Appeal	Member ID	Member ID	Y
		Appeal Start Date	Appeal Date	Y
		Appeal Time	Appeal Time	Y
CONTAC	Contact Management	Contact Unique Identifier	Contact Unique Identifier	Y
		Contact Name	Contact Name	Y
		Contact Method	Contact Method	Y
		Contact Date	Contact Date	Y
		Contact Time	Contact Time	Y
OBI	OB Information	Member ID	Member ID	Y

		Window Field	Filled By	Required
		EDC	EDC	Y
SVYMEM	Survey (Member)	Member ID	Member ID	Y
		Survey ID	Survey ID	Y
		Date Initiated	Date Initiated	Y
AUTH	Authorization	Place of Service	Place of Service	Y
		First Provider		N
		First Facility		N
		Escalation Level		N
		Appeal Type		N
		Appeal Date		N
		Appeal Time		N
MD REV	Medical/Administrative Review	Place of Service	Place of Service	N
		First Provider		N
		First Facility		N
		Escalation Level	Escalation Level	Y
		Appeal Type		N
		Appeal Date		N
		Appeal Time		N

3.21.3 Label Definition

		Label Item	Line	Starting At	Length
APPSTD	Standard Appeal	Member ID	1	1	25
		Space	1	26	1
		Member Formatted Name	1	27	50
		Carriage Return	1	77	
		Text	2	1	10

		Label Item	Line	Starting At	Length
		Appeal Date	2	12	13
		Appeal Time	2	25	5
CONTAC	Contact Management	Contact Name	1	1	50
		Space	1	51	5
		Contact Method	1	56	9
		Carriage Return	1	65	
		Contact Date	2	1	15
		Contact Time	2	16	5
CSMGMT	Case Management	Member Formatted Name	1	1	20
		Space	1	21	1
		Member ID	1	22	20
OBI	OB Information	Member Formatted Name	1	1	25
		Space	1	26	1
		Member ID	1	27	25
		Carriage Return	1	52	
		Current Date	2	1	11
SVYMEM	Survey (Member)	Member Formatted Name	1	1	50
		Space	1	51	1
		Member ID	1	52	25
		Space	1	77	1
		Date Initiated	1	78	11
		Carriage Return	1	89	
		Survey Title	2	1	60
AUTH	Authorization	Space	1	42	1
		Reference Number	1	43	25

		Label Item	Line	Starting At	Length
		Carriage Return	1	68	
		Date Initiated	2	1	11
		Space	2	12	1
		Place of Service	2	13	50
MD REV	Medical/Administrative Review	Space	1	42	1
		Reference Number	1	43	25
		Carriage Return	1	68	
		Date Initiated	2	1	11
		Space	2	12	1
		Place of Service	2	13	50

3.22 User Information

3.22.1 User Information

Allows the site to configure users' passwords and system options in maxMC.

STAFF ID	JCS	SYS	WEB	XACT
Staff Name	JCS User	System Record	Web User	XACT USER
USER PROFILE ID	JCS	SYS	WEB	XACT
APP LOGIN NAME	JCS	LANDA		
APP PASSWORD	********	********	********	********
DB LOGIN NAME	MC700_GOLD	MC700_GOLD	MC700_GOLD	MC700_GOLD
DB PASSWORD	********	********	********	********
ALLOW WILDCARD MATCHES	Y	Y		
SHOW INACTIVE RECORDS	Y	Y		
SOUNDEX NAME SEARCHES	Y	N		

STAFF ID	JCS	SYS	WEB	XACT
USER DEFAULTS	Y	Y		
SHOW TOOL BAR	Y	Y		
SHOW TOOL BAR TEXT	Y	Y		
SHOW CONTROL CENTER	Y	Y		
SAVE SETTINGS ON EXIT	Y	N		
VIEW VIP PATIENTS	Y	Y		
VIEW EMP PATIENTS	Y	Y		
VIEW RESTRICTED PATIENTS	Y	Y		
VIEW STAFF VERIFICATION	Y	Y	Y	Y
TOOL BAR POSITION		Top		

3.22.2 Account Restrictions

Restrict Users' profiles by establishing password and inactivity/time-out requirements.

STAFF ID	
Staff Name	This is valid for all Users
PASSWORD CHARACTERS	six alphanumeric and one must be a number
TIMEOUT	120*
REFRESH TASK LIST	Every three minutes
DISABLE ACCOUNT ON	Termination
FORCE PASS-WORD CHANGE (Days)	30
ALLOW GRACE LOGINS	5
Maximum Number of Concurrent Connections (Use zero for unlimited)	0
MONDAY SCHEDULED (HOURS)	Y

STAFF ID	
TUESDAY SCHEDULED (HOURS)	Y
WEDNESDAY SCHEDULED (HOURS)	Y
THURSDAY SCHEDULED (HOURS)	Y
FRIDAY SCHEDULED (HOURS)	Y
SATURDAY SCHEDULED (HOURS)	Y
SUNDAY SCHEDULED (HOURS)	Y

Based on current timeout for CareReview and validated by work processes

3.23 Window Privilege Profiles

The following sections display the forms that the maxMC system administrator can utilize to create security profiles to easily set up new users within the system. For the window privilege profiles created to support *KyHealth Choices*, see Appendix A.

- User Information Tab – Configure users' passwords and system options in maxMC;
- Account Restrictions Tab – Configure the when and how users can access maxMC;
- Privileges/Programs Tab – Configure the privilege profiles and third-party programs users can use with maxMC; and,
- Client Security Tab - Configure the client security available to users.

3.23.1 Window Access

Menu Level	Window	Subwindow	Window Code	View	Add	Update
2	Care Coordination		TAU001			
		Services	TAU001B			
		Inpatient Information	TAU001C			
		Medical/Administrative Review	TAU001D			
		Appeals	TAU001E			
		Document History	TAU001F			
2	Intake Processing		TAU201			

Menu Level	Window	Subwindow	Window Code	View	Add	Update
		Services	TAU201B			
2	Assignment of Care		ASC001			
2	Provider Referrals		TAU101			
		Services	TAU101B			
	Provider Cross Coverage		PCC001			
1	Case Management		CME001			
		Enrollment	CME001B			
		Issues	CME001C			
		Clinical Data	CME001F			
		Authorization History	CME001D			
		Document History	CME001E			
2	Member Care Plans		CME002			
2	Standard Care Plans		SCP001			
2	Case Management Enrollment		CEQ001			
2	Case Management Screening Tool		CMS001			
		Determination	CMS001B			
2	OB Information		OBI001			
2	RAND SF36 Health Survey		S36001			
		Activity Limitations	S36001B			
		Physical Health	S36001C			
		Emotional Health	S36001D			
		Bodily Pain	S36001E			
		Energy and Emotions	S36001F			
		General Health	S36001G			
		Survey Results	S36001H			
2	Expedited CMS Appeals		MAP202			
		Processing	MAP202B			
		Decisions	MAP202C			

Menu Level	Window	Subwindow	Window Code	View	Add	Update
		Contact Log	MAP202D			
		CHDR	MAP202E			
		Document Log	MAP202F			
		Event History	MAP202G			
2	Expedited Non-CMS Appeals		MAP302			
		Processing	MAP302B			
		Decisions	MAP302C			
		Contact Log	MAP302D			
		CHDR	MAP302E			
		Document Log	MAP302F			
		Event History	MAP302G			
2	Standard Appeals		MAP102			
		Processing	MAP102B			
		Decisions	MAP102C			
		Contact Log	MAP102D			
		CHDR	MAP102E			
		Document Log	MAP102F			
		Event History	MAP102G			
1	Contact Management		CON001			
2	Member Survey		SRP001			
2	Provider Surveys		SRP101			
2	Other Surveys		SRP201			
3	Survey Builder		SBR001			
		Survey Options	SBR001B			
		Scoring Details	SBR001C			
3	Survey Types		STY001			
3	Appeal Categories		ACG001			
3	Appeal Extension Reasons		LIB116			

Menu Level	Window	Subwindow	Window Code	View	Add	Update
3	Quick Appeal Outcomes		LIB282			
3	Appeal Types		ATE001			
3	Appeal Override Reasons		LIB152			
3	Appeal Reasons		LIB001			
3	Appeal Relationships		ARL001			
3	Appeals Document Button Access		MBA001			
3	CHDR Decisions		CHD001			
3	CHDR Rationales		LIB190			
3	Contact Reasons - Appeals		LIB088			
3	Criteria Assessment Reasons		CAN001			
3	Contact Reasons		COR001			
3	Authorization Profiles		APF001			
3	Authorization Status		AST001			
3	Case Types		CTE001			
3	Determination Reasons		DTR001			
3	Dispositions		DDS101			
3	Event Classifications		LIB257			
3	Inpatient Review Reasons		IRR001			
3	Level of Care Reasons		LCR001			
3	Levels of Care		LOC001			
3	Outcome Reasons		OTR001			
3	Outcomes		LIB085			
3	Reasons For Override		LIB015			
3	Reimbursement Types		LIB212			
3	Review Criteria Sets		RCT001			
3	Review Reasons		RVR001			
3	Status Change Reasons		SCA001			
3	Targeted Medical Management		TMM001			

Menu Level	Window	Subwindow	Window Code	View	Add	Update
		Targeted Diagnoses	TMM001B			
		Targeted Procedures	TMM001C			
		Targeted Providers	TMM001D			
3	Case Management Goals		CGL001			
3	Contact Reasons - Case Management		PCR001			
3	Clinical Data Categories		LIB272			
3	Clinical Data Items		CDI001			
3	Clinical Data Reasons		LIB273			
3	Clinical Data Routes		ARO001			
3	Case Level Tool		CLT001			
3	Issues		LIB274			
3	Case Manager Rosters		STF010			
3	Health Management Programs		HMP001			
3	High Tech Needs		LIB241			
3	Interventions		LIB082			
3	New Case Responses		NCR001			
3	Client Accounting IDs		CLC001			
3	Client Divisions		TPD001			
3	Client Information Categories		LIB259			
3	Client Invoice Frequencies		LIB260			
3	Client Invoice Reporting		LIB261			
3	Client Invoice Types		LIB262			
3	Client Services		TPS001			
		Service Details	TPS001B			
3	Client Types		TPT001			
3	Clients		TPA001			
		Service Groups	TPA001B			
		Services	TPA001C			

Menu Level	Window	Subwindow	Window Code	View	Add	Update
		Contact Addresses	TPA001D			
		Standard Reports	TPA001E			
		Additional Information	TPA001F			
3	Contact Entity Types		COY001			
3	General Ledger Accounts		LIB270			
3	Invoice Fee Types		LIB263			
3	Invoice Rollup IDs		LIB268			
3	NAICS Categories		LIB269			
3	Noncompliance Penalties		NCP001			
3	Plan Governing Agencies		PGV001			
3	Contact Attitudes		LIB264			
3	Contact Issue Resolutions		LIB265			
3	Contact Reasons		COR001			
3	Contact Types		LIB045			
3	DSM Axis IV		DXC201			
3	DSM Axis V		DXC301			
3	ICD-9-CM Diagnoses		DXC001			
3	Site-Defined Diagnoses		DXC101			
3	Treatment Diagnosis Groups		TDG001			
3	Care Classifications		CCL001			
3	Contract Types		CRY001			
3	Coverage Denial		LIB048			
3	Coverage Termination		LIB025			
3	Disabilities		LIB081			
3	Drug Benefits		LIB087			
3	Employee Types		LIB089			
3	Employer Groups		ORG211			

Menu Level	Window	Subwindow	Window Code	View	Add	Update
		Contact Person Information	ORG211B			
		Payer Plans	ORG211C			
3	Leave of Absence		LIB095			
3	Medicare Eligibility		LIB098			
3	Member ID Modifiers		LIB108			
3	Member ID Types		MIT001			
3	Member Information		MEM001			
		Identification	MEM001B			
		Birth/Health Information	MEM001C			
		Next of Kin	MEM001D			
		Plans/Groups	MEM001E			
		Coverage	MEM001F			
		Allergies/Disabilities	MEM001G			
		Enrollment	MEM001H			
		Pre-Existing	MEM001I			
		Coordination of Benefits	MEM001J			
3	Member Roles		MRO001			
3	Pre-existing Waive Checks		LIB106			
3	Psychiatric Status		LIB114			
3	Birth Statuses		OBS001			
3	Detained Baby Dispositions		LIB266			
3	Detained Baby Reasons		LIB267			
3	Episode Meanings		OBE001			
3	OB Outcomes		OBO001			
3	Health Plan Products		LIB192			
3	Payer Plan Attributes		PLA001			
3	Payer Plan Deductibles		LIB101			

Menu Level	Window	Subwindow	Window Code	View	Add	Update
3	Payer Plan Riders		LIB103			
3	Payer Plan Tiers		LIB104			
3	Payer Plan Types		LIB041			
3	Payer Plans		OPP001			
		Attributes	OPP001B			
3	Payers		ORG091			
		Contact Person Information	ORG091B			
		Plans	ORG091C			
3	CPT Procedures		PXC201			
3	HCPCS Procedures		PXC301			
3	ICD-9-CM Procedures		PXC001			
3	NDC Procedures		PXC401			
3	NUBC Revenue Codes		PXC501			
3	Site-Defined Procedures		PXC101			
3	Treatment Procedure Groups		TPG001			
3	Affiliation Types		AFT001			
3	Affiliations		AFC001			
		Addresses	AFC001B			
		Services/Restrictions	AFC001C			
		Classifications/Specialties	AFC001D			
		Lines Of Business/Networks	AFC001E			
3	Capitation Contract Types		LIB047			
3	Integrated Delivery Networks		IDN001			
3	Lines of Business		LIB097			
3	Panels		LIB242			
3	Participation Levels		LIB243			

Menu Level	Window	Subwindow	Window Code	View	Add	Update
3	Patient Types		LIB177			
3	Plan Provider Types		LIB002			
3	Provider Change Reasons		LIB188			
3	Provider Classifications		LIB235			
3	Provider Groups		LIB107			
3	Provider ID Modifiers		LIB236			
3	Provider ID Types		PIT001			
3	Provider Information		PVD001			
		Identification	PVD001B			
3	Provider Networks		LIB195			
3	Provider Roles		PVR001			
3	Provider Types		PVT001			
3	Restriction Reasons		LIB237			
3	Termination Reasons		LIB119			
3	User-Defined Licenses		LIB030			
3	Place of Service Profiles		POP001			
		Procedures	POP001B			
3	Places of Service		POS001			
3	Service Areas		LIB156			
3	Service Restrictions		SRN001			
3	Service Types		LIB147			
3	Services		SEV001			
3	Address Book		ADB001			
3	Alerts (where alerts are configured and stored)		ALE001			
3	Assessment Types		CRT001			
3	Assessments		NTA001			
		Assessment Items	NTA001B			

Menu Level	Window	Subwindow	Window Code	View	Add	Update
3	Care Activities		CAC001			
3	Cost Savings Variance Reasons		CVR001			
3	Delivery Priorities		LIB197			
3	Disenrollment Reasons		LIB169			
3	Document Types		DCT001			
3	Hospital Treatment Services		LIB186			
3	LOINC Codes		LOI001			
3	Note Template Categories		LIB283			
3	Note Templates		NTE001			
		Template Designer	NTE001B			
3	Note Types		NOT001			
3	Payment Status		LIB105			
3	Payment Terms		LIB072			
3	States / Provinces		STA001			
3	Units of Measure		UOM001			
3	Web Notification Types		WNT001			
2	Clinical Pathway Definitions		CPA001			
		Intervals and Headings	CPA001B			
		Line Items	CPA001C			
2	Clinical Pathway Previews		CPA003			
3	Criteria Pages		CPG001			
		Details	CPG001B			
3	Criteria Categories		CRC001			

Menu Level	Window	Subwindow	Window Code	View	Add	Update
		Headings and Intervals	CRC001B			
		Qualifiers	CRC001C			
2	Criteria Set - Authorizations		CRS101			
2	Criteria Set - Case Management		CRS201			
2	InterQual CP-Imaging: Authorizations		CRP303			
		Review Information	CRP303B			
		Case Information	CRP303C			
		Summary	CRP303D			
2	InterQual CP-Imaging: Case Management		CRP503			
		Review Information	CRP503B			
		Case Information	CRP503C			
		Summary	CRP503D			
2	InterQual Care Planning: Authorizations		CRP203			
		Review Information	CRP203B			
		Case Information	CRP203C			
		Summary	CRP203D			
2	InterQual Care Planning: Case Management		CRP403			
		Review Information	CRP403B			
		Case Information	CRP403C			
		Summary	CRP403D			
2	InterQual Level of Care: Authorizations		CRP101			
		Case Information	CRP101B			
		Summary	CRP101C			
		Prerequisites	CRP101D			
		Severity of Illness	CRP101E			
		Intensity of Service	CRP101F			
		Discharge Screens	CRP101G			

Menu Level	Window	Subwindow	Window Code	View	Add	Update
2	InterQual Level of Care: Case Management		CRP201			
		Case Information	CRP201B			
		Summary	CRP201C			
		Prerequisites	CRP201D			
		Severity of Illness	CRP201E			
		Intensity of Service	CRP201F			
		Discharge Screens	CRP201G			
2	InterQual LOC-ORC: Authorizations		CRP603			
		Review Information	CRP603B			
		Case Information	CRP603C			
		Summary	CRP603D			
		Prerequisites	CRP301D			
		Severity of Illness	CRP301E			
		Intensity of Service	CRP301F			
		Discharge Screens	CRP301G			
2	InterQual LOC-ORC: Case Management		CRP703			
		Review Information	CRP703B			
		Case Information	CRP703C			
		Prerequisites	CRP401D			
		Severity of Illness	CRP401E			
		Intensity of Service	CRP401F			
		Discharge Screens	CRP401G			
2	Pathway Reviews - Authorizations		CPA202			
		Review Information	CPA202B			
2	Pathway Reviews - Case Management		CPA302			
		Review Information	CPA302B			
2	Review Based Evaluation - CM		CM-CME			