Column Name	Description	Type	Length	Precision	Primary Key
amt_mia_ppscapfspDRG	Medicare Inpatient Adjudication - This is the Prospective Payment System (PPS) capital, federal-specific portion, Diagnosis Related Group (DRG) amount.	NUMBER	9	2	N
amt_mia_ppscaphspDRG	Medicare Inpatient Adjudication - This is the Prospective Payment System (PPS) capital, disproportionate share, hospital Diagnosis Related Group (DRG) amount.	NUMBER	9	2	N
amt_mia_ppscapdshDRG	Medicare Inpatient Adjudication - This is the Prospective Payment System (PPS) capital, disproportionate share, hospital Diagnosis Related Group (DRG) amount.	NUMBER	9	2	N
amt_mia_old_capital	Medicare Inpatient Adjudication - Old Capital Amount.	NUMBER	9	2	N
amt_mia_pps_captime	Medicare Inpatient Adjudication - This is the Prospective Payment System (PPS) capital indirect medical education claim amount.	NUMBER	9	2	N
amt_mia_ppsophospDRG	Medicare Inpatient Adjudication - PPS-Operating Hospital Specific DRG Amount	NUMBER	9	2	N
cnt_mia_costrpt_days	Medicare Inpatient Adjudication - Cost Report Day Count	NUMBER	6	0	N

Column Name	Description	Type	Length	Precision	Primary Key
amt_mia_ppsopfedDRG	Medicare Inpatient Adjudication - PPS-Operating Federal Specific DRG Amount.	NUMBER	9	2	N
amt_mia_clm_pps_cap_out	Medicare Inpatient Adjudication - Claim PPS Capital Outlier Amount.	NUMBER	9	2	N
amt_mia_clm_indir_teach	Medicare Inpatient Adjudication - Claim Indirect Teaching Amount.	NUMBER	9	2	N
amt_mia_nonpay_prof	Medicare Inpatient Adjudication - Nonpayable Professional Component Amount.	NUMBER	9	2	N
cde_mia_remark_2	Medicare Inpatient Adjudication - Remark Code.	VARCHAR2	30	0	N
cde_mia_remark_3	Medicare Inpatient Adjudication - Remark Code.	VARCHAR2	30	0	N
cde_mia_remark_4	Medicare Inpatient Adjudication - Remark Code.	VARCHAR2	30	0	N
cde_mia_remark_5	Medicare Inpatient Adjudication - Remark Code.	VARCHAR2	30	0	N
amt_mia_pps_cap_ex	Medicare Inpatient Adjudication - PPS-Capital Exception Amount.	NUMBER	9	2	N

2.13.69 T_CLM_MISC

This table stores claim miscellaneous information required by some states. Information on this table may or may not be used for claim auditing. When used in auditing, information on this table is accessed directly from this table along with the related medical policy tables. Based on each state's needs, this table may contain miscellaneous information billed on any claim form.

Column Name	Description	Type	Length	Precision	Primary Key
SAK_CLAIM	System assigned key which uniquely identifies a claim in the system.	NUMBER	9	0	Y
NUM_DTL	The number of the detail on a claim record.	NUMBER	4	0	Y
QLF_MISC_TYPE	This qualifier identifies the type of information under CDE_MISC. Values are: EI - Employee Identification, SI - School Identification, PT - Pick-up Time (transportation claims).	VARCHAR2	5	0	N
CDE_MISC	A code used in claims processing, such as Employee Identification, School Identification or Pickup time (HHMM). The information on this attribute is determined on the qualifier QLF_MISC_TYPE.	VARCHAR2	11	0	N
NUM_INDV_GROUP	Number of individuals in a group. Used for group therapy services.	NUMBER	2	0	N
SEQ_NUM_IMMUN	Immunization sequence on a series of vaccinations.	NUMBER	2	0	N
SEQ_NUM_IMMUN_2	Immunization sequence on a series of vaccinations.	NUMBER	2	0	N
SEQ_NUM_IMMUN_3	Immunization sequence on a series of vaccinations.	NUMBER	2	0	N

Column Name	Description	Type	Length	Precision	Primary Key
CDE_REFERRAL_1	First EPSDT/Primary Care Referral Code. EPSDT and primary care providers are responsible for providing or arranging for the member's primary care and for referral of other medical services. A service provided to a member by a medical provider other than the assigned EPSDT/primary care provider is not covered unless an appropriate referral has been made. The referral code identifies the type/reason for a referral.	CHAR	2	0	N
CDE_REFERRAL_2	Second EPSDT/Primary Care Referral Code. EPSDT and primary care providers are responsible for providing or arranging for the member's primary care and for referral of other medical services. A service provided to a member by a medical provider other than the assigned EPSDT/primary care provider is not covered unless an appropriate referral has been made. The referral code identifies the type/reason for a referral.	CHAR	2	0	N

Column Name	Description	Type	Length	Precision	Primary Key
CDE_REFERRAL_3	Third EPSDT/Primary Care Referral Code. EPSDT and primary care providers are responsible for providing or arranging for the member's primary care and for referral of other medical services. A service provided to a member by a medical provider other than the assigned EPSDT/primary care provider is not covered unless an appropriate referral has been made. The referral code identifies the type/reason for a referral.	CHAR	2	0	N

2.13.70 T_CLM_MOA

This table contains information received from the 837 Institutional transaction. The purpose of the data is to provide claim level data related to the adjudication of Medicare outpatient claims. For additional information about the data, refer to the appropriate 837 Institutional HIPAA Implementation Guide.

Column Name	Description	Type	Length	Precision	Primary Key
SAK_CLAIM	System assigned key which uniquely identifies a claim in the system.	NUMBER	9	0	Y
SAK_PAYER	Unique identifier for a Payer.	NUMBER	9	0	Y
num_moa_reimb_pcnt	Medicare Outpatient Adjudication - Reimbursement Rate Percent. Percentage expressed as a decimal.	NUMBER	10	2	N
amt_moa_hcpcs_paybl	Medicare Outpatient Adjudication - This is the claim Health Care Financing Administration Common Procedural Coding System (HCPCS) payable amount.	NUMBER	9	2	N
cde_moa_remark_1	Medicare Outpatient Adjudication - Remark Code.	VARCHAR2	30	0	N

Column Name	Description	Type	Length	Precision	Primary Key
cde_moa_remark_2	Medicare Outpatient Adjudication - Remark Code.	VARCHAR2	30	0	N
cde_moa_remark_3	Medicare Outpatient Adjudication - Remark Code	VARCHAR2	30	0	N
cde_moa_remark_4	Medicare Outpatient Adjudication - Remark Code	VARCHAR2	30	0	N
cde_moa_remark_5	Medicare Outpatient Adjudication - Remark Code	VARCHAR2	30	0	N
amt_moa_esrd_payment	Medicare Outpatient Adjudication - Claim End Stage Renal Disease (ESRD) Payment Amount.	NUMBER	9	2	N
amt_moa_nonpay_prof	Medicare Outpatient Adjudication - Nonpayable Professional Component Amount	NUMBER	9	2	N

2.13.71 T_CLM_MODIFIER

This table contains information received from the 837 Professional transaction. The purpose of the data is to convey service line adjudication information for coordination of benefits between the initial payers of a health care claim and all subsequent payers. For additional information about the data, refer to the 837 Professional HIPAA Implementation Guide.

Column Name	Description	Type	Length	Precision	Primary Key
SAK_CLAIM	System assigned key which uniquely identifies a claim in the system.	NUMBER	9	0	Y
NUM_DTL	The number of the detail on the claim.	NUMBER	4	0	Y
SEQ	Position of the modifier within the detail.	NUMBER	4	0	Y
CDE_MODIFIER	Code used to further define a procedure provided.	CHAR	2	0	N

2.13.72 T_CLM_NAME_NM1

This table contains the names of providers and members that were submitted on 837 transactions. The information is used if an outbound 837 needs to be generated. Names for a provider or member only appear on the table once unless there are differences in the values received on the 837 transactions.

Column Name	Description	Type	Length	Precision	Primary Key
SAK_CLM_NAME	The sak of the name fields on the table. Uniquely identifies each row of this table.	NUMBER	9	0	Y
NAM_LAST	The last name of the recipient/provider or the name of the organization	VARCHAR2	35	0	N
NAM_FIRST	The first name of the recipient/provider if entity is an individual.	VARCHAR2	25	0	N
NAM_MIDDLE	The middle name of the recipient/provider if entity is an individual.	VARCHAR2	25	0	N
NAM_SUFFIX	The name suffix of the recipient/provider if entity is an individual.	VARCHAR2	10	0	N

2.13.73 T_CLM_NTE

This table contains information received from the 837 transaction. The purpose of the data is to transmit information in a free-form format for comment or instruction. For additional information about the data, refer to the appropriate 837 HIPAA Implementation Guide.

Column Name	Description	Type	Length	Precision	Primary Key
SAK_CLAIM	System assigned key which uniquely identifies a claim in the system.	NUMBER	9	0	Y
NUM_DTL	The number of the detail on a claim record.	NUMBER	4	0	Y
NUM_DTL	The number of the detail on a claim record.	NUMBER	4	0	Y
CDE_NOTE	Code identifying the functional area or purpose for which the note applies	VARCHAR2	3	0	Y
DSC_NOTE	A free-form description to clarify the related data elements and their content	VARCHAR2	80	0	Y

2.13.74 T_CLM_OTH_PYR_DTL

This is the detail of some other Payer adjudication of the service line. One or more Payers may have adjudicated the services before Medicaid receives the claim. For each Payer there may be one or more instances of this entity.

Column Name	Description	Type	Length	Precision	Primary Key
SAK_CLAIM	System assigned key which uniquely identifies a claim in the system.	NUMBER	9	0	Y
NUM_DTL	The detail number of a claim record.	NUMBER	4	0	Y
NUM_DTL	The number of the detail on a claim record.	NUMBER	4	0	Y
NUM_DTL	The number of the detail on the claim.	NUMBER	4	0	Y
SAK_PAYER	Unique identifier for a Payer.	NUMBER	9	0	Y
NUM_DTL_SVD	This is the sequence number of the SVD segment within a claim detail. Up to 25 SVD segments may be related to a detail.	NUMBER	4	0	Y
Amt_Service_Paid	Service line paid amount	NUMBER	9	2	N
Qlf_Procedure_Code	Qualifier for the Procedure code	CHAR	2	0	N
Cde_Procedure	Procedure Code identifying the service provided.	VARCHAR2	48	0	N
Qty_Service	Numeric value of quantity If a decimal is needed to report units, include it in this element, for example, "15.6".	NUMBER	6	2	N
qlf_svc_adjud_dte	Date Time Qualifier for Service Adjudication Date. Code specifying type of date or time, or both date and time.	VARCHAR2	3	0	N
qlf_svc_adjud_dte_fmt	Date Time Period Format Qualifier for Service Adjudication Date. Code indicating the date format, time format, or date and time format.	CHAR	2	0	N

Column Name	Description	Type	Length	Precision	Primary Key
dte_service_adjud	Service Adjudication Date	DATE	0	0	N
CDE_REVENUE	This identifies a specific accommodation or ancillary service. Revenue codes are determined by HCFA	VARCHAR2	48	0	N
Num_Assigned	The service line into which this service line was bundled. Use the LX from this transaction which points to the bundled/unbundled line. Required if payer bundled/unbundled this service line. Number assigned for differentiation within a transaction set	NUMBER	3	0	N
Dsc_Service	A free-form description to clarify the related data elements and their content.	VARCHAR2	80	0	N

2.13.75 T_CLM_PATLIAB_X

This table represents the association between a nursing home claim and the patient liability amount that was applied to it. When a nursing home claim is processed, all of the used patient liability for the member for the month of service is accumulated. If this accumulated amount is less than the total patient liability amount on the member's patient liability segment, then the amount left (up to the total allowed amount of the claim) is applied to the claim. When an amount is applied to a claim, a row is added to this table to represent that amount.

Column Name	Description	Type	Length	Precision	Primary Key
SAK_CLAIM	System assigned key which uniquely identifies a claim in the system.	NUMBER	9	0	Y
NUM_DTL	The detail number of a claim record. If zero (0), the row contains header information.	NUMBER	4	0	Y
SAK_RECIP	The system assigned internal key for a unique recipient.	NUMBER	9	0	N
SAK_FIN_PAYER	The system assigned key that identifies a unique payer within interChange.	NUMBER	9	0	N

Column Name	Description	Type	Length	Precision	Primary Key
DTE_YEAR_MTH	This is the year and month of the date of service of the claim that used the patient liability.	NUMBER	9	0	N
AMT_PD_PAT_UB	This is the amount of patient liability that was used on the claim.	NUMBER	10	2	N
CDE_STATUS1	Indicates whether the cross-reference record is active or not. It will become inactive only after an adjustment to the claim is released. Only active rows are used in accumulating used patient liability. 'I' is for Inactive records, 'A' is for Active records.	CHAR	1	0	N
IND_SHORT_TERM	Determines if spenddown is for LTC or short term. Values are: 'A', 'B' for Crossover related data; 'M','S' for Spenddown related data; 'N','P' for Patient Liability related data.	CHAR	1	0	N
SAK_CASE	The system assigned key that identifies the recipient's case number.	NUMBER	9	0	N
DTE_FIRST_SVC	The beginning date of service for the claim.	NUMBER	8	0	N
DTE_LAST_SVC	The last date of service for the claim.	NUMBER	8	0	N

2.13.76 T_CLM_PAYER_ENTITY

These are the different entities associated with Other Subscriber information on the 837 transaction. Only subscriber has both name and address information. Patient has name only. The other entities do not have names or addresses, only Reference Identifiers, nor do the provider entities have Taxonomy codes.

Column Name	Description	Type	Length	Precision	Primary Key
SAK_CLAIM	System assigned key which uniquely identifies a claim in the system.	NUMBER	9	0	Y
NUM_DTL	The number of the detail on a claim record.	NUMBER	4	0	Y
SAK_PAYER	Unique identifier for a Payer.	NUMBER	9	0	Y

Column Name	Description	Type	Length	Precision	Primary Key
QLF_ENTITY_TYPE	The value of PR. It is stored here so that it can be mapped to the outbound 837 transaction. Indicates the type of entity. Example: DN - Referring Provider, P3 - Primary Care Provider, 82 - Rendering Provider, IL - Insured or Subscriber, PR - Payer QC - Patient. The list above is not exhaustive.	CHAR	3	0	Y
QLF_TYPE_ORG	Indicates whether the entity is a person or a non-person. Values are: 1 - Person 2 - Non-Person Entity	CHAR	2	0	N

2.13.77 T_CLM_PGM_XREF

This entity is the financial transaction record for the claim. This element can be associated to the header or to the details of a claim. This element contains the public health code and fund code. The claim engine uses these two attributes to ensure that funds are directed to the appropriate services. This element is also used to account for special arrangements for managed care or state owned organizations.

Column Name	Description	Type	Length	Precision	Primary Key
SAK_CLAIM	System assigned key which uniquely identifies a claim in the system.	NUMBER	9	0	Y
NUM_DTL	The number of the detail on a claim record.	NUMBER	4	0	Y
SAK_PUB_HLTH	System assigned internal key for a recipient plan.	NUMBER	9	0	Y
SAK_FUND_CODE	This is the unique system assigned key to the Financial Fund Codes.	NUMBER	9	0	Y
SAK_FIN_PAYER	The system assigned key that identifies a unique payer within interChange.	NUMBER	9	0	Y

Column Name	Description	Type	Length	Precision	Primary Key
SAK_ASNGMT_BENE	System assigned internal key for a recipient plan.	NUMBER	9	0	N
CDE_RATE_TYPE	Code used to identify the rate type to use in determining provider reimbursement.	CHAR	3	0	N
IND_PRICING	Pricing indicator which dictates the method by which a procedure must be priced or indicates how a claim detail was priced.	CHAR	6	0	N
CDE_CLM_TYP	Value for the type of claim that can be processed in the MMIS system.	CHAR	1	0	N
SAK_PAYABLE_BNFT	This is the unique system assigned that identifies each row on this table.	NUMBER	9	0	N
SAK_COVERED_BNFT	System Assigned Key used to identify a unique row for a benefit covered by a recipient plan. where SAK_COV_BNFT_NULL points to rule1 for the "Head" group.	NUMBER	9	0	N
SAK_THREAD	System assigned key used to uniquely identify a hierarchy thread. The hierarchy thread is used to identify the order of processing of Financial Payers, Benefit Plans, or Assignment Plans for beneficiaries who are enrolled in multiple entities of any of these types..	NUMBER	9	0	N

Column Name	Description	Type	Length	Precision	Primary Key
SAK_THREAD_PAYER	System assigned key used to uniquely identify a hierarchy thread. The hierarchy thread is used to identify the order of processing of Financial Payers, Benefit Plans, or Assignment Plans for beneficiaries who are enrolled in multiple entities of any of these types..	NUMBER	9	0	N
SAK_THREAD_ASSIGNMENT	System assigned key used to uniquely identify a hierarchy thread. The hierarchy thread is used to identify the order of processing of Financial Payers, Benefit Plans, or Assignment Plans for beneficiaries who are enrolled in multiple entities of any of these types..	NUMBER	9	0	N
SAK_CDE_AID	System assigned key to uniquely identify a valid aid category.	NUMBER	9	0	N
AMT_ALWD	Amount approved to pay for services provided to a beneficiary under a financial payer/benefit plan.	NUMBER	9	2	N
AMT_PAID	This is the amount that will be applied toward the check amount.	NUMBER	10	2	N
AMT_CO_PAY	Amount paid by recipient for services rendered.	NUMBER	7	2	N

Column Name	Description	Type	Length	Precision	Primary Key
AMT_STATE_SHARE	This is the amount of state share for this payment. The state share amount plus the AMT_PAID = reimbursement amount.	NUMBER	10	2	N
AMT_ENCOUNTER	This contains the amount for encounter services on the claim detail indicated by the detail number on the table..	NUMBER	10	2	N
QTY_ALLOWED	Number of units of service that will be paid under a financial payer/benefit plan.	NUMBER	6	2	N
DTE_FINAL	Date that financial finalizes the claim for this Payer.	NUMBER	8	0	N
IND_MC	Manage care indicator identifies claims and other transactions as to how they affect the manage care program. Values (' ' - fee for service, 'F' - Plus fee for service, 'H' - Plus encounter, 'I' - Plus Indian fee for service, 'J' - Choice Indian fee for service, 'M' - Plus Encounter w/ stop loss, 'O' - Choice encounter w/ stop loss, 'P' - Choice encounter, 'R' - Choice fee for service, 'W' - Choice fee for service requiring recovery, 'Y' - Plus fee for service requiring capitation recovery,	CHAR	1	0	N

2.13.78 T_CLM_PHRM_PAPER_IMG

Table is used ONLY by the PBM pharmacy paper imaging process to store the ICN and other key values for the pharmacy paper images.

Column Name	Description	Type	Length	Precision	Primary Key
num_icn	Claim ICN. Format: RRYYDDDBBBSSS RR=region, YYDDD=Julian date, BBB=batch, SSS=sequence number.	CHAR	13	0	Y
cde_claim_status	Status of the claim: L=loaded, K=keyed, A=adjudicated, I=in keying process.	CHAR	1	0	N
cde_clerk_id	ID of the person that clicked on the ICN to enter it through the Web.	CHAR	20	0	N
dte_scanned	Date when the paper claim was originally scanned. This date should be the same as the Julian date in the claim ICN. Shouldn't change once inserted. Format: MM/DD/CCYY	NUMBER	8	0	N
dte_loaded	Date when the paper claim was loaded into this table. Updated by the process that loads records from the image file into this table. Shouldn't change once inserted. Format: MM/DD/CCYY	NUMBER	8	0	N
dte_keyed	Date when the paper claim was keyed into system. Updated once the claim has been keyed into the system. Shouldn't change once inserted. Format: MM/DD/CCYY	NUMBER	8	0	N
dte_last_change	Date this record was last changed. This should be updated anytime a clerk or system process updates this record. Format: MM/DD/CCYY	NUMBER	8	0	N

2.13.79 T_CLM_PHRM_

Table is used ONLY by the PBM pharmacy paper imaging process to store the ICN and other key values for the pharmacy paper images.

Column Name	Description	Type	Length	Precision	Primary Key
num_icn	Claim ICN. Format: RRYYDDDBBBSSS RR=region, YYDDD=Julian date, BBB=batch, SSS=sequence number.	CHAR	13	0	Y
cde_claim_status	Status of the claim: L=loaded, K=keyed, A=adjudicated, I=in keying process.	CHAR	1	0	N
cde_clerk_id	ID of the person that clicked on the ICN to enter it through the Web.	CHAR	20	0	N
dte_scanned	Date when the paper claim was originally scanned. This date should be the same as the Julian date in the claim ICN. Shouldn't change once inserted. Format: MM/DD/CCYY	NUMBER	8	0	N
dte_loaded	Date when the paper claim was loaded into this table. Updated by the process that loads records from the image file into this table. Shouldn't change once inserted. Format: MM/DD/CCYY	NUMBER	8	0	N
dte_keyed	Date when the paper claim was keyed into system. Updated once the claim has been keyed into the system. Shouldn't change once inserted. Format: MM/DD/CCYY	NUMBER	8	0	N
dte_last_change	Date this record was last changed. This should be updated anytime a clerk or system process updates this record. Format: MM/DD/CCYY	NUMBER	8	0	N

2.13.80 T_CLM_PWK

This table contains information received from the 837 transaction. The purpose of the data is identify the type or transmission or both of paperwork or supporting information. For additional information about the data, refer to the appropriate 837 HIPAA Implementation Guide.

Column Name	Description	Type	Length	Precision	Primary Key
SAK_CLAIM	System assigned key which uniquely identifies a claim in the system.	NUMBER	9	0	Y
NUM_DTL	The detail number of a claim record.	NUMBER	4	0	Y
NUM_DTL	The number of the detail on the claim.	NUMBER	4	0	Y
NUM_DTL	The number of the detail on a claim record.	NUMBER	4	0	Y
cde_rpt_type	Report Type Code. Code identifying the title or contents of a document, report or supporting item.	CHAR	2	0	Y
cde_attachment_control	Code identifying a party or other code.	VARCHAR2	80	0	Y
cde_rpt_transmission	Code defining timing, transmission method or format by which reports are to be sent. Valid Values are: AA - Available on Request at Provider Site; EM - EM - Mail; FX - By Fax; BM - By Mail; EL - Electronically Only.	CHAR	2	0	N
qlf_attachment	Code designating the system/method of code structure used for identification code.	CHAR	2	0	N
dsc_Attachment	A free-form description to clarify attachment and the contents.	VARCHAR2	80	0	N

2.13.81 T_CLM_PYR_ENTNMADR

This entity represents multiple subtypes. The subtypes are associated with the Other Subscriber information on the 837 transaction. With the exception of the Payer itself, some or all the entities identified in the 2330 loops may have rows on this table. The only type of entity for which the address is present is the SUBSCRIBER. For the other entities only the names are present. Secondary identifiers from the REF segments are also captured and related to the name - address if applicable - on the claim. A Party may provide secondary identifiers to facilitate its identification. Examples: TJ - Federal Taxpayer ID. This may be used to identify a referring provider. 0B - State License Number 1A - Blue Cross Provider Number F8 - Original Reference Number. In Coordination of Benefits situation, this may be used to indicate the Payer's claim number. For additional information about the data, refer to the appropriate 837 HIPAA Implementation Guide.

Column Name	Description	Type	Length	Precision	Primary Key
SAK_CLAIM	System assigned key which uniquely identifies a claim in the system.	NUMBER	9	0	Y
NUM_DTL	The number of the detail on a claim record.	NUMBER	4	0	Y
SAK_PAYER	Unique identifier for a Payer.	NUMBER	9	0	Y
SAK_PARTY_IDENTIFIER	Unique identifier for a Payer.	NUMBER	9	0	Y
QLF_ENTITY_TYPE	The value of PR. It is stored here so that it can be mapped to the outbound 837 transaction. Indicates the type of entity. Example: DN - Referring Provider, P3 - Primary Care Provider, 82 - Rendering Provider, IL - Insured or Subscriber, PR - Payer QC - Patient. The list above is not exhaustive.	CHAR	3	0	Y
SAK_CLM_NAME	The sak of the name fields on the table. Uniquely identifies each row of this table.	NUMBER	9	0	Y
SAK_CLM_ADDR	Unique identifier for rows on this table.	NUMBER	9	0	Y

Column Name	Description	Type	Length	Precision	Primary Key
ind_Primary_ID	Entity represented by this row. This is set to Y if the SAK_PARTY_IDENTIFIER is populated from the NM109 attribute of the NM1 segment The value is set to N if SAK_PARTY_IDENTIFIER is populated from the REF02 attribute of the REF segment meaning that it is a secondary identifier of the entity represented by this row.	CHAR	1	0	N

2.13.82 T_CLM_PYR_MOD

This is the modifier associated with a detail of the claim previously adjudicated by another Payer. In the current X12 standard, each detail may have up to four modifiers.

Column Name	Description	Type	Length	Precision	Primary Key
SAK_CLAIM	System assigned key which uniquely identifies a claim in the system.	NUMBER	9	0	Y
NUM_DTL	The detail number of a claim record.	NUMBER	4	0	Y
NUM_DTL	The number of the detail on a claim record.	NUMBER	4	0	Y
NUM_DTL	The number of the detail on the claim.	NUMBER	4	0	Y
SAK_PAYER	Unique identifier for a Payer.	NUMBER	9	0	Y
NUM_DTL_SVD	This is the sequence number of the SVD segment within a claim detail. Up to 25 SVD segments may be related to a detail.	NUMBER	4	0	Y
SEQ	Position of the modifier within the detail.	NUMBER	4	0	Y
CDE_MODIFIER	Code used to further define a procedure provided.	CHAR	2	0	N

2.13.83 T_CLM_QTY

This table contains information received from the 837 Institutional, Dental and Professional transaction. The purpose of the data is to provide quantity information for the detail. For additional information about the data, refer to the appropriate 837 HIPAA Implementation Guide.

Column Name	Description	Type	Length	Precision	Primary Key
SAK_CLAIM	System assigned key which uniquely identifies a claim in the system.	NUMBER	9	0	Y
NUM_DTL	The number of the detail on a claim record.	NUMBER	4	0	Y
NUM_DTL	The number of the detail on a claim record.	NUMBER	4	0	Y
qlf_quantity	Quantity Qualifier. Code specifying the type of quantity.	CHAR	2	0	Y
num_quantity	Numeric Value of Quantity. For Professional and Dental 837: numeric value of units. For Institutional 837: the unit is days.	NUMBER	6	2	N
cde_unit_of_measure	Unit or Basis for Measurement Code. Code specifying the units in which a value is being expressed or manner in which a measurement has been taken. This is only used in institutional 837.	CHAR	2	0	N

2.13.84 T_CLM_REF

This table contains information received from the 837 Institutional, Dental and Professional transaction. For additional information about the data, refer to the appropriate 837 HIPAA Implementation Guide.

Column Name	Description	Type	Length	Precision	Primary Key
SAK_CLAIM	System assigned key which uniquely identifies a claim in the system.	NUMBER	9	0	Y
NUM_DTL	The number of the detail on a claim record.	NUMBER	4	0	Y
NUM_DTL	The number of the detail on a claim record.	NUMBER	4	0	Y
SAK_PAYER	Unique identifier for a Payer.	NUMBER	9	0	Y

Column Name	Description	Type	Length	Precision	Primary Key
QLF_ENTITY_TYPE	The value of PR. It is stored here so that it can be mapped to the outbound 837 transaction. Indicates the type of entity. Example: DN - Referring Provider, P3 - Primary Care Provider, 82 - Rendering Provider, IL - Insured or Subscriber, PR - Payer QC - Patient. The list above is not exhaustive.	CHAR	3	0	Y
CDE_REF_ID	Reference information as defined for a particular transaction set or as specified by the reference identification qualifier.	VARCHAR2	30	0	Y
QLF_REFERENCE_ID	Code qualifying the CDE_REF_ID.	CHAR	3	0	Y

2.13.85 T_CLM_RU_MATCHED

This is a list of rules that match the conditions that existed when the claim was adjudicated

Column Name	Description	Type	Length	Precision	Primary Key
SAK_CLAIM	The system assigned key that uniquely identifies the claim.	NUMBER	9	0	Y
NUM_DTL	The detail number of the claim.	NUMBER	4	0	Y
NUM_SEQ	The order in which the rule was applied for the claim detail	NUMBER	4	0	Y
CDE_TRANSACTION	This is the unique identifier for this table. Example, CLMS (Claim Submission).	CHAR	4	0	N
SAK_RULE	Primary-Key for this table	NUMBER	9	0	N
CDE_DECISION	A short identifier for the decision. Examples, BP (Recipient Benefit Plan - Procedure), BD (Recipient Benefit Plan - Diagnosis).	CHAR	4	0	N
SAK_BENEFIT	System assigned key used to uniquely identify a benefit (procedure, diagnosis, and so on).	NUMBER	9	0	N

Column Name	Description	Type	Length	Precision	Primary Key
SAK	System assigned key used to uniquely identify a contract or a recipient plan (benefit plan, assignment plan, level of care plan, and so on.).	NUMBER	9	0	N
CDE_STAT_RULE	Code used to indicate if a rule on the claim is a current rule ('C') - a rule that was used in the most recent processing of the claim, or an historical rule ('H') - a rule that was previously used when the claim previously processed..	CHAR	1	0	N

2.13.86 T_CLM_SBR

This table contains information received from the 837 Institutional, Dental and Professional transaction. The data records information specific to the primary insured and the insurance carrier for that insured. For additional information about the data, refer to the appropriate 837 HIPAA Implementation Guide.

Column Name	Description	Type	Length	Precision	Primary Key
SAK_CLAIM	System assigned key which uniquely identifies a claim in the system.	NUMBER	9	0	Y
SAK_PAYER	Unique identifier for a Payer.	NUMBER	9	0	Y
Cde_Payer_Responsib	Code identifying the insurance carrier's level of responsibility for payment of a claim	CHAR	1	0	N
cde_insured_group_number	Reference Identification. Insured Group or Policy Number.	VARCHAR2	30	0	N
Cde_Ind_Relationship	Code identifying the relationship between two individuals or entities	CHAR	2	0	N
nam_insured_group	Insured Group Name. AKA Plan Name.	VARCHAR2	60	0	N

Column Name	Description	Type	Length	Precision	Primary Key
cde_Insurance_Type	Code identifying the type of insurance policy within a specific insurance program.	CHAR	3	0	N
cde_claim_filing_ind	Claim Filing Indicator Code.	CHAR	2	0	N
dte_Patient_Death	Patient's date of death	DATE	0	0	N
cde_Weight_UoM	Unit of measure for weight.	CHAR	2	0	N
num_Weight	Patient's weight	NUMBER	10	0	N
ind_Pregnancy	Indicates whether drug is related to the condition of being pregnant.	CHAR	1	0	N
qlf_Dte_Patient_Death	PAT05 Loop 2000B. Date Time Period Format Qualifier Code indicating the date format, time format, or date and time format. Required if patient is known to be deceased. CODE DEFINITION D8 Date Expressed in Format CCYYMMDD	VARCHAR2	3	0	N
cde_coordination_benefits	Code identifying the coordination of benefits between different insurance carriers.	CHAR	1	0	N

2.13.87 T_CLM_STATUS

Claim Status as defined in the MMIS.

Column Name	Description	Type	Length	Precision	Primary Key
CDE_CLM_STATUS	MMIS Claim Status Code.	CHAR	1	0	Y
DSC_CLM_STATUS	Description of Claim Status.	VARCHAR2	20	0	N
IND_CORRECTIONS	Yes/No value used to identify Claim Status codes that are valid for use in the Claims Data Corrections process.	CHAR	1	0	N

Column Name	Description	Type	Length	Precision	Primary Key
IND_EDIT_DISP	Yes/No value used to identify Claim Status codes that are valid for use in the Claims Dispositioning process.	CHAR	1	0	N
IND_CLM_INQUIRY	Yes/No value used to identify Claim Status codes that are valid for use in the Claims Inquiry process.	CHAR	1	0	N

2.13.88 T_CLM_SUM_ERR_X

Table to cross reference the errors in a batch to specific claims.

Column Name	Description	Type	Length	Precision	Primary Key
SAK_SUM_ERR	System assigned key for the batch/error/claim relationship	NUMBER	9	0	Y
SAK_CLAIM	System assigned key which uniquely identifies a claim in the system.	NUMBER	9	0	Y

2.13.89 T_COS_DTL_XREF

This table stores State and Federal category of service assignments for each record. Based on the CDE_TXN_TYPE, the record is a claim, capitation or financial transaction. This table includes claims (paid and denied) along with other transactions that require category of service assignment for State or Federal reporting.

Column Name	Description	Type	Length	Precision	Primary Key
SAK_RECORD	System assigned key which uniquely identifies a claim in the system.	NUMBER	9	0	Y
NUM_DTL	Detail number for the claim record. Value of zero is used for non-claim records and header processed claims.	NUMBER	4	0	Y
CDE_TXN_TYPE	Code describing the type of record (claim, capitation, financial transaction).	CHAR	1	0	Y
CDE_COS_ST	Code for the State category of service (COS) that defines the grouping of services appearing on State MAR reports.	CHAR	2	0	N

Column Name	Description	Type	Length	Precision	Primary Key
CDE_COS_SUB	Code for a sub-category of service (COS) that provides a more detailed State Category of Service classification in MAR state reporting.	CHAR	2	0	N
CDE_COS_MSIS	Code for the MSIS type of service assigned to this record.	CHAR	2	0	N
CDE_COS_CMS64_9	Code for the CMS 64.9 line item assigned to this record.	CHAR	4	0	N
CDE_COS_CMS64_21	Code for the CMS 64.21 line item assigned to this record.	CHAR	4	0	N
CDE_COS_CMS21	Code for the CMS 21 line item assigned to this record.	CHAR	4	0	N
CDE_FUND_SRC	Code identifying the funding source for this record that is used in federal reporting like MSIS and CMS 64.	CHAR	1	0	N

2.13.90 T_CT_TXN_XREF

This table is used in assigning the ICN to the claim.

Column Name	Description	Type	Length	Precision	Primary Key
CDE_ERM_TXN	Code that identifies the type of driver that will execute for claim processing (POS, Pharmacy, Physician, and so on).	NUMBER	9	0	Y
CDE_CLM_TYPE	Code that identifies a type of claim that will process in the MMIS system. For example, 'M' = HCFA 1500, 'P' = Pharmacy	CHAR	1	0	Y

2.13.91 T_DCOR_QLTY_CTL

This table contains criteria used to randomly select suspended claims that are being data corrected and mark them for quality review by a supervisor. Claims are selected at the individual user level based on claim type, the percentage of claims to be reviewed and a maximum number to be reviewed. The release indicator identifies whether the claim should be recycled or not in the event that a supervisor does not review the claim.

Column Name	Description	Type	Length	Precision	Primary Key
ID_CLERK	The identification code of a user that is scheduled to process data corrections.	CHAR	8	0	Y
CDE_CLM_TYPE	One of the 4 major claim types in which data correction scheduling is controlled.	CHAR	1	0	Y
NUM_DCOR_PCT	The percentage chance that any single data correction resubmitted by the user will be intercepted and made available for quality control review by the supervisor.	NUMBER	4	2	N
QTY_DCOR_MAX	The maximum number of data corrections that will be held for supervisor review for a given user.	NUMBER	9	0	N
IND_DCOR_RELEASE	A 'Yes/No' value to indicate whether or not claims identified for supervisor review should be resubmitted in the event that the supervisor is not able to review them on that day.	CHAR	1	0	N

2.13.92 _DCOR_SCHEDULE

This table contains criteria used to schedule suspended claims to individual users for resolution. Claims are scheduled at the individual user level based on claim type, claim location (range), batch (range), region, rendering provider, member ID.

Column Name	Description	Type	Length	Precision	Primary Key
SAK_PROV	System assigned key that uniquely identifies the provider enrollment tracking.	NUMBER	9	0	Y
SAK_PROV_LOC	Service Location SAK	NUMBER	9	0	Y

Column Name	Description	Type	Length	Precision	Primary Key
ID_CLERK	The ID of the clerk who will be assigned the claims selected by the criteria on this scheduling record.	CHAR	8	0	Y
CDE_LOC_FROM	This is the low value for the range of claim locations to assign to a user for data correction.	CHAR	2	0	Y
CDE_LOC_TO	This is the high value for the range of claim locations to assign to a user for data correction.	CHAR	2	0	Y
CDE_CLM_REGION	The value for the claim region to assign to a user for data correction.	CHAR	2	0	Y
CDE_CLM_TYPE	The From batch range to be used in scheduling claims for data correction.	CHAR	1	0	Y
NUM_BATCH_FROM	The To batch range to be used in scheduling claims for data correction.	NUMBER	3	0	N
NUM_BATCH_TO	The to batch range to be used in scheduling.	NUMBER	3	0	N
SAK_RECIP	The system assigned internal key for a unique recipient.	NUMBER	9	0	N
CDE_PROV_ATT_ID	This is an identifier for the attending provider on an institutional claim. This may be a license ID or some other agreed upon provider identifier.	VARCHAR2	30	0	N

2.13.93 T_DENTAL_DTL_KEYS

This table contains dental detail key information specific to the details of dental claims processed in the MMIS.

Column Name	Description	Type	Length	Precision	Primary Key
SAK_CLAIM	System assigned key which uniquely identifies a claim in the system.	NUMBER	9	0	Y

Column Name	Description	Type	Length	Precision	Primary Key
NUM_DTL	The number of the detail on a claim record.	NUMBER	4	0	Y
CDE_PROC	Code that identifies the service performed for a recipient.	CHAR	6	0	N
Cde_Cavity_Desig_1	Oral Cavity Designation Code. Code identifying the area of the oral cavity in which service was rendered.	VARCHAR2	3	0	N
Cde_Cavity_Desig_2	Oral Cavity Designation Code. Code identifying the area of the oral cavity in which service was rendered.	VARCHAR2	3	0	N
Cde_Cavity_Desig_3	Oral Cavity Designation Code. Code identifying the area of the oral cavity in which service was rendered.	VARCHAR2	3	0	N
Cde_Cavity_Desig_4	Oral Cavity Designation Code. Code identifying the area of the oral cavity in which service was rendered.	VARCHAR2	3	0	N
Cde_Cavity_Desig_5	Oral Cavity Designation Code. Code identifying the area of the oral cavity in which service was rendered.	VARCHAR2	3	0	N
Cde_Prosthesis	Prosthesis, crown or inlay code. Code specifying the placement status for the dental work	CHAR	1	0	N
ID_PROV_PERF	The identifier for the performing provider.	CHAR	15	0	N

Column Name	Description	Type	Length	Precision	Primary Key
QTY_BILLED_ORIG	The original number of units billed for the service. All claims will plug a '1' here. Claims converted from the MMIS may have a value greater than '1'.	NUMBER	6	2	N
SAK_PROC_OLD	The old procedure sak used to bundle or unbundle a claim detail.	NUMBER	9	0	N
qlf_svc_date	Stores the service date qualifier.	VARCHAR2	3	0	N
qlf_svc_date_fmt	Stores the service date format qualifier.	VARCHAR2	3	0	N
qlf_procedure_code	Stores sub-element SV301-1	CHAR	2	0	N
qlf_tooth_code_list	Stores sub-element TOO01	VARCHAR2	3	0	N
CDE_PROC_SUB	submitted Procedure Code for HIPAA 835	CHAR	6	0	N
QTY_BILLED_SUB	submitted units billed for HIPAA 835	NUMBER	6	2	N
CDE_PROC_MOD1_SUB	submitted Procedure Modifier1 for HIPAA 835	CHAR	2	0	N
CDE_PROC_MOD2_SUB	submitted Procedure Modifier2 for HIPAA 835	CHAR	2	0	N
CDE_PROC_MOD3_SUB	submitted Procedure Modifier3 for HIPAA 835	CHAR	2	0	N
CDE_PROC_MOD4_SUB	submitted Procedure Modifier4 for HIPAA 835	CHAR	2	0	N

2.13.94 T_DENTAL_HDR_KEYS

Key information specific to the dental claims processed in the system.

Column Name	Description	Type	Length	Precision	Primary Key
SAK_CLAIM	System assigned key which uniquely identifies a claim in the system.	NUMBER	9	0	Y
SAK_FILE	Associates the transaction group with a file identifier that can be used to look up the recording of transaction.	NUMBER	9	0	N
SAK_EDI_Interchange	System assigned key to uniquely identify a EDI record.	NUMBER	9	0	N
ID_MEDICAID	Identification number assigned to a recipient of services.	CHAR	12	0	N
ID_PROVIDER	Identification number assigned to a group or individual who provides services to a recipient.	CHAR	15	0	N
CLM_RECIP_FST_NAM	This is the first three characters of the recipient's name. It is what is keyed on the claim.	VARCHAR2	35	0	N
CLM_LST_NAM_RECIP	This is the first two characters of the recipient's last name. It is what is keyed on the claim.	VARCHAR2	60	0	N
ID_PERF_PROV	Rendering provider identifier.	CHARACTER	15	0	N
cde_Billing_EntityId	Billing provider name identification code.	VARCHAR2	15	0	N
cde_bill_payto_provider	Code identifying the type of provider. CODE DEFINITION BI Billing PT Pay-To	CHAR	3	0	N
Dte_Subscriber_DOB	2000BA - Subscriber Date Of Birth	DATE	0	0	N

Column Name	Description	Type	Length	Precision	Primary Key
Cde_Sub_Gender	Subscriber Gender. Code indicating the sex of the individual: F, M or U.	CHAR	1	0	N
cde_Med_Assignment	CLM07 Loop 2300 Provider Accept Assignment Code. Code indicating whether the provider accepts assignment INDUSTRY: Medicare Assignment Code 2438 NSF Reference: 2438 EA0-36.0, FA0-59.0 CLM07 indicates whether the provider accepts Medicare assignment. The NSF mapping to FA0-59.0 occurs only in payer-to-payer COB situations. CODE DEFINITION A Assigned B Assignment Accepted on Clinical Lab Services Only C Not Assigned P Patient Refuses to Assign Benefits	CHAR	1	0	N
ind_benefits_assignment	Yes/No Condition or Response Code O ID 1/1 Code indicating a Yes or No condition or response INDUSTRY: Benefits Assignment Certification Indicator ALIAS: Assignment of Benefits Indicator CLM08 is assignment of benefits indicator. A "Y" value indicates insured or authorized person authorizes benefits to be assigned to the provider; an "N" value indicates benefits have not been assigned to the provider. NSF Reference: DA0-15.0 CODE DEFINITION N No Y Yes	CHAR	1	0	N

Column Name	Description	Type	Length	Precision	Primary Key
Cde_Release_Info	Release of Information Code.	CHAR	1	0	N
Cde_Related_Cause_1	Accident Related Cause.	CHAR	3	0	N
Cde_Related_Cause_2	Accident Related Cause.	CHAR	3	0	N
Cde_Related_Cause_3	Accident Related Cause.	CHAR	3	0	N
Cde_Accident_State	Accident State.	CHAR	2	0	N
Cde_Accident_Country	Accident Country.	CHAR	3	0	N
Cde_Special_Program	Special Program Code. Code indicating the special program under which the services rendered were performed.	CHAR	3	0	N
Cde_Claim_Submit_Rsn	Claims Submission Reason Code. Code identifying reason for claim submission.	CHAR	2	0	N
Cde_Delay_Reason	Delay Reason Code. Code indicating the reason why a request was delayed.	CHAR	2	0	N
Qty_Ortho_Mths_est	Orthodontic Treatment Months Count. The estimated number of treatment months.	NUMBER	6	0	N
Qty_Ortho_Mths_left	Orthodontic Treatment Months Remaining Count. The number of treatment months remaining.	NUMBER	6	0	N
Ind_Traction_Device	A code indicating presence of an extra traction device. A 'Y' indicates an extra oral traction device; An 'N' indicates no extra oral traction device.	CHAR	1	0	N

Column Name	Description	Type	Length	Precision	Primary Key
num_lines_submitted	Number of line items submitted on the claim form or transaction.	NUMBER	4	0	N
ID_PROV_REFERRING	Number identifying a provider or a case manager who refers recipient to another provider for services.	CHAR	15	0	N
ID_PROV_REFERRING_2	Number identifying a provider or a case manager who refers recipient to another provider for services.	CHAR	15	0	N
qlf_svc_date	Stores the Service Date Qualifier.	VARCHAR2	3	0	N
qlf_svc_date_fmt	Stores the service date format qualifier.	VARCHAR2	3	0	N
qlf_sub_dob_fmt	Stores Subscriber's Date of Birth qualifier.	VARCHAR2	3	0	N
CDE_POS_SUB	submitted place of service for HIPAA 835	CHAR	2	0	N
NUM_PAT_ACCT_SUB	submitted patient account number for HIPAA 835	VARCHAR2	38	0	N

2.13.95 T_DENY_DNTL_DTL

Detailed information concerning dental services that were denied, encountered an error (edit/audit) or approved for payment in the system. When the dental header status is denied, all details associated with that header are written to this table, regardless of the detail's status.

Column Name	Description	Type	Length	Precision	Primary Key
SAK_CLAIM	System assigned key which uniquely identifies a claim in the system.	NUMBER	9	0	Y
NUM_DTL	The number of the detail on a claim record.	NUMBER	4	0	Y
SAK_PROCEDURE	System assigned key for a procedure code on a detail which indicates the service that was provided.	NUMBER	9	0	N

Column Name	Description	Type	Length	Precision	Primary Key
SAK_PROV_PERF	System assigned key that uniquely identifies the provider enrollment tracking.	NUMBER	9	0	N
SAK_PROV_LOC_PERF	Unique identifier for the provider service location	NUMBER	9	0	N
DTE_FIRST_SVC	Date on which services were performed for a recipient.	NUMBER	8	0	N
AMT_BILLED	Amount of money requested for payment by a provider for services rendered to a recipient.	NUMBER	8	2	N
CDE_CLM_STATUS	Indicates the status of the detail in the MMIS system. This can be paid, suspended, or denied.	CHAR	1	0	N
CDE_TOOTH_NBR	Code which indicates the tooth on which a particular service was performed.	CHAR	2	0	N
QTY_BILLED	The number of units billed for the service. All claims will plug a '1' here. Claims converted from the MMIS may have a value greater than '1'.	NUMBER	6	2	N
QTY_ALLOWED	The number of units allowed for the service.	NUMBER	6	2	N
CDE_QUADRANT	The quadrant of the mouth that the procedure on the claim is related to.	CHAR	2	0	N
CDE_PROV_SPEC	Code which indicates the scope of practice or operations of the rendering provider.	CHAR	3	0	N

Column Name	Description	Type	Length	Precision	Primary Key
IND_SYS_GENERATE	Indicates whether detail was added by system during claim's processing. Valid values Y - yes or N - no.	CHAR	1	0	N
amt_detail_TPL	This is the total amount paid by this payer for this detail. This is a derived field computed from the CAS segments on the 837 as follows. The total Provider Adjustment Amt (DA3-25.0) for a detail equals the sum of all the adjustment amounts in CAS 03, 06, 09, 12, 15, and 18. Subtracting this amount form detail billed amounts yields the detail TPL amount.	NUMBER	9	2	N

Column Name	Description	Type	Length	Precision	Primary Key
NUM_DTL_REF	This sequence number points to the original detail or details submitted on the claim. For dental electronic claims this will point to the original detail submitted with more than one tooth number. Bundling. When two or more details are bundled into a single NEW detail, then the original bundled details point to the new bundling detail using a sequence number. The new bundling detail will have the system generated flag on unbundling. This is the reverse of bundling. In this case a detail on a claim is broken out into two or more details that replace the original detail. The new details will have the system generated flag on and will point to the original unbundled detail.	NUMBER	4	0	N
cde_place_of_service	Code identifying the type of facility where services were performed; the first and second positions of the Uniform Bill Type code or the Place of Service code from the Electronic Media Claims National Standard Format.	CHAR	2	0	N

Column Name	Description	Type	Length	Precision	Primary Key
CDE_DIAG_TREAT_IND	Indicates which diagnosis (or diagnoses) for which services were provided. Valid values are 1,2,3,4,5,6,7,8. One detail can be associated with a minimum of 1 diagnosis in the header or maximum of 8 diagnoses in the header for non-transportation claims only.	CHAR	8	0	N
IND_PR_OVERRIDE_PERF	Override Performing Provider calculation	CHAR	1	0	N

2.13.96 T_DENY_DNTL_HDR

General information about dental services that were not approved for payment (denied) in the MMIS. All details associated with denied dental header are written to Denied Dental Detail table.

Column Name	Description	Type	Length	Precision	Primary Key
SAK_CLAIM	System assigned key which uniquely identifies a claim in the system.	NUMBER	9	0	Y
SAK_RECIP	The system assigned internal key for a unique recipient.	NUMBER	9	0	N
PROV_BILLING	System assigned key that uniquely identifies the provider enrollment tracking.	NUMBER	9	0	N
SAK_PROV_LOC	Unique identifier for the provider service location	NUMBER	9	0	N
SAK_PROV_PERF	System assigned key that uniquely identifies the provider enrollment tracking.	NUMBER	9	0	N
SAK_PROV_LOC_PERF	Unique identifier for the provider service location	NUMBER	9	0	N

Column Name	Description	Type	Length	Precision	Primary Key
SAK_PROV_REFERRING	System assigned key that uniquely identifies the provider enrollment tracking.	NUMBER	9	0	N
SAK_PROV_LOC_REF_1	Unique identifier for the provider service location.	NUMBER	9	0	N
SAK_PROV_REFERRING_2	System assigned key that uniquely identifies the provider enrollment tracking.	NUMBER	9	0	N
SAK_PROV_LOC_REF_2	Unique identifier for the provider service location.	NUMBER	9	0	N
NUM_ICN	Number assigned to a claim processed in the system; used for control purposes. Unique number in format RRYYDDDBBBSSS: RR - region, YYDDD - Julian date, BBB - batch number, SSS - sequence number.	CHAR	13	0	N
NUM_DTL_TOTAL	Total number of details associated with the claim header.	NUMBER	4	0	N
CDE_CLM_STATUS	Indicates the status of a claim in the system.	CHAR	1	0	N
CDE_CLM_TXN_TYP	Code which further defines the status of a claim in the MMIS system. This is used to identify whether the claim processed to pay during the first cycle in which it was submitted or whether it took several cycles before the errors were corrected.	CHAR	1	0	N

Column Name	Description	Type	Length	Precision	Primary Key
CDE_CLM_TYPE	Code that specifies the type of claim record. The code for Dental claims is 'D'.	CHAR	1	0	N
NUM_PAT_ACCT	Identification for a recipient assigned by a provider and used in their system. This number is not required for processing (information only).	VARCHAR2	38	0	N
AMT_NET_BILLED	Amount remaining on a claim after payment has been made by all other sources (TPL).	NUMBER	8	2	N
TPL_AMT	Amount paid by a third party for services that were provided.	NUMBER	8	2	N
DTE_BILLED	Date on which the provider or billing service prepared the claim form to be submitted.	NUMBER	8	0	N
AMT_BILLED	Amount requested by the provider for services rendered.	NUMBER	8	2	N
DTE_FIRST_SVC	Date on which service was first provided on a particular claim (oldest date of all details).	NUMBER	8	0	N
DTE_LAST_SVC	Date on which service was last provided on a particular claim (most current date of all details).	NUMBER	8	0	N
AMT_PATNT_LIAB	Amount of money that a recipient is responsible for paying for services rendered.	NUMBER	8	2	N

Column Name	Description	Type	Length	Precision	Primary Key
CDE_POS	Code which indicates the location where service was rendered.	CHAR	2	0	N
IND_EMERGENCY	Indicates whether service was provided as result of an emergency situation.	CHAR	1	0	N
IND_ACCIDENT	Indicates whether the service performed was as a result of an accident.	CHAR	1	0	N
IND_PROV_SIGN	Indicates whether the paper claim form was signed by the provider who performed the service.	CHAR	1	0	N
IND_ANOTHER_PLAN	Indicates whether the recipient on the claim has coverage under another company's insurance plan.	CHAR	1	0	N
ID_CLERK	The ID of the clerk who has been assigned to work this claim.	CHAR	8	0	N
IND_ELECT_CLM	Indicator that identifies paper claims where the provider has been identified as a potential electronic biller.	CHAR	1	0	N
CDE_PROV_SPEC	Code which indicates the scope of practice or operations of the billing provider.	CHAR	3	0	N
CDE_PROV_TYPE	Code which indicates the provider type for which a provider is licensed.	CHAR	2	0	N

Column Name	Description	Type	Length	Precision	Primary Key
CDE_COUNTY	Numeric (geographical/political) representation of the county in the state in which the provider practices.	VARCHAR2	10	0	N
Cde_Claim_Frequency	CLM - Claims Frequency Code. Code specifying the reason for claim submission. Code specifying the frequency of the claim; this is the third position of the Uniform Billing Claim Form Bill Type INDUSTRY: Claim Submission Reason Code	CHAR	1	0	N
IND_CARRIER_DENIED	Indicates if other insurance carrier denied the claim	CHAR	1	0	N
CDE_EPSDT_FP	A code from the ADA 200 claim form indicating EPSDT.	CHAR	1	0	N
DTE_FINAL	A claim may be adjudicated by more than one Payer depending on the beneficiary/recipient coverage. Financial may run different cycles for different Payers on different dates. This date represents date on which the first financial cycle runs for Payers that finalize the claim.	NUMBER	8	0	N

Column Name	Description	Type	Length	Precision	Primary Key
DTE_FINAL_LAST_PAYER	A claim may be adjudicated by more than one Payer depending on the beneficiary/recipient coverage. Financial may run different cycles for different Payers on different dates. This date represents date on which the last financial cycle runs for Payers that finalize the claim.	NUMBER	8	0	N
CDE_ENC_STATUS	Code which indicates the status of the encounter in the system as a result of interChange editing. The values will be T - Threshold, I - Informational or P - paid.	CHAR	1	0	N
IND_ENCOUNTER	This field indicates if the claim is an encounter. Valid values Y or N.	CHAR	1	0	N
IND_PR_OVERRIDE	Override Billing Provider calculation	CHAR	1	0	N
IND_PR_OVERRIDE_PERF	Override Performing Provider calculation	CHAR	1	0	N
IND_PR_OVERRIDE_REF_1	Override Referring Provider 1 calculation	CHAR	1	0	N
IND_PR_OVERRIDE_REF_2	Override Referring Provider 2 calculation	CHAR	1	0	N

2.13.97 T_DENY_PHRM_DTL

Detailed information concerning drug services (pharmacy and compound drug) that were denied or rejected in the system. When the pharmacy header status is denied, all details associated with that header are written to this table, regardless of the detail's status.

Column Name	Description	Type	Length	Precision	Primary Key
SAK_CLAIM	System assigned key which uniquely identifies a claim in the system.	NUMBER	9	0	Y
NUM_DTL	The number of the detail on a claim record.	NUMBER	4	0	Y
CDE_DRUG_FORM	The basic drug measurement unit (each - EA, milliliter - ML, or grams) for performing price calculations.	CHAR	2	0	N
SAK_DRUG	System assigned key for a unique drug	NUMBER	9	0	N
CDE_NDC_STATUS	Indicates whether drug code is prescription only - R, or Non-Legend - spaces.	CHAR	1	0	N
AMT_BILLED	Amount billed by the provider for dispensing a specific drug.	NUMBER	8	2	N
QTY_DISPENSE	Number of units of a drug that was dispensed to a recipient.	NUMBER	10	3	N
CDE_CLM_STATUS	Indicates the status of the detail in the MMIS system.	CHAR	1	0	N
AMT_DETAIL_TPL	Total amount that other insurance paid prior to submission to Medicaid for the service.	NUMBER	9	2	N

2.13.98 T_DENY_PHRM_HDR

General information about drug services (pharmacy and compound drug) that were denied or rejected in the MMIS. All details associated with denied pharmacy header are written to denied pharmacy detail table.

Column Name	Description	Type	Length	Precision	Primary Key
SAK_CLAIM	System assigned key which uniquely identifies a claim in the system.	NUMBER	9	0	Y

Column Name	Description	Type	Length	Precision	Primary Key
SAK_RECIP	The system assigned internal key for a unique recipient.	NUMBER	9	0	N
PROV_BILLING	System assigned key that uniquely identifies the provider enrollment tracking.	NUMBER	9	0	N
SAK_PROV_LOC	Unique identifier for the provider service location	NUMBER	9	0	N
SAK_PROV_RENDERING	System assigned key that uniquely identifies the provider enrollment tracking.	NUMBER	9	0	N
SAK_PROV_LOC_REND	Unique identifier for the provider service location	NUMBER	9	0	N
NUM_DTL_TOTAL	Total number of details associated with claim header.	NUMBER	4	0	N
NUM_ICN	Number assigned to a claim processed in the system used for internal control purposes.	CHAR	13	0	N
TPL_AMT	Amount paid for services by a third party.	NUMBER	8	2	N
CDE_CLM_TXN_TYP	Code which further defines the status of a claim in the MMIS system. This is used to identify whether the claim processed to pay during the first cycle in which it was submitted or whether it took several cycles before the errors were corrected.	CHAR	1	0	N

Column Name	Description	Type	Length	Precision	Primary Key
CDE_CLM_STATUS	Indicates the status of a claim.	CHAR	1	0	N
DTE_BILLED	The date on which a claim entered the system for processing.	NUMBER	8	0	N
DTE_PRESCRIBE	Date physician prescribed a drug for a recipient.	NUMBER	8	0	N
DTE_DISPENSE	Date pharmacy dispensed drug to recipient.	NUMBER	8	0	N
ID_PROV_PRESCRB	License number of the provider who requested drug be administered to a recipient. This does not have to be an enrolled provider.	CHAR	15	0	N
IND_EMERGENCY	Indication (Y/N) of whether drugs were dispensed as a result of an emergency situation.	CHAR	1	0	N
NUM_PRSCRIP	Number assigned by a pharmacy to identify the drug dispensed to a recipient.	CHAR	7	0	N
QTY_REFILL	Number of times drug has been refilled.	CHAR	2	0	N
NUM_DAY_SUPPLY	Number of days a prescribed drug should last a recipient.	NUMBER	9	0	N
CDE_CLM_TYPE	Code that specifies the type of claim record. The code for pharmacy claims is "P".	CHAR	1	0	N
AMT_BILLED	Amount billed by provider for services rendered.	NUMBER	8	2	N

Column Name	Description	Type	Length	Precision	Primary Key
IND_PREGNANCY	Indicates whether service is related to condition of being pregnant.	CHAR	1	0	N
AMT_PATNT_LIAB	Amount of money that a recipient is responsible for paying for services rendered.	NUMBER	8	2	N
IND_NURSE_HOME	Indicates whether the drug was dispensed for a recipient who resides in a nursing home facility.	CHAR	1	0	N
IND_PROV_SIGN	Used to indicate whether or not there was a valid provider signature on the original claim.	CHAR	1	0	N
ID_CLERK	The ID of the clerk who has been assigned to work this claim.	CHAR	8	0	N
AMT_NET_BILLED	Amount remaining on a claim after payment has been made by all other sources (co-pay, TPL).	NUMBER	8	2	N
AMT_NDC_PROFEE	This is the amount that the provider receives for dispensing a prescription drug. This amount varies by provider type.	NUMBER	7	2	N
IND_BRAND_MED_NEC	This field indicates the reason, if any, that a brand name drug was dispensed.	CHAR	1	0	N

Column Name	Description	Type	Length	Precision	Primary Key
CDE_DUR_INTRVNTN	Record of whether a drug utilization and review intervention code was given in response to a DUR alert. The intervention code indicates whom the pharmacist consulted with (nobody, physician, recipient) to decide whether to fill the prescription.	CHAR	2	0	N
CDE_DUR_OUTCOME	The response of the pharmacist to the DUR conflict code. This code indicates whether the prescription was filled as is, not filled, or changed.	CHAR	2	0	N
IND_ELECT_CLM	Indicator that identifies paper claims where the provider has been identified as a potential electronic biller.	CHAR	1	0	N
QTY_DISPENSE	The number of units of a drug dispensed to a recipient.	NUMBER	10	3	N
CDE_PROV_SPEC	Code which indicates the scope of practice or operations of the billing provider.	CHAR	3	0	N
CDE_PROV_TYPE	Code which indicates the provider type for which a provider is licensed.	CHAR	2	0	N
CDE_COUNTY	Numeric (geographical/political) representation of the county in the state in which the provider practices.	VARCHAR2	10	0	N

Column Name	Description	Type	Length	Precision	Primary Key
IND_CARRIER_DENIED	Indicates if other insurance carrier denied the claim	CHAR	1	0	N
DTE_FINAL	A claim may be adjudicated by more than one Payer depending on the beneficiary/recipient coverage. Financial may run different cycles for different Payers on different dates. This date represents date on which the first financial cycle runs for Payers that finalize the claim.	NUMBER	8	0	N
DTE_FINAL_LAST_PAYER	A claim may be adjudicated by more than one Payer depending on the beneficiary/recipient coverage. Financial may run different cycles for different Payers on different dates. This date represents date on which the last financial cycle runs for Payers that finalize the claim.	NUMBER	8	0	N
CDE_NCPDP_CONFLICT	Reason for Service Code	CHAR	2	0	N
CDE_CLARIFICATION	Submission Clarification Code	CHAR	2	0	N

Column Name	Description	Type	Length	Precision	Primary Key
CDE_DISPENSE_STATUS	Code indicating the quantity dispensed is a partial fill or the completion of a partial fill. Used only in situations where inventory shortages do not allow the full quantity to be dispensed.	CHAR	1	0	N
CDE_ENC_STATUS	Code which indicates the status of the encounter in the system as a result of interChange editing. The values will be T - Threshold, I - Informational or P - paid.	CHAR	1	0	N
IND_ENCOUNTER	This field indicates if the claim is an encounter. Valid values Y or N.	CHAR	1	0	N
IND_PR_OVERRIDE	Override Billing Provider calculation	CHAR	1	0	N
IND_PR_OVERRIDE_REND	Override Rendering Provider calculation	CHAR	1	0	N

2.13.99 T_DENY_PHYS_DTL

Detailed information concerning medical/professional services that were not approved for payment (denied), encountered an error (edit/audit) or approved for payment in the system. When the physician header status is denied, all details associated with that header are written to this table, regardless of the detail's status.

Column Name	Description	Type	Length	Precision	Primary Key
SAK_CLAIM	System assigned key which uniquely identifies a claim in the system.	NUMBER	9	0	Y
NUM_DTL	The number of the detail on a claim record.	NUMBER	4	0	Y

Column Name	Description	Type	Length	Precision	Primary Key
SAK_PROV_PERF	System assigned key that uniquely identifies the provider enrollment tracking.	NUMBER	9	0	N
SAK_PROV_LOC_REND	Unique identifier for the provider service location.	NUMBER	9	0	N
DTE_FIRST_SVC	Date on which services were first performed for a recipient.	NUMBER	8	0	N
DTE_LAST_SVC	Date on which services were last performed for a recipient.	NUMBER	8	0	N
QTY_BILLED	Number of units of service that were provided.	NUMBER	6	2	N
QTY_ALLOWED	The number of services that are allowed for the detail.	NUMBER	6	2	N
IND_EMERGENCY	Indicates whether the service was provided as result of an emergency situation.	CHAR	1	0	N
IND_PREGNANCY	Indicates whether service is related to condition of being pregnant.	CHAR	1	0	N
SAK_PROCEDURE	System assigned key for a procedure code on a detail which indicates the service that was provided.	NUMBER	9	0	N
CDE_PROC_MOD	Code used to further define a procedure provided.	CHAR	2	0	N
CDE_MODIFIER_2	Code used to further define a procedure provided.	CHAR	2	0	N
CDE_MODIFIER_3	Code used to further define a procedure provided.	CHAR	2	0	N

Column Name	Description	Type	Length	Precision	Primary Key
AMT_BILLED	Amount of money requested for payment by a provider for services rendered to a recipient.	NUMBER	8	2	N
AMT_PAID	Amount sent to a provider for payment for services rendered to a recipient.	NUMBER	9	2	N
CDE_POS	Location where service was rendered.	CHAR	2	0	N
CDE_DIAG_TREAT_IND	Indicates which diagnosis (or diagnoses) for which services were provided. Valid values 1 for paper claims and 1-8 for electronic claims. One detail can be associated with a minimum of 1 diagnosis in the header.	CHAR	8	0	N
CDE_CLM_STATUS	Indicates the status of the detail in the MMIS system. This can be paid, suspended, or denied.	CHAR	1	0	N
IND_EPSDT_REF	Block 24J on the HCFA 1500. Defines EPSDT referral/treatment information. The valid values are as follows: YD - EPSDT, dental referral YV - EPSDT, vision referral YH - EPSDT, hearing referral YO - EPSDT, other referral AT - EPSDT, abnormal not treated AN - EPSDT, abnormal treated AR - EPSDT, abnormal	CHAR	2	0	N

Column Name	Description	Type	Length	Precision	Primary Key
CDE_EPSDT_FP	A code from the HCFA 1500 claim form block 24 H indicating EPSDT or Family Planning.	CHAR	1	0	N
CDE_PROV_SPEC	Code which indicates the scope of practice or operations of the rendering provider.	CHAR	3	0	N
IND_SYS_GENERATE	Indicates whether detail was added by system during claim's processing. Valid values Y - yes or N - no.	CHAR	1	0	N
IND_CLAIM_CHECK	This field indicates whether or not the detail has been through the ClaimCheck program.	CHAR	1	0	N
CDE_MODIFIER_4	Code used to further define a procedure provided. The fourth modifier field on the claim detail.	CHAR	2	0	N
amt_detail_TPL	This is the total amount paid by this payer for this detail. This is a derived field computed from the CAS segments on the 837 as follows. The total Provider Adjustment Amt (DA3-25.0) for a detail equals the sum of all the adjustment amounts inCAS03, 06, 09, 12, 15, and 18. Subtracting this amount form detail billed amounts yields the detail TPL amount.	NUMBER	9	2	N

Column Name	Description	Type	Length	Precision	Primary Key
NUM_DTL_REF	This sequence number points to the original detail or details submitted on the claim. For dental electronic claims this will point to the original detail submitted with more than one tooth number. Bundling. When two or more details are bundled into a single NEW detail, then the original bundled details point to the new bundling detail using a sequence number . The new bundling detail will have the system generated flag on Unbundling. This is the reverse of bundling. In this case a detail on a claim is broken out into two or more details that replace the original detail. The new details will have the system generated flag on and will point to the original unbundled detail.	NUMBER	4	0	N
SAK_PROV_REFERRING	System assigned key that uniquely identifies the provider enrollment tracking.	NUMBER	9	0	N
SAK_PROV_LOC_REF_1	Unique identifier for the provider service location.	NUMBER	9	0	N
SAK_PROV_REFERRING_2	System assigned key that uniquely identifies the provider enrollment tracking.	NUMBER	9	0	N
SAK_PROV_LOC_REF_2	Unique identifier for the provider service location.	NUMBER	9	0	N
IND_PR_OVERRIDE_REND	Override Rendering Provider calculation	CHAR	1	0	N

Column Name	Description	Type	Length	Precision	Primary Key
IND_PR_OVERRIDE_REF_1	Override Referring Provider 1calculation	CHAR	1	0	N
IND_PR_OVERRIDE_REF_2	Override Referring Provider 2 calculation	CHAR	1	0	N

2.13.100 T_DENY_PHYS_HDR

General information about medical/professional services that were not approved for payment (denied) in the MMIS. This includes claim types Medical, Transportation and Crossover Part B. All details associated with denied physician header are written to denied physician detail table.

Column Name	Description	Type	Length	Precision	Primary Key
SAK_CLAIM	System assigned key which uniquely identifies a claim in the system.	NUMBER	9	0	Y
SAK_RECIP	The system assigned internal key for a unique recipient.	NUMBER	9	0	N
PROV_BILLING	System assigned key that uniquely identifies the provider enrollment tracking.	NUMBER	9	0	N
SAK_PROV_LOC	Unique identifier for the provider service location	NUMBER	9	0	N
SAK_PROV_PERF	System assigned key that uniquely identifies the provider enrollment tracking.	NUMBER	9	0	N
SAK_PROV_LOC_PERF	Unique identifier for the provider service location	NUMBER	9	0	N
SAK_PROV_REFERRING	System assigned key that uniquely identifies the provider enrollment tracking.	NUMBER	9	0	N
SAK_PROV_LOC_REF_1	Unique identifier for the provider service location.	NUMBER	9	0	N

Column Name	Description	Type	Length	Precision	Primary Key
SAK_PROV_REFERRING_2	System assigned key that uniquely identifies the provider enrollment tracking.	NUMBER	9	0	N
SAK_PROV_LOC_REF_2	Unique identifier for the provider service location.	NUMBER	9	0	N
NUM_ICN	Number assigned to a claim processed in the system; used for control purposes. Unique number in format RRYYDDDBBBSSS: RR - region, YYDDD - Julian date, BBB - batch number, SSS - sequence number.	CHAR	13	0	N
NUM_DTL_TOTAL	Total number of details associated with the claim header.	NUMBER	4	0	N
CDE_CLM_STATUS	Indicates the status of a claim in the system.	CHAR	1	0	N
CDE_CLM_TXN_TYP	Code which further defines the status of a claim in the MMIS system. This is used to identify whether the claim processed to pay during the first cycle in which it was submitted or whether it took several cycles before the errors were corrected.	CHAR	1	0	N
CDE_CLM_TYPE	Code that specifies the type of claim record. The code for Physician claims is 'M' or Crossover Part B 'B'.	CHAR	1	0	N

Column Name	Description	Type	Length	Precision	Primary Key
NUM_PAT_ACCT	Identification for a recipient assigned by a provider and used in their system. This number is not required for processing (information only).	VARCHAR2	38	0	N
AMT_NET_BILLED	Amount remaining on a claim after payment has been made by all other sources (TPL).	NUMBER	8	2	N
TPL_AMT	Amount paid by third party for services.	NUMBER	8	2	N
DTE_BILLED	Date on which claim entered the system for processing.	NUMBER	8	0	N
AMT_BILLED	Amount requested by provider for services rendered.	NUMBER	8	2	N
DTE_FIRST_SVC	Date on which service was first provided (oldest date of all details).	NUMBER	8	0	N
DTE_LAST_SVC	Date on which service was last provided (latest date from all details).	NUMBER	8	0	N
DTE_TO_HOSP	Date on which recipient was discharged from inpatient hospital for which services are being billed.	NUMBER	8	0	N
DTE_FROM_HOSP	Date on which recipient was admitted to inpatient hospital for which services are being billed.	NUMBER	8	0	N

Column Name	Description	Type	Length	Precision	Primary Key
AMT_PATNT_LIAB	Amount of money that a recipient is responsible for paying for services rendered.	NUMBER	8	2	N
AMT_CO_PAY	Amount paid by recipient for service rendered.	NUMBER	7	2	N
IND_PROV_SIGN	Indicates whether the paper claim form was signed by the provider who performed the service.	CHAR	1	0	N
IND_ATTACHMENT	Indicator which is used to identify whether a claim is submitted with or without some type of supporting documentation.	CHAR	1	0	N
IND_ACCIDENT	Indicates whether the service performed was as a result of an accident.	CHAR	1	0	N
ID_CLERK	The ID of the clerk who has been assigned to work this claim.	CHAR	8	0	N
CDE_CERTIFICATE	Certification code that belongs to the primary medical provider (PMP).	CHAR	2	0	N
IND_ELECT_CLM	Indicator that identifies paper claims where the provider has been identified as a potential electronic biller.	CHAR	1	0	N
CDE_PROV_SPEC	Code which indicates the scope of practice or operations of the billing provider.	CHAR	3	0	N

Column Name	Description	Type	Length	Precision	Primary Key
CDE_PROV_TYPE	Code which indicates the provider type for which a provider is licensed.	CHAR	2	0	N
CDE_COUNTY	Numeric (geographical/political) representation of the county in the state in which the provider practices.	VARCHAR2	10	0	N
DTE_ACCIDENT	Date of accident found in block 14 on the HCFA-1500 claim form	NUMBER	8	0	N
Cde_Med_Rec_Num	The code representing the Medical Record Number.	VARCHAR2	30	0	N
cde_place_of_service	Code identifying the type of facility where services were performed; the first and second positions of the Uniform Bill Type code or the Place of Service code from the Electronic Media Claims National Standard Format.	CHAR	2	0	N
Cde_Claim_Frequency	CLM - Claims Frequency Code. Code specifying the reason for claim submission.	CHAR	1	0	N
IND_CARRIER_DENIED	Indicates if other insurance carrier denied the claim	CHAR	1	0	N

Column Name	Description	Type	Length	Precision	Primary Key
DTE_FINAL	A claim may be adjudicated by more than one Payer depending on the beneficiary/recipient coverage. Financial may run different cycles for different Payers on different dates. This date represents date on which the first financial cycle runs for Payers that finalize the claim.	NUMBER	8	0	N
DTE_FINAL_LAST_PAYER	A claim may be adjudicated by more than one Payer depending on the beneficiary/recipient coverage. Financial may run different cycles for different Payers on different dates. This date represents date on which the last financial cycle runs for Payers that finalize the claim.	NUMBER	8	0	N
CDE_ENC_STATUS	Code which indicates the status of the encounter in the system as a result of interChange editing. The values will be T - Threshold, I - Informational or P - paid.	CHAR	1	0	N
IND_ENCOUNTER	This field indicates if the claim is an encounter. Valid values Y or N.	CHAR	1	0	N
IND_PR_OVERRIDE	Override Billing Provider calculation	CHAR	1	0	N

Column Name	Description	Type	Length	Precision	Primary Key
IND_PR_OVERRIDE_PERF	Override Performing Provider calculation	CHAR	1	0	N
IND_PR_OVERRIDE_REF_1	Override Referring Provider 1 calculation	CHAR	1	0	N
IND_PR_OVERRIDE_REF_2	Override Referring Provider 2 calculation	CHAR	1	0	N

2.13.101 T_DENY_UB92_DTL

Detailed information concerning inpatient, outpatient, home health, crossover part A, crossover part C or nursing home (UB claim form) services that were not approved for payment (denied), encountered an error (edit/audit) or approved for payment in the system. When the UB header status is denied, all details associated with that header are written to this table, regardless of the detail's status.

Column Name	Description	Type	Length	Precision	Primary Key
SAK_CLAIM	System assigned key which uniquely identifies a claim in the system.	NUMBER	9	0	Y
NUM_DTL	The number of the detail on the claim.	NUMBER	4	0	Y
DTE_FIRST_SVC	The date on which a service was performed.	NUMBER	8	0	N
dte_last_svc	Service Line Date. Used to store the service line "To Date" where relevant.	NUMBER	8	0	N
CDE_REVENUE	This identifies a specific accommodation or ancillary service. Revenue codes are determined by HCFA.	NUMBER	4	0	N
SAK_PROCEDURE	System assigned key for a procedure code on a detail which indicates the service that was provided.	NUMBER	9	0	N
QTY_UNITS_BILLED	Number of units of service billed at the detail for a UB claim.	NUMBER	9	2	N

Column Name	Description	Type	Length	Precision	Primary Key
AMT_BILLED_UB92	Amount of money that was requested for payment by a provider for services that were rendered to a recipient. This amount represents the units billed multiplied by the rate billed.	NUMBER	9	2	N
CDE_CLM_STATUS	Code which indicates the status of the claim detail in the MMIS system. This status can be paid, suspended or denied.	CHAR	1	0	N
IND_SYS_GENERATE	Indicates whether detail was added by system during claim's processing. Valid values Y - yes or N - no.	CHAR	1	0	N
amt_detail_TPL	This is the total amount paid by this payer for this detail. This is a derived field computed from the CAS segments on the 837 as follows. The total Provider Adjustment Amt (DA3-25.0) for a detail equals the sum of all the adjustment amounts inCAS03, 06, 09, 12, 15, and 18. Subtracting this amount form detail billed amounts yields the detail TPL amount.	NUMBER	9	2	N

Column Name	Description	Type	Length	Precision	Primary Key
NUM_DTL_REF	This sequence number points to the original detail or details submitted on the claim. For dental electronic claims this will point to the original detail submitted with more than one tooth number. Bundling. When two or more details are bundled into a single NEW detail, then the original bundled details point to the new bundling detail using a sequence number . The new bundling detail will have the system generated flag on unbundling. This is the reverse of bundling. In this case a detail on a claim is broken out into two or more details that replace the original detail. The new details will have the system generated flag on and will point to the original unbundled detail.	NUMBER	4	0	N
SAK_PR_OTHER_2	System assigned key that uniquely identifies the provider enrollment tracking.	NUMBER	9	0	N
SAK_PROV_LOC_OTHER_2	System assigned key that uniquely identifies the provider service location.	NUMBER	9	0	N
IND_PR_OVERRIDE_OTHER_2	Override Other Provider 2 calculation	CHAR	1	0	N
IND_CLAIM_CHECK	Indicator showing if claim has been sent to claim check	CHAR	1	0	N

2.13.102 T_DENY_UB92_HDR

General information concerning inpatient, outpatient, home health, crossover part A, crossover part C or nursing home services that were not approved for payment (denied) in the MMIS.

Column Name	Description	Type	Length	Precision	Primary Key
SAK_CLAIM	System assigned key which uniquely identifies a claim in the system.	NUMBER	9	0	Y
SAK_RECIP	The system assigned internal key for a unique recipient.	NUMBER	9	0	N
PROV_BILLING	System assigned key that uniquely identifies the provider enrollment tracking.	NUMBER	9	0	N
SAK_PROV_LOC	Unique identifier for the provider service location	NUMBER	9	0	N
SAK_PR_FACILITY	System assigned key that uniquely identifies the provider enrollment tracking.	NUMBER	9	0	N
SAK_PROV_LOC_FA	System assigned key that uniquely identifies the provider service location.	NUMBER	9	0	N
SAK_PR_OTHER_2	System assigned key that uniquely identifies the provider enrollment tracking.	NUMBER	9	0	N
SAK_PROV_LOC_OTHER_2	System assigned key that uniquely identifies the provider service location.	NUMBER	9	0	N

Column Name	Description	Type	Length	Precision	Primary Key
NUM_ICN	Number assigned to a claim processed in the system; used for control purposes. Unique number in format RRYYDDDBBBSSS: RR - region, YYDDD - Julian date, BBB - batch number, SSS - sequence number.	CHAR	13	0	N
NUM_DTL_TOTAL	Total number of details associated with the claim header.	NUMBER	4	0	N
CDE_CLM_STATUS	Code which indicates the header status of the claim in the system.	CHAR	1	0	N
CDE_CLM_TXN_TYP	Code which further defines the status of a claim in the MMIS system. This is used to identify whether the claim processed to pay during the first cycle in which it was submitted or whether it took several cycles before the errors were corrected.	CHAR	1	0	N
CDE_CLM_TYPE	Code that specifies the type of claim record. The valid codes for UB claims are I - Inpatient, O - Outpatient, L - Nursing Home, H - Home Health, A - Part A Crossover and C - Part C Crossover.	CHAR	1	0	N

Column Name	Description	Type	Length	Precision	Primary Key
NUM_PAT_ACCT	Identification for a recipient assigned by a provider and used in their system. This number is not required for processing (information only).	VARCHAR2	38	0	N
CDE_TYPE_OF_BILL	Code which indicates the specific type of facility that is billing for services on a UB claim form.	CHAR	3	0	N
DTE_ADMISSION	Date that the recipient was admitted by the provider for inpatient care, outpatient services or start of care.	NUMBER	8	0	N
CDE_ADMIT_HOUR	The hour and minute during which the patient was admitted for inpatient or outpatient care.	CHAR	4	0	N
CDE_ADMIT_TYPE	Code which indicates the priority of the admission for inpatient or outpatient care.	CHAR	1	0	N
CDE_PATIENT_STATUS	Code which indicates the status of the recipient as of the ending service date of the period covered on a UB claim.	CHAR	2	0	N
AMT_PD_PAT_UB92	Amount of money that a recipient is responsible for paying for services that were rendered.	NUMBER	9	2	N

Column Name	Description	Type	Length	Precision	Primary Key
DTE_BILLED	Date on which the provider or billing service prepared the claim form to be submitted.	NUMBER	8	0	N
AMT_BILLED_UB92	Amount of money requested for payment by the provider for services performed.	NUMBER	9	2	N
DTE_FIRST_SVC	Date on which the statement period on the claim began.	NUMBER	8	0	N
DTE_LAST_SVC	Date on which the statement period on the claim ended.	NUMBER	8	0	N
ID_PROV_ATTEND	The number of the licensed physician who would be expected to certify and recertify the medical necessity of the services rendered and/or who has primary responsibility for the patient's medical care and treatment.	CHAR	15	0	N
ID_PROV_OTHER	License number of the physician who performed the principal procedure.	CHAR	15	0	N
ID_PROV_OTHER_2	License number of the second physician who performed the principal procedure.	CHAR	15	0	N
IND_PROV_SIGN	Indicates whether the paper claim form was signed by the provider who performed the service.	CHAR	1	0	N

Column Name	Description	Type	Length	Precision	Primary Key
ID_CLERK	The ID of the clerk who has been assigned to work this claim.	CHAR	8	0	N
AMT_DISP_SHARE	This field holds the result of the disproportionate share multiplied by the total allowed.	NUMBER	9	2	N
AMT_REIMBURSEMENT	Percentage that is used to modify the allowed amount. This percentage could cause more or less money to be paid to the provider.	NUMBER	9	2	N
NUM_DAYS_COVD	Indicates the total number of days for the statement period of the claim.	NUMBER	4	0	N
IND_ELECT_CLM	Indicator that identifies paper claims where the provider has been identified as a potential electronic biller.	CHAR	1	0	N
CDE_CERTIFICATE	This field represents the certification code for Managed Care recipients.	CHAR	2	0	N
AMT_OVERHEAD	Amt overhead is used for new home health pricing. Not used currently.	NUMBER	9	2	N
CDE_PROV_SPEC	Code which indicates the scope of practice or operations of the billing provider.	CHAR	3	0	N

Column Name	Description	Type	Length	Precision	Primary Key
CDE_PROV_TYPE	Code which indicates the provider type for which a provider is licensed.	CHAR	2	0	N
CDE_COUNTY	Numeric (geographical/political) representation of the county in the state in which the provider practices.	VARCHAR2	10	0	N
CDE_ADMIT_SOURCE	The source of admission code that is found in block 20 of the UB claim form for inpatient and LTC claims.	CHAR	1	0	N
Cde_Med_Rec_Num	The code for the Medical Record Number.	VARCHAR2	30	0	N
Cde_Claim_Frequency	CLM - Claims Frequency Code. Code specifying the reason for claim submission. Code specifying the frequency of the claim; this is the third position of the Uniform Billing Claim Form Bill Type.	CHAR	1	0	N
IND_CARRIER_DENIED	Indicates if other insurance carrier denied the claim.	CHAR	1	0	N
NUM_DAYS_NCOVD	Indicates the number of days not covered for the statement period of the claim.	NUMBER	4	0	N

Column Name	Description	Type	Length	Precision	Primary Key
DTE_FINAL	A claim may be adjudicated by more than one Payer depending on the beneficiary/recipient coverage. Financial may run different cycles for different Payers on different dates. This date represents date on which the first financial cycle runs for Payers that finalize the claim.	NUMBER	8	0	N
DTE_FINAL_LAST_PAYER	A claim may be adjudicated by more than one Payer depending on the beneficiary/recipient coverage. Financial may run different cycles for different Payers on different dates. This date represents date on which the last financial cycle runs for Payers that finalize the claim.	NUMBER	8	0	N
CDE_ENC_STATUS	Code which indicates the status of the encounter in the system as a result of interChange editing. The values will be T - Threshold, I - Informational or P - paid.	CHAR	1	0	N
IND_ENCOUNTER	This field indicates if the claim is an encounter. Valid values Y or N.	CHAR	1	0	N
IND_PR_OVERRIDE	Override Billing Provider calculation	CHAR	1	0	N

Column Name	Description	Type	Length	Precision	Primary Key
IND_PR_OVERRIDE_FACILITY	Override Facility Provider calculation	CHAR	1	0	N
IND_PR_OVERRIDE_OTHER_2	Override Other Provider 2 calculation	CHAR	1	0	N

2.13.103 T_DNTL_OTH_PYR_HDR

This table contains information received from the 837. The information is specific subscriber information for a previous payer on a claim. For additional information about the data, refer to the appropriate 837 HIPAA Implementation Guide

Column Name	Description	Type	Length	Precision	Primary Key
SAK_CLAIM	System assigned key which uniquely identifies a claim in the system.	NUMBER	9	0	Y
SAK_PAYER	Unique identifier for a Payer.	NUMBER	9	0	Y
qlf_othr_sub_DOB_fmt	Date Time Period Format Qualifier for Other Subscriber Date of Birth (DOB). Component of Other Subscriber Demographic Information.	CHAR	3	0	N
Dte_Other_Sub_DOB	Other Subscriber Date Of Birth	DATE	0	0	N
Cde_Other_Sub_Gender	Other Subscriber Gender	CHAR	1	0	N
ind_Ben_Assignment	OI - Assignment of Benefits Indicator	CHAR	1	0	N
ind_Release_of_Info	OI - Code identifying whether the provider has on file a signed statement by the patient authorizing release of medical data	CHAR	1	0	N
qlf_Claim_Adjud_Dt	Qualifier for Claim Adjudication Date DTP info	CHAR	3	0	N
qlf_Clm_Adjud_Dt_Fmt	Format Qualifier for the Claim Adjudication Date	CHAR	3	0	N
Dte_Clm_Adjudication	Claim Adjudication Date	DATE	0	0	N

2.13.104 T_EDI_INTERCHANGE

This table contains specific information on the submitter of an electronic transaction.

Column Name	Description	Type	Length	Precision	Primary Key
SAK_EDI_Interchange	System assigned key to uniquely identify a EDI record.	NUMBER	9	0	Y
Num_ISA_Control	A control number assigned by the interchange sender. The Interchange Control Number, ISA13, must be identical to the associated Interchange Trailer IEA02.	NUMBER	9	0	N
Num_GS_Control	Assigned number originated and maintained by the sender. The data interchange control number GS06 in this header must be identical to the same data element in the associated functional group trailer, GE02.	NUMBER	9	0	N
Num_ST_control	Identifying control number that must be unique within the transaction set functional group assigned by the originator for a transaction set. The Transaction Set Control Numbers in ST02 and SE02 must be identical. The number is assigned by the originator and must be unique within a functional group (GS-GE). The number also aids in error resolution research. For example, start with the number 0001 and increment from there. 524 Use the corresponding value in SE02 for this transaction set.	NUMBER	9	0	N

Column Name	Description	Type	Length	Precision	Primary Key
cde_Sender_ID	ISA06 - Interchange Sender ID. Identification code published by the sender for other parties to use as the receiver ID to route data to them; the sender always codes this value in the sender ID element. This is the identifier for the trading partner on the Trading Partner DB.	VARCHAR2	15	0	N
cde_Orig_Txn_ID	Reference information as defined for a particular Transaction Set or as specified by the Reference Identification Qualifier. BHT03 is the number assigned by the originator to identify the transaction within the originator's business application system. Use this reference identifier to identify the inventory file number of the tape or transmission assigned by the submitter's system.	VARCHAR2	30	0	N
Dte_Txn_Creation	Date expressed as MM/DD/CCYY. BHT04 is the date the transaction was created within the business application system. Use this date to identify the date on which the submitter created the file.	DATE	0	0	N

Column Name	Description	Type	Length	Precision	Primary Key
Time_Txn_Creation	Time expressed in 24-hour clock time as follows: HHMM, or HHMMSS, or HHMMSSD, or HHMMSSDD, where H = hours (00-23), M = minutes (00-59), S = integer seconds (00-59) and DD = decimal seconds; decimal seconds are expressed as follows: D = tenths (0-9)and DD = hundredths (00-99). BHT05 is the time the transaction was created within the business application system. Use this time to identify the time of day that the submitter created the file .	VARCHAR2	8	0	N

2.13.105 T_ENC_BATCH_PROCESS

Table contains summary information related to a batch of encounters. Information is first added by the encounter splitter process, summarized by claims engine and updated by other batch processes. Information on this table is displayed in the Encounter page/panels.

Column Name	Description	Type	Length	Precision	Primary Key
SAK_BATCH	System assigned key for the batch. This sak is the same as the SAK_UPLOAD in T_UPLOAD	NUMBER	9	0	Y
DTE_PAY_CYCLE	The payment cycle date of the batch.	DATE	0	0	N
ORIG_CLM_TOT	The total count of newday claims in the batch.	NUMBER	9	0	N
ORIG_CLM_CNT	The number of newday claims in the batch that have been processed.	NUMBER	9	0	N
BAD_CLM_CNT	The number of claims not processed due to internal errors in the batch.	NUMBER	9	0	N
AMT_BILLED	The total amount billed for the batch.	NUMBER	13	2	N

Column Name	Description	Type	Length	Precision	Primary Key
AMT_PAID	The total amount paid for the batch.	NUMBER	13	2	N
IND_BAD_STATUS	Indicator updated when bad claims have been manually resolved.	CHAR	1	0	N
CDE_BATCH_STATUS	The status of the batch.	CHAR	1	0	N
ID_CREATE	The ID of the creating user or process.	CHAR	8	0	N
DTE_CREATE	The date the record was created.	DATE	0	0	N
ID_UPDATE	The ID of the last update user or process.	CHAR	8	0	N
DTE_UPDATE	The date the record was last updated.	DATE	0	0	N
DTE_PROCESSED_ENC	Date the batch was processed by Medicaid.	DATE	0	0	N
CNT_THRESHOLD	The count of threshold errors on the batch.	NUMBER	9	0	N
CNT_INFORMATIONAL	The count of informational errors on the batch.	NUMBER	9	0	N

2.13.106 T_FINAL_PHYS_XOVER

The amounts used to price a Medicare Crossover Part B Claim. These amounts are sent from Medicare and determine how much Medicaid pays.

Column Name	Description	Type	Length	Precision	Primary Key
SAK_CLAIM	System assigned key which uniquely identifies a claim in the system.	NUMBER	9	0	Y
NUM_DTL	The number of the detail on a claim record. If zero (0), the information on the table row is for the claim header.	NUMBER	4	0	Y
AMT_ALWD_MCARE	The dollar amount allowed by Medicare for the services provided.	NUMBER	8	2	N

Column Name	Description	Type	Length	Precision	Primary Key
AMT_DEDUCT	The amount the recipient must pay before Medicare will begin to pay this claim.	NUMBER	8	2	N
AMT_COINSURANCE	Dollar amount which represents the recipient's coinsurance payment.	NUMBER	8	2	N
AMT_PSYCH	Amount Medicare has determined the recipient must pay for psychiatric services received.	NUMBER	9	2	N
AMT_PAID_MCARE	The dollar amount paid by Medicare for the services provided.	NUMBER	8	2	N
DTE_MCARE_PAID	The date that Medicare paid the claim.	NUMBER	8	0	N

2.13.107 T_FINAL_UB92_XOVER

The amounts used to price a Medicare Crossover Part A or C Claim. These amounts are sent from Medicare and determine how much Medicaid pays.

Column Name	Description	Type	Length	Precision	Primary Key
SAK_CLAIM	System assigned key which uniquely identifies a claim in the system.	NUMBER	9	0	Y
AMT_DEDUCT	The amount the recipient must pay before Medicare will begin to pay this claim.	NUMBER	8	2	N
AMT_COINSURANCE	Dollar amount which represents the recipient's coinsurance payment.	NUMBER	8	2	N
AMT_DEDUCT_BLOOD	The amount Medicare has determined that a recipient must pay for blood procedures performed.	NUMBER	8	2	N
DTE_MCARE_PAID	The date that Medicare paid the claim.	NUMBER	8	0	N
AMT_PAID_MCARE	The dollar amount paid by Medicare for the services provided	NUMBER	10	2	N

Column Name	Description	Type	Length	Precision	Primary Key
AMT_ALWD_MCARE	The dollar amount ALLOWED by Medicare for the services provided	NUMBER	10	2	N

2.13.108 T_FIN_FUND_CODE

This table contains that list of financial fund codes that are used in the system to categorize funds correctly in the financial reporting.

Column Name	Description	Type	Length	Precision	Primary Key
SAK_FUND_CODE	This is the unique system assigned key to the Financial Fund Codes.	NUMBER	9	0	Y
SAK_FIN_PAYER	The system assigned key that identifies a unique payer within interChange.	NUMBER	9	0	N
SAK_BUDGET	The system assigned key that identifies a unique budget with interChange.	NUMBER	9	0	N
CDE_FUND_CODE	This is the fund code that is used in financial reporting to correctly categorize funds (money).	CHAR	3	0	N
DSC_FUND	This is the description of the financial fund code that is used for reporting.	CHAR	50	0	N
DSC_FUND_LONG	This is the long description for the financial fund code. This field allows for longer explanation and description of the code that is not intended for reports.	VARCHAR2	4000	0	N
SAK_BUDGET_DISB	This is an optional field which identifies the budget to use to pay expenses under this fund code.	NUMBER	9	0	N
SAK_BUDGET_DEP	This is an optional field which identifies the budget to use to record deposits from outside entities.	NUMBER	9	0	N

Column Name	Description	Type	Length	Precision	Primary Key
SAK_BUDGET_RET	This is an optional field which identifies the budget to use to record returned system checks.	NUMBER	9	0	N
SAK_BUDGET_RCP	This is an optional field which identifies the budget to use to record recoupment dollars from outstanding receivables.	NUMBER	9	0	N
IND_STATE_TXFR	Indicates if this fund code is to suppress the physical payment in favor of an inter-State agency accounting entry transfer.	CHAR	1	0	N

2.13.109 T_FIN_PROCESS_EOMB

This table is a work table for the claims processed in a financial cycle. A sample is extracted for this table and the table is truncated. The REOMB are produced at the end of the month.

Column Name	Description	Type	Length	Precision	Primary Key
SAK_CLAIM	System assigned key which uniquely identifies a claim in the system.	NUMBER	9	0	Y
CDE_CLAIM_FORM	This identifies the type of claim form for this particular claim. Allowed values are : "INST" - Institutional claim. "PROF" - Professional claim. "DNTL" - Dental claim. "PHRM" - Pharmacy claim.	CHAR	1	0	N

2.13.110 T_HIST_DIRECTORY

Table containing history information related to claims. The information contained is summary information gathered from the claim header tables.

Column Name	Description	Type	Length	Precision	Primary Key
SAK_CLAIM	System assigned key which uniquely identifies a claim in the system.	NUMBER	9	0	Y
SAK_PROV	System assigned key that uniquely identifies the provider enrollment tracking.	NUMBER	9	0	N

Column Name	Description	Type	Length	Precision	Primary Key
SAK_RECIP	The system assigned internal key for a unique recipient.	NUMBER	9	0	N
NUM_ICN_FL	The unique internal control number associated with a claim.	NUMBER	13	0	N
DTE_FIRST_SVC	Date on which service was first provided (oldest date of all details).	NUMBER	8	0	N
DTE_TO_DATE	Date on which service was provided through (latest date from all details).	NUMBER	8	0	N
AMT_BILLED	Amount requested by provider for services rendered.	NUMBER	9	2	N
CDE_CLM_TYPE	The type of claim.	CHAR	1	0	N
CDE_CLM_STATUS	The status of the claim.	CHAR	1	0	N
CDE_PARTITION_ID	The database partition the claim is located on	CHAR	2	0	N
SAK_PROV_LOC	Unique identifier for the provider service location	NUMBER	9	0	N
DATE_PAID	A claim may be adjudicated by more than one Payer depending on the beneficiary/recipient coverage. Financial may run different cycles for different Payers on different dates. This date represents financial cycle run date that corresponds with the first financial cycle run for Payers that finalize the claim in that cycle.	NUMBER	8	0	N

Column Name	Description	Type	Length	Precision	Primary Key
DTE_FINAL_LAST_PAYER	A claim may be adjudicated by more than one Payer depending on the beneficiary/recipient coverage. Financial may run different cycles for different Payers on different dates. This date represents CHECK ISSUE date that corresponds with the last financial cycle run for Payers that finalize the claim in that cycle.	NUMBER	8	0	N

2.13.111 T_HIST_PART

Each row in this table identifies a schema partition of the Big History claim data.

Column Name	Description	Type	Length	Precision	Primary Key
NUM_PARTITION	A value used in ordering multiple occurrences.	NUMBER	4	0	Y
NAM_SCHEMA	This is the name of the schema to which a partition belongs. The use of a schema allows multiple physical database tables (and the columns on those tables) within the same database instance to have the same name.	CHAR	5	0	N
DTE_HIST_FROM	The from or low date in the range of History partition.	NUMBER	8	0	N
DTE_HIST_TO	The to or high date in the range of History partition.	NUMBER	8	0	N

2.13.112 T_HS_DIR_PART

Each row in this table identifies a schema partition of the Big History Claim Directory data.

Column Name	Description	Type	Length	Precision	Primary Key
NUM_PARTITION	A value used in ordering multiple occurrences.	NUMBER	4	0	Y

Column Name	Description	Type	Length	Precision	Primary Key
NAM_SCHEMA	This is the name of the schema to which a partition belongs. The use of a schema allows multiple physical database tables (and the columns on those tables) within the same database instance to have the same name.	CHAR	5	0	N
DTE_HIST_FROM	The from or low date in the range of History partition	NUMBER	8	0	N
DTE_HIST_TO	The to or high date in the range of History partition	NUMBER	8	0	N

2.13.113 T_INST_OTH_PYR_HDR

This table contains information received from the 837. The information is specific subscriber information for a previous payer on a claim. For additional information about the data refer to the appropriate 837 HIPAA Implementation Guide

Column Name	Description	Type	Length	Precision	Primary Key
SAK_CLAIM	System assigned key which uniquely identifies a claim in the system.	NUMBER	9	0	Y
SAK_PAYER	Unique identifier for a Payer.	NUMBER	9	0	Y
dte_adjudication	Date when this Payer adjudicated the claim	DATE	0	0	N
qlf_othr_sub_DOB_fmt	Date Time Period Format Qualifier for Other Subscriber Date of Birth (DOB). Component of Other Subscriber Demographic Information.	CHAR	3	0	N
dte_other_sub_dob	Other Subscriber Date of Birth (DOB). AKA Other Insured Date of Birth (DOB).	DATE	0	0	N
cde_other_sub_gender	Other Insured Gender Code. Valid values are F - - Female, M - Male, U - Unknown	CHAR	1	0	N
ind_benefits_assignment	Benefits Assignment Certification Indicator. Code indicating a Yes or No condition or response.	CHAR	1	0	N

Column Name	Description	Type	Length	Precision	Primary Key
cde_release_of_info	Release of Information Code. Code identifying whether the provider has on file a signed statement by the patient authorizing release of medical data to other organizations.	CHAR	1	0	N
qlf_adjudication_date	Date Time Qualifier for Claim Adjudication Date. Code specifying type of date or time, or both date and time.	CHAR	3	0	N
qlf_adjudication_dte_fmt	Date Time Period Format Qualifier for Claim Adjudication Date. Code indicating the date format, time format, or date and time format.	CHAR	3	0	N

2.13.114 T_LOCATION_NOTE

This table contains information relating to a note the user entered for a claim via online data corrections. This note transfers the claim between locations and assigns a new clerk ID (ID_REVIEWER) to the claim header when a record is created. A reply to the original note can also be entered

Column Name	Description	Type	Length	Precision	Primary Key
SAK_CLAIM	The sak of the claim that the note is related to.	NUMBER	9	0	Y
SAK_SHORT	A sequence number for the note.	NUMBER	4	0	Y
ID_CLERK	The id of the clerk that sent the note.	CHAR	8	0	N
CDE_LOC_FROM	The location that the note was sent from.	CHAR	2	0	N
CDE_LOC_TO	The location that the note was sent to.	CHAR	2	0	N
DTE_SENT	The date that the note was sent.	NUMBER	8	0	N
DTE_REPLY	The date that a reply was sent.	NUMBER	8	0	N
TME_SENT	The time that the note was sent.	NUMBER	8	0	N
TME_REPLY	The time of the message response	NUMBER	8	0	N

Column Name	Description	Type	Length	Precision	Primary Key
ID_REVIEWER	The id of the reviewer that the note was sent to.	CHAR	8	0	N
DSC_NOTE	The text of the note.	CHAR	256	0	N
DSC_REPLY	The text of the reply.	CHAR	256	0	N

2.13.115 T_MCARE_DEDUCTIBLE

This table contains the yearly Medicare deductible for Part A & Part C claims.

Column Name	Description	Type	Length	Precision	Primary Key
CDE_CLM_TYPE	Code that specifies the type of claim record which resides in the specified location.	CHAR	1	0	Y
DTE_YR_START	This field will be set to January 01 of the effected year.	NUMBER	8	0	Y
DTE_YR_END	This field will be set to December 31 of the effected year.	NUMBER	8	0	Y
DTE_EFFECTIVE	The first date to which the yearly deductible amount becomes effective.	NUMBER	8	0	Y
DTE_END	The last date to which the yearly deductible amount is effective.	NUMBER	8	0	N
CASH_DEDUCT	The maximum yearly cash deductible for the specified claim type.	NUMBER	6	2	N
IND_ACTIVE	Indicates whether the record is active or not. Only active rows are used in determining the Medicare deductible.	CHAR	1	0	N

2.13.116 T_MEDPOL_UB92

This table contains historical information about inpatient, outpatient, home health, crossover part A, crossover part C or nursing home services. This information is used to compare against claims currently processing in the MMIS. In the case of adjustments, the most recent adjustment (version of daughter) is used during processing. Mothers are indicated for deletion when adjustment (daughter) is released into the MMIS.

Column Name	Description	Type	Length	Precision	Primary Key
SAK_RECIP	The system assigned internal key for a unique recipient.	NUMBER	9	0	Y
SAK_CLAIM	System assigned key which uniquely identifies a claim in the system.	NUMBER	9	0	Y
NUM_DTL	The detail number of a claim record.	NUMBER	4	0	Y
SAK_PUB_HLTH	System assigned internal key for a recipient plan.	NUMBER	9	0	Y
CDE_CLM_TYPE	Code that specifies the type of claim record. The valid codes for UB claims are I - Inpatient, O - Outpatient, L - Nursing Home, A - Crossover Part A, C - Crossover Part C, and H - Home Health.	CHAR	1	0	N
PROV_BILLING	System assigned key that uniquely identifies the provider enrollment tracking.	NUMBER	9	0	N
SAK_PROV_LOC_BILL	System assigned key that uniquely identifies the provider service location.	NUMBER	9	0	N
DTE_FIRST_SVC	Date on which services were first performed for a recipient.	NUMBER	8	0	N
DTE_LAST_SVC	Date on which services were last performed for a recipient.	NUMBER	8	0	N
SAK_PROCEDURE	System assigned key for procedure code indicating service provide on a detail.	NUMBER	9	0	N

Column Name	Description	Type	Length	Precision	Primary Key
CDE_REVENUE	System assigned key used to uniquely identify a revenue code.	NUMBER	4	0	N
AMT_ALWD	Amount allowed by the specific program.	NUMBER	9	2	N
AMT_PAID	Amount paid for services rendered.	NUMBER	9	2	N
QTY_UNITS_ALWD	Quantity allowed for payment for services rendered to a recipient.	NUMBER	9	0	N
QTY_PAID	The quantity that was paid. This may be less than the allowed quantity. The reason for this difference is that cutbacks in the amount submitted are not always reflected in the units. For example, the allowed qty may be 3 and the unit allowed is $10.00 for a total allowed of $30.00. If there is a subsequent cut by $10.00 then the amount paid gets adjusted but the qty allowed remains the same.	NUMBER	9	0	N
QTY_AGE	Age of the recipient on first date of service	NUMBER	4	0	N
CDE_PROV_SPEC_1	Two byte integer value for the specialty of the billing provider. Highest value possible 256 in HEX format.	NUMBER	4	0	N
CDE_PATIENT_STATUS	Patient Status Code	CHAR	2	0	N
IND	Depicts whether the MEDPOL record is a claim, reversal, or adjustment.	CHAR	1	0	N
IND_PA	Indicates that claim was approved by using a PA.	CHAR	1	0	N
CDE_PROV_TYPE	Code which indicates the provider type for which a provider is licensed	CHAR	2	0	N

Column Name	Description	Type	Length	Precision	Primary Key
AMT_ENCOUNTER	This contains the amount for encounter services on the claim detail indicated by the detail number on the table..	NUMBER	9	2	N
DTE_ADMISSION	Date that the recipient was admitted by the provider for inpatient care, outpatient services or start of care.	NUMBER	8	0	N
CDE_MOD_1	Code used to further define a procedure provided	CHAR	2	0	N
CDE_MOD_2	Code used to further define a procedure provided	CHAR	2	0	N
CDE_MOD_3	Code used to further define a procedure provided	CHAR	2	0	N
CDE_MOD_4	Code used to further define a procedure provided	CHAR	2	0	N
SAK_FIN_PAYER	The system assigned key that identifies a unique payer within interChange.	NUMBER	9	0	N
SAK_ASNGMT_BENE	System assigned internal key for a recipient plan.	NUMBER	9	0	N

2.13.117 T_MEDPOL_UB92_DIAG

Association of diagnosis being treated by a specific diagnosis on a UB claim. In the case of adjustments, the most recent adjustment (version of mother) is used during processing. Mothers are indicated for deletion when adjustment (daughter) is released into the system.

Column Name	Description	Type	Length	Precision	Primary Key
SAK_CLAIM	System assigned key which uniquely identifies a claim in the system.	NUMBER	9	0	Y
CDE_DIAG_SEQ	The sequence number of the diagnosis on the claim that identifies whether the diagnosis is the admitting, primary, 'E' code, and so on.	CHAR	2	0	Y
SAK_DIAG	The system assigned key that uniquely identifies the diagnosis.	NUMBER	9	0	N

2.13.118 T_MPHX_DENTAL_DTL

This table contains historical detail information concerning dental services. This information is used to compare against current details processing in the MMIS. In the case of adjustments, the most recent adjustment (version of mother) is used during processing. Mothers are indicated for deletion when adjustment (daughter) is released into the MMIS.

Column Name	Description	Type	Length	Precision	Primary Key
SAK_CLAIM	System assigned key which uniquely identifies a claim in the system.	NUMBER	9	0	Y
NUM_DTL	The number of the detail on a claim record.	NUMBER	4	0	Y
SAK_RECIP	The system assigned internal key for a unique recipient.	NUMBER	9	0	N
SAK_PUB_HLTH	System assigned internal key for a recipient plan.	NUMBER	9	0	N
SAK_ASNGMT_BENE	System assigned internal key for a recipient plan.	NUMBER	9	0	N
SAK_FIN_PAYER	The system assigned key that identifies a unique payer within interChange.	NUMBER	9	0	N
DTE_FIRST_SVC	Date on which services were first performed for a recipient.	NUMBER	8	0	N
SAK_PROCEDURE	System assigned key for a procedure code on a detail which indicates the service that was provided.	NUMBER	9	0	N
CDE_PROV_SPEC_1	Specialty code of the rendering provider.	NUMBER	4	0	N
AMT_ALWD	Amount allowed by the specific program (Medicaid, 590, and so on.) for the procedure.	NUMBER	9	2	N
AMT_PAID	Amount paid for services rendered.	NUMBER	9	2	N
QTY_AGE	Age of the recipient on the first date of service.	NUMBER	4	0	N

Column Name	Description	Type	Length	Precision	Primary Key
CDE_TOOTH_NBR	Code which indicates the tooth on which a particular service was performed.	CHAR	2	0	N
PROV_BILLING	System assigned key that uniquely identifies the provider enrollment tracking.	NUMBER	9	0	N
CDE_POS	Code which indicates the location where service was rendered.	CHAR	2	0	N
QTY_ALLOWED	The number of units allowed for the service.	NUMBER	6	2	N
QTY_PAID	The quantity that was paid. This may be less than the allowed quantity. The reason for this difference is that cutbacks in the amount submitted are not always reflected in the units. For example, the allowed qty may be 3 and the unit allowed is $10.00 for a total allowed of $30.00. If there is a subsequent cut by $10.00 then the amount paid gets adjusted but the qty allowed remains the same.	NUMBER	9	0	N
CDE_SURFACE_1	Code which indicates the tooth surface of a particular tooth.	CHAR	1	0	N
CDE_SURFACE_2	Code which indicates the tooth surface of a particular tooth.	CHAR	1	0	N
CDE_SURFACE_3	Code which indicates the tooth surface of a particular tooth.	CHAR	1	0	N
CDE_SURFACE_4	Code which indicates the tooth surface of a particular tooth.	CHAR	1	0	N
CDE_SURFACE_5	Code which indicates the tooth surface of a particular tooth.	CHAR	1	0	N

Column Name	Description	Type	Length	Precision	Primary Key
CDE_QUADRANT	The first quadrant of the mouth that the procedure on the claim is related to. This could also indicate other mouth areas such as mandibular or maxillary.	CHAR	2	0	N
SAK_PROV_PERF	System assigned key that uniquely identifies the provider enrollment tracking.	NUMBER	9	0	N
IND	Depicts whether the MEDPOL record is a claim, reversal, or adjustment.	CHAR	1	0	N
IND_PA	Indicates that claim was paid using a PA.	CHAR	1	0	N
CDE_QUADRANT_2	The second quadrant of the mouth that the procedure on the claim is related to. This could also indicate other mouth areas such as mandibular or maxillary.	CHAR	2	0	N
CDE_QUADRANT_3	The third quadrant of the mouth that the procedure on the claim is related to. This could also indicate other mouth areas such as mandibular or maxillary.	CHAR	2	0	N
CDE_QUADRANT_4	The fourth quadrant of the mouth that the procedure on the claim is related to. This could also indicate other mouth areas such as mandibular or maxillary.	CHAR	2	0	N
CDE_QUADRANT_5	The fifth quadrant of the mouth that the procedure on the claim is related to. This could also indicate other mouth areas such as mandibular or maxillary.	CHAR	2	0	N
CDE_PROV_TYPE	Code which indicates the provider type for which a provider is licensed	CHAR	2	0	N

Column Name	Description	Type	Length	Precision	Primary Key
AMT_ENCOUNTER	This contains the amount for encounter services on the claim detail indicated by the detail number on the table..	NUMBER	9	2	N
CDE_MOD_1	Code used to further define a procedure provided	CHAR	2	0	N
CDE_MOD_2	Code used to further define a procedure provided	CHAR	2	0	N
CDE_MOD_3	Code used to further define a procedure provided	CHAR	2	0	N
CDE_MOD_4	Code used to further define a procedure provided	CHAR	2	0	N
SAK_PROV_LOC_PERF	Unique identifier for the provider service location	NUMBER	9	0	N
SAK_PROV_LOC_BILL	System assigned key that uniquely identifies the provider service location.	NUMBER	9	0	N

2.13.119 T_MPHX_INPT_HDR

Contains information about the header portion of a paid UB claim that is used in auditing.

Column Name	Description	Type	Length	Precision	Primary Key
SAK_CLAIM	System assigned key which uniquely identifies a claim in the system.	NUMBER	9	0	Y
CDE_CLM_TYPE	Code that specifies the type of claim record. The valid codes for UB claims are A - Crossover Part A, C - Crossover Part C, H - Home Health, I - Inpatient, L - Nursing Home (Long Term Care), and O - Outpatient.	CHAR	1	0	N
CDE_TYPE_OF_BILL	Indicates the specific type of facility that is billing for services on a UB claim form.	CHAR	3	0	N
SAK_RECIP	System assigned key that uniquely identifies a recipient in the MMIS system.	NUMBER	9	0	N

Column Name	Description	Type	Length	Precision	Primary Key
PROV_BILLING	System assigned key that uniquely identifies the provider billing the claim.	NUMBER	9	0	N
SAK_PROV_LOC	Unique identifier for the provider service location	NUMBER	9	0	N
DTE_ADMISSION	Date on which the recipient was admitted to the hospital.	NUMBER	8	0	N
DTE_DISCHARGE	This is the date that the recipient was discharged from an institution. We obtain this date from an occurrence code that has a value of '50'.	NUMBER	8	0	N
CDE_PROV_SPEC_1	Two byte integer value for the specialty of the billing provider.	NUMBER	4	0	N
AMT_PAID	The amount of money we will pay to the submitter of the claim.	NUMBER	9	2	N
QTY_AGE	Age of the recipient at the time that the service was rendered.	NUMBER	4	0	N

2.13.120 T_MPHX_INPT_HDR2

Contains information about the header portion of a paid UB claim (that does not have a discharge date) that is used in auditing.

Column Name	Description	Type	Length	Precision	Primary Key
SAK_CLAIM	System assigned key which uniquely identifies a claim in the system.	NUMBER	9	0	Y
CDE_CLM_TYPE	Code that specifies the type of claim record. The valid codes for UB claims are A - Crossover Part A, C - Crossover Part C, H - Home Health, I - Inpatient, L - Nursing Home (Long Term Care), and O - Outpatient.	CHAR	1	0	N
CDE_TYPE_OF_BILL	Indicates the specific type of facility that is billing for services on a UB claim form.	CHAR	3	0	N

Column Name	Description	Type	Length	Precision	Primary Key
SAK_RECIP	System assigned key that uniquely identifies a recipient in the MMIS system.	NUMBER	9	0	N
PROV_BILLING	System assigned key that uniquely identifies the provider billing the claim.	NUMBER	9	0	N
SAK_PROV_LOC	Unique identifier for the provider service location	NUMBER	9	0	N
DTE_ADMISSION	Date on which the recipient was admitted to the hospital.	NUMBER	8	0	N
CDE_PROV_SPEC_1	Two byte integer value for the specialty of the billing provider.	NUMBER	4	0	N
AMT_PAID	The amount of money we will pay to the submitter of the claim.	NUMBER	9	2	N
QTY_AGE	Age of the recipient at the time that the service was rendered.	NUMBER	4	0	N

2.13.121 T_MPHX_MISC

This table is used for duplicate audits. It holds additional fields that affect a minimal number of claims calling for usage in a separate table. It is written to in the claims engine. All attributes hold the history portion of the duplicate audit comparisons.

Column Name	Description	Type	Length	Precision	Primary Key
SAK_CLAIM	System assigned key which uniquely identifies a claim in the system.	NUMBER	9	0	Y
NUM_DTL	The number of the detail on a claim record.	NUMBER	4	0	Y
SAK_PA	This is the system assigned key for the Prior Authorization record.	NUMBER	9	0	Y
NUM_PAT_ACCT	Identification for a recipient assigned by a provider and used in their system. This number is not required for processing (information only). See CDE_MISC and QLF_MISC_TYPE columns in T_CLM_MISC table.	VARCHAR2	38	0	N

Column Name	Description	Type	Length	Precision	Primary Key
CDE_ADMIT_HOUR	The hour during which the patient was admitted for inpatient or outpatient care in HHMM format.	CHAR	4	0	N
CDE_PICKUP_TIME	The hour during which the patient was picked up for transportation-based physician claims. HHMM format.	CHAR	4	0	N
ID_SCHOOL	A code used for physician group therapy services.	VARCHAR2	11	0	N
ID_EMPLOYEE	A code used for physician group therapy services.	VARCHAR2	11	0	N
NUM_INDV_GROUP	Number of individuals in a group. Used for group therapy services.	NUMBER	3	0	N

2.13.122 T_MPHX_PHRM_DTL

This table contains historical detail information about drug services (pharmacy and compound drug). This information is used to compare against current details processing in the MMIS. In the case of adjustments, the most recent adjustment (version of mother) is used during processing. Mothers are indicated for deletion when adjustment (daughter) is released into the MMIS.

Column Name	Description	Type	Length	Precision	Primary Key
SAK_RECIP	The system assigned internal key for a unique recipient.	NUMBER	9	0	Y
SAK_CLAIM	System assigned key which uniquely identifies a claim in the system.	NUMBER	9	0	Y
NUM_DTL	The number of the detail on a claim record.	NUMBER	4	0	Y
SAK_PUB_HLTH	System assigned internal key for a recipient plan.	NUMBER	9	0	Y
SAK_ASNGMT_BENE	System assigned internal key for a recipient plan.	NUMBER	9	0	N
SAK_DRUG	System assigned key for a unique drug	NUMBER	9	0	N

Column Name	Description	Type	Length	Precision	Primary Key
SAK_FIN_PAYER	The system assigned key that identifies a unique payer within interChange.	NUMBER	9	0	N
QTY_DISPENSE	The number of units of a drug dispensed to a recipient.	NUMBER	10	3	N
NUM_DAY_SUPPLY	Number of days a prescribed drug should last a recipient.	NUMBER	9	0	N
DTE_DISPENSE	Date pharmacy dispensed a drug to a recipient.	NUMBER	8	0	N
ID_PROV_PRESCRB	Provider who prescribed a drug to be administered to a recipient. This does not have to be an enrolled provider.	CHAR	15	0	N
PROV_BILLING	System assigned key that uniquely identifies the provider enrollment tracking.	NUMBER	9	0	N
NUM_PRSCRIP	Prescription number assigned by a pharmacy to a drug dispensed to a recipient.	CHAR	7	0	N
AMT_NDC_PROFEE	Fee paid for dispensing the drug.	NUMBER	7	2	N
AMT_ALWD	Amount allowed for services rendered.	NUMBER	9	2	N
AMT_TOT_REIMB	Total amount reimbursed to the provider.	NUMBER	10	2	N
IND	Depicts whether the MEDPOL record is a claim, reversal, or adjustment.	CHAR	1	0	N
CDE_LIMIT	Value 'P' show PA was used to process this claim	CHAR	1	0	N
IND_PA	Indicates that claim was paid using a PA.	CHAR	1	0	N

Column Name	Description	Type	Length	Precision	Primary Key
AMT_ENCOUNTER	This contains the amount for encounter services on the claim detail indicated by the detail number on the table..	NUMBER	9	2	N
SAK_PROV_LOC_BILL	System assigned key that uniquely identifies the provider service location.	NUMBER	9	0	N
CDE_DISPENSE_STATUS	Code indicating the quantity dispensed is a partial fill or the completion of a partial fill. Used only in situations where inventory shortages do not allow the full quantity to be dispensed.	CHAR	1	0	N

2.13.123 T_MPHX_PHYS_DTL

Historical detail information concerning medical/professional services that is used to compare against current details processing in the system. In the case of adjustments, the most recent adjustment (version of mother) is used during processing. Mothers are indicated for deletion when adjustment (daughter) is released into the system.

Column Name	Description	Type	Length	Precision	Primary Key
SAK_RECIP	The system assigned internal key for a unique recipient.	NUMBER	9	0	Y
SAK_CLAIM	System assigned key which uniquely identifies a claim in the system.	NUMBER	9	0	Y
NUM_DTL	The number of the detail on a claim record.	NUMBER	4	0	Y
SAK_PUB_HLTH	System assigned internal key for a recipient plan.	NUMBER	9	0	Y
SAK_PROV_PERF	System assigned key that uniquely identifies the provider enrollment tracking.	NUMBER	9	0	N
SAK_FIN_PAYER	The system assigned key that identifies a unique payer within interChange.	NUMBER	9	0	N

Column Name	Description	Type	Length	Precision	Primary Key
SAK_ASNGMT_BENE	System assigned internal key for a recipient plan.	NUMBER	9	0	N
DTE_FIRST_SVC	Date on which services were first performed for a recipient.	NUMBER	8	0	N
DTE_LAST_SVC	Date on which services were last performed for a recipient.	NUMBER	8	0	N
SAK_PROCEDURE	System assigned key for procedure code indicating service provide on a detail.	NUMBER	9	0	N
CDE_PROC_MOD	Code used to further define a procedure provided.	CHAR	2	0	N
CDE_MODIFIER_2	Code used to further define a procedure provided.	CHAR	2	0	N
CDE_MODIFIER_3	Code used to further define a procedure provided.	CHAR	2	0	N
CDE_POS	Location where service was rendered.	CHAR	2	0	N
QTY_ALLOWED	Quantity allowed for payment for services rendered to a recipient.	NUMBER	6	2	N
QTY_PAID	The quantity that was paid. This may be less than the allowed quantity. The reason for this difference is that cutbacks in the amount submitted are not always reflected in the units. For example, the allowed qty may be 3 and the unit allowed is $10.00 for a total allowed of $30.00. If there is a subsequent cut by $10.00 then the amount paid gets adjusted but the qty allowed remains the same.	NUMBER	9	0	N

Column Name	Description	Type	Length	Precision	Primary Key
CDE_PROV_SPEC_1	Two byte integer value for the specialty of the rendering provider. Highest value possible 256 in HEX format.	NUMBER	4	0	N
AMT_ALWD	Amount allowed by the specific program.	NUMBER	9	2	N
AMT_PAID	Amount paid for services rendered.	NUMBER	9	2	N
QTY_AGE	Age of recipient on first date of service	NUMBER	4	0	N
CDE_CLM_TYPE	Code that specifies the type of claim record. The code for Physician claims is 'M' or Crossover Part B 'B'.	CHAR	1	0	N
IND_EMERGENCY	Indicates whether the procedure performed was the result of an emergency.	CHAR	1	0	N
CDE_MODIFIER_4	Code used to further define a procedure provided.	CHAR	2	0	N
QTY_BILLED	Quantity billed for services rendered to a recipient.	NUMBER	6	2	N
IND	Depicts whether the MEDPOL record is a claim, reversal, or adjustment.	CHAR	1	0	N
IND_PA	Indicates that claim was paid using a PA.	CHAR	1	0	N
CDE_PROV_TYPE	Code which indicates the provider type for which a provider is licensed	CHAR	2	0	N
AMT_ENCOUNTER	This contains the amount for encounter services on the claim detail indicated by the detail number on the table..	NUMBER	9	2	N
SAK_PROV_LOC_PERF	Unique identifier for the provider service location	NUMBER	9	0	N

2.13.124 T_MPHX_PH_DIAG

Association of diagnosis being treated by a specific diagnosis on physician claim detail. In the case of adjustments, the most recent adjustment (version of mother) is used during processing. Mothers are indicated for deletion when adjustment (daughter) is released into the system.

Column Name	Description	Type	Length	Precision	Primary Key
SAK_DIAG	The system assigned key for the diagnosis.	NUMBER	9	0	Y
SAK_CLAIM	System assigned key which uniquely identifies a claim in the system.	NUMBER	9	0	Y
NUM_DTL	The number of the detail on a claim record.	NUMBER	4	0	Y
CDE_DIAG_SEQ	Indicates if the diagnosis is primary, secondary, third, or fourth on paper claims. Electronic claims will allow up to 8 diagnosis codes.	CHAR	1	0	N

2.13.125 T_MPHX_XOVER

This table contains attributes related to both physician an UB crossovers. These attributes are used to support duplicate audit criteria.

Column Name	Description	Type	Length	Precision	Primary Key
SAK_CLAIM	System assigned key which uniquely identifies a claim in the system.	NUMBER	9	0	Y
NUM_DTL	The number of the detail on a claim record. If zero (0), the information on the table row is for the claim header.	NUMBER	4	0	Y
AMT_DEDUCT	The amount the recipient must pay before Medicare will begin to pay this claim.	NUMBER	8	2	N
AMT_COINSURANCE	Dollar amount which represents the recipient's coinsurance payment.	NUMBER	8	2	N

2.13.126 T_PARTY_IDENTIFIER

A PARTY is a person or organization that is of interest to the business. Some examples of PARTY types are PAYER, SUBSCRIBER, PATIENT, PROVIDER. A PARTY IDENTIFIER is one of the possible identifiers for the PARTY.

Column Name	Description	Type	Length	Precision	Primary Key
SAK_PARTY_IDENTIFIER	Unique identifier for a Payer.	NUMBER	9	0	Y
CDE_PARTY_ID	Unique identifier for the entity type specified by the qualifier. INDUSTRY: Other Payer Primary Identifier ALIAS: Other Payer Primary Identification Number SYNTAX: P0809 NSF Reference: DA0-07.0 This number must be identical to SVD01 (Loop ID-2430) for COB.	VARCHAR2	80	0	N
QLF_ID_TYPE	Indicates the identification code qualifier. This is the value in NM108. This code tells the domain of the value in CDE_PAYER_ID. This code refers to a list of values used to identify the entity. Valid codes are: PI - Payer Identification XV - CMS (old HCFA) National Plan ID. Required if the National Plan ID is mandated for use.	CHAR	2	0	N

2.13.127 T_PA_ITEM_DTL_XREF

This represents the cross-reference between a claim detail and a Prior Authorization line-item. An adjustment (daughter) causes the association between a mother's detail and PA line item to change to an inactive status (not included in claims processing). Only cross-reference records with an active status are used for claims processing.

Column Name	Description	Type	Length	Precision	Primary Key
SAK_CLAIM	System assigned key which uniquely identifies a claim in the system.	NUMBER	9	0	Y
NUM_DTL	The number of the detail on a claim record.	NUMBER	4	0	Y
SAK_FIN_PAYER	The system assigned key that identifies a unique payer within interChange.	NUMBER	9	0	N
SAK_PA	This is the system assigned key for the service/prior authorization record.	NUMBER	9	0	N
NUM_PA_LINE_ITEM	This represents the service prior authorization line-item number for the PA record. Each PA record may have up to 10 line-items.	CHAR	2	0	N
QTY_UNT_SVC_USD	This indicates the number of services that has been used to date for service/prior authorization line item for a particular claim detail.	NUMBER	9	0	N
AMT_PA_USED	This indicates the dollar amount that has been used to date for a service/prior authorization line item for a particular claim detail.	NUMBER	9	2	N
CDE_STATUS1	Indicates whether the cross-reference record is active or not. It will become inactive only after an adjustment to the claim is released. Only active rows are used in accumulating PA used amounts and units.	CHAR	1	0	N

2.13.128 T_PBM_PHARM_EXTRACT

PBM extract and receipt of claims from the PBM trading partner.

Column Name	Description	Type	Length	Precision	Primary Key
num_icn	Claim ICN Format: RRYYDDDBBBSSS RR=region, YYDDD=Julian date, BBB=batch, SSS=sequence number	CHAR	13	0	Y
SAK_CLAIM	System assigned key which uniquely identifies a claim in the system.	NUMBER	9	0	N
cde_clm_status	The status of the claim (P - paid, D - denied)	CHAR	1	0	N
dte_extract	The date the claim was extracted and sent to the PBM trading partner.	NUMBER	8	0	N
dte_return	The date the claim was returned from the PBM trading partner	NUMBER	8	0	N
SAK_FIN_PAYER	The system assigned key that identifies a unique payer within interChange.	NUMBER	9	0	N

2.13.129 T_PD_DNTL_DTL

Detailed information concerning dental services that have been paid in the MMIS.

Column Name	Description	Type	Length	Precision	Primary Key
SAK_CLAIM	System assigned key which uniquely identifies a claim in the system.	NUMBER	9	0	Y
NUM_DTL	The number of the detail on a claim record.	NUMBER	4	0	Y
SAK_PROV_PERF	System assigned key that uniquely identifies the provider enrollment tracking.	NUMBER	9	0	N
SAK_PROV_LOC_PERF	Unique identifier for the provider service location	NUMBER	9	0	N

Column Name	Description	Type	Length	Precision	Primary Key
SAK_PROCEDURE	System assigned key for a procedure code on a detail which indicates the service that was provided.	NUMBER	9	0	N
DTE_FIRST_SVC	Date on which services were first performed for a recipient.	NUMBER	8	0	N
AMT_BILLED	Amount of money requested by a provider for payment for services rendered to a recipient.	NUMBER	8	2	N
AMT_ALWD	Amount approved to pay for services provided to a recipient.	NUMBER	9	2	N
AMT_PAID	Amount paid for services rendered.	NUMBER	9	2	N
AMT_CO_PAY	Amount paid by recipient for services rendered.	NUMBER	7	2	N
CDE_CLM_STATUS	Indicates the status of the detail in the MMIS system. This can be paid or denied.	CHAR	1	0	N
CDE_TOOTH_NBR	Code which indicates the tooth on which a particular service was performed.	CHAR	2	0	N
QTY_BILLED	The number of units billed for the service. All claims will plug a '1' here. Claims converted from the MMIS may have a value greater than '1'.	NUMBER	6	2	N
QTY_ALLOWED	The number of units allowed for the service.	NUMBER	6	2	N
CDE_QUADRANT	The quadrant of the mouth that the procedure on the claim is related to.	CHAR	2	0	N

Column Name	Description	Type	Length	Precision	Primary Key
CDE_PROV_SPEC	Code which indicates the scope of practice or operations of the rendering provider.	CHAR	3	0	N
IND_SYS_GENERATE	Indicates whether detail was added by system during claim's processing. Valid values Y - yes or N - no.	CHAR	1	0	N
amt_detail_TPL	This is the total amount paid by other payers for this detail.	NUMBER	9	2	N
NUM_DTL_REF	This sequence number points to the original detail or details submitted on the claim. For dental electronic claims this will point to the original detail submitted with more than one tooth number. Bundling. When two or more details are bundled into a single NEW detail, then the original bundled details point to the new bundling detail using a sequence number . The new bundling detail will have the system generated flag on unbundling. This is the reverse of bundling. In this case a detail on a claim is broken out into two or more details that replace the original detail. The new details will have the system generated flag on and will point to the original unbundled detail.	NUMBER	4	0	N
cde_place_of_service	The place of service code representing the location where the dental treatment was rendered.	CHAR	2	0	N

Column Name	Description	Type	Length	Precision	Primary Key
CDE_DIAG_TREAT_IND	Indicates which diagnosis (or diagnoses) for which services were provided. Valid values are 1,2,3,4,5,6,7,8. One detail can be associated with a minimum of 1 diagnosis in the header or maximum of 8 diagnoses in the header for non-transportation claims only.	CHAR	8	0	N
IND_PR_OVERRIDE_PERF	Override Performing Provider calculation	CHAR	1	0	N

2.13.130 T_PD_DNTL_HDR

General information about dental services that have been paid in the system.

Column Name	Description	Type	Length	Precision	Primary Key
SAK_CLAIM	System assigned key which uniquely identifies a claim in the system.	NUMBER	9	0	Y
SAK_RECIP	The system assigned internal key for a unique recipient.	NUMBER	9	0	N
PROV_BILLING	System assigned key that uniquely identifies the provider enrollment tracking.	NUMBER	9	0	N
SAK_PROV_LOC	Unique identifier for the provider service location	NUMBER	9	0	N
SAK_PROV_PERF	System assigned key that uniquely identifies the provider enrollment tracking.	NUMBER	9	0	N
SAK_PROV_LOC_PERF	Unique identifier for the provider service location	NUMBER	9	0	N

Column Name	Description	Type	Length	Precision	Primary Key
SAK_PROV_REFERRING	System assigned key that uniquely identifies the provider enrollment tracking.	NUMBER	9	0	N
SAK_PROV_LOC_REF_1	Unique identifier for the provider service location.	NUMBER	9	0	N
SAK_PROV_REFERRING_2	System assigned key that uniquely identifies the provider enrollment tracking.	NUMBER	9	0	N
SAK_PROV_LOC_REF_2	Unique identifier for the provider service location.	NUMBER	9	0	N
NUM_ICN	Number assigned to a claim processed in the system. This is used for control purposes.	CHAR	13	0	N
NUM_DTL_TOTAL	Total number of details associated with the claim header.	NUMBER	4	0	N
CDE_CLM_STATUS	Indicates the status of a claim in the system.	CHAR	1	0	N
CDE_CLM_TXN_TYP	Code which further defines the status of a claim in the MMIS system. This is used to identify whether the claim processed to pay during the first cycle in which it was submitted or whether it took several cycles before the errors were corrected.	CHAR	1	0	N
CDE_CLM_TYPE	Code that specifies the type of claim record. The code for Dental claims is 'D'.	CHAR	1	0	N

Column Name	Description	Type	Length	Precision	Primary Key
NUM_PAT_ACCT	Identification for a recipient assigned by a provider and used in their system. This number is not required for processing (information only).	VARCHAR2	38	0	N
AMT_NET_BILLED	Amount remaining on a claim after payment has been made by all other sources (TPL).	NUMBER	8	2	N
TPL_AMT	Amount paid by third party for services.	NUMBER	8	2	N
DTE_BILLED	Date on which the provider or billing service prepared the claim form to be submitted.	NUMBER	8	0	N
AMT_BILLED	Amount requested by provider for services rendered.	NUMBER	8	2	N
AMT_PAID	Amount sent to a provider for payment of services rendered to a recipient.	NUMBER	9	2	N
DTE_FIRST_SVC	Date on which service was first provided (oldest date of all details).	NUMBER	8	0	N
DTE_LAST_SVC	Last date on which service was provided to a recipient (most recent date of all details).	NUMBER	8	0	N
AMT_PATNT_LIAB	Amount of money that recipient is responsible for paying for services rendered.	NUMBER	8	2	N

Column Name	Description	Type	Length	Precision	Primary Key
CDE_POS	Code that indicates where the dental services were rendered.	CHAR	2	0	N
IND_EMERGENCY	Indicates whether the service was provided as a result of an emergency situation.	CHAR	1	0	N
IND_ACCIDENT	Indicates whether the service performed was as a result of an accident.	CHAR	1	0	N
IND_PROV_SIGN	Indicates whether the paper claim form was signed by the provider who performed the service.	CHAR	1	0	N
IND_ANOTHER_PLAN	Indicates whether the recipient on the claim has coverage under another company's insurance plan.	CHAR	1	0	N
ID_CLERK	The ID of the clerk who has been assigned to work this claim.	CHAR	8	0	N
IND_ELECT_CLM	Indicator that identifies paper claims where the provider has been identified as a potential electronic biller.	CHAR	1	0	N
CDE_PROV_SPEC	Code which indicates the scope of practice or operations of the billing provider.	CHAR	3	0	N
CDE_PROV_TYPE	Code which indicates the provider type for which a provider is licensed.	CHAR	2	0	N

Column Name	Description	Type	Length	Precision	Primary Key
CDE_COUNTY	Numeric (geographical/political) representation of the county in the state in which the provider practices.	VARCHAR2	10	0	N
Cde_Claim_Frequency	CLM - Claims Frequency Code. Code specifying the reason for claim submission. Code specifying the frequency of the claim; this is the third position of the Uniform Billing Claim Form Bill Type.	CHAR	1	0	N
IND_CARRIER_DENIED	Indicates if other insurance carrier denied the claim	CHAR	1	0	N
CDE_EPSDT_FP	A code from the ADA 200 claim form indicating EPSDT.	CHAR	1	0	N
DTE_FINAL	A claim may be adjudicated by more than one Payer depending on the beneficiary/recipient coverage. Financial may run different cycles for different Payers on different dates. This date represents date on which the first financial cycle runs for Payers that finalize the claim.	NUMBER	8	0	N

Column Name	Description	Type	Length	Precision	Primary Key
DTE_FINAL_LAST_PAYER	A claim may be adjudicated by more than one Payer depending on the beneficiary/recipient coverage. Financial may run different cycles for different Payers on different dates. This date represents date on which the last financial cycle runs for Payers that finalize the claim.	NUMBER	8	0	N
CDE_ENC_STATUS	Code which indicates the status of the encounter in the system as a result of interChange editing. The values will be T - Threshold, I - Informational or P - paid.	CHAR	1	0	N
IND_ENCOUNTER	This field indicates if the claim is an encounter. Valid values Y or N.	CHAR	1	0	N
IND_PR_OVERRIDE	Override Billing Provider calculation	CHAR	1	0	N
IND_PR_OVERRIDE_PERF	Override Performing Provider calculation	CHAR	1	0	N
IND_PR_OVERRIDE_REF_1	Override Referring Provider 1 calculation	CHAR	1	0	N
IND_PR_OVERRIDE_REF_2	Override Referring Provider 2 calculation	CHAR	1	0	N

2.13.131 T_PD_PHARM_DTL

Detail information about drug services (pharmacy and compound drug) that have been paid for in the MMIS.

Column Name	Description	Type	Length	Precision	Primary Key
SAK_CLAIM	System assigned key which uniquely identifies a claim in the system.	NUMBER	9	0	Y
NUM_DTL	The number of the detail on a claim record.	NUMBER	4	0	Y
CDE_DRUG_FORM	The basic drug measurement unit (each, milliliter, or grams) for performing price calculations.	CHAR	2	0	N
SAK_DRUG	System assigned key for a unique drug	NUMBER	9	0	N
CDE_NDC_STATUS	Indicates whether drug code is prescription only or non-legend.	CHAR	1	0	N
AMT_BILLED	Amount request by provider for payment for services rendered to a recipient.	NUMBER	8	2	N
AMT_ALWD	Amount allowed for services rendered.	NUMBER	9	2	N
AMT_PAID	Amount paid for services rendered.	NUMBER	9	2	N
AMT_AWP	Average wholesale price for drug.	NUMBER	12	5	N
AMT_MAC	The unit price for a drug under either Federal MAC regulation or state MAC, whichever is lesser or applicable to the NDC on the claim.	NUMBER	12	5	N
QTY_DISPENSE	Number of units of a drug dispensed to a recipient. The type of unit is expressed in CDE DRUG FORM.	NUMBER	10	3	N
AMT_EAC	Estimated acquisition cost for drug.	NUMBER	12	5	N
CDE_CLM_STATUS	Indicates the status of the detail in the MMIS system.	CHAR	1	0	N

Column Name	Description	Type	Length	Precision	Primary Key
AMT_DETAIL_TPL	Total amount that other insurance paid prior to submission to Medicaid for the service.	NUMBER	9	2	N
RATE_PRICE	Code used to identify the rate type use to pay the claim.	CHAR	4	0	N

2.13.132 T_PD_PHARM_HDR

General information about drug services (pharmacy and compound drug) that have been paid for in the MMIS.

Column Name	Description	Type	Length	Precision	Primary Key
SAK_CLAIM	System assigned key which uniquely identifies a claim in the system.	NUMBER	9	0	Y
SAK_RECIP	The system assigned internal key for a unique recipient.	NUMBER	9	0	N
PROV_BILLING	System assigned key that uniquely identifies the provider enrollment tracking.	NUMBER	9	0	N
SAK_PROV_LOC	Unique identifier for the provider service location	NUMBER	9	0	N
SAK_PROV_REND	System assigned key that uniquely identifies the provider enrollment tracking.	NUMBER	9	0	N
SAK_PROV_LOC_REND	Unique identifier for the provider service location.	NUMBER	9	0	N
NUM_DTL_TOTAL	Total number of details associated with claim header.	NUMBER	4	0	N
AMT_CO_PAY	Amount paid by the recipient for drugs dispensed.	NUMBER	7	2	N

Column Name	Description	Type	Length	Precision	Primary Key
AMT_NET_BILLED	Amount remaining on a claim after payment has been made by all other sources (co-pay, TPL, and so on).	NUMBER	8	2	N
AMT_TOT_REIMB	Amount reimbursed to provider for drugs dispensed.	NUMBER	10	2	N
NUM_ICN	Number assigned to a claim processed in the system used for internal control purposes.	CHAR	13	0	N
TPL_AMT	Amount paid for drugs by a third party.	NUMBER	8	2	N
CDE_CLM_TXN_TYP	Code which further defines the status of a claim in the MMIS system. This is used to identify whether the claim processed to pay during the first cycle in which it was submitted or whether it took several cycles before the errors were corrected.	CHAR	1	0	N
CDE_CLM_STATUS	Indicates the status of a claim.	CHAR	1	0	N
DTE_BILLED	Date on which the provider or billing service prepared the claim form to be submitted.	NUMBER	8	0	N
DTE_PRESCRIBE	Date physician prescribed drug for a recipient.	NUMBER	8	0	N
DTE_DISPENSE	Date pharmacy dispensed drug to recipient.	NUMBER	8	0	N

Column Name	Description	Type	Length	Precision	Primary Key
ID_PROV_PRESCRB	License number of the provider who prescribed the drugs be administered to the recipient. This does not have to be an enrolled provider.	CHAR	15	0	N
IND_EMERGENCY	Indication (Y/N) of whether drugs were dispensed as a result of an emergency situation.	CHAR	1	0	N
NUM_PRSCRIP	Number assigned by a pharmacy to identify the drug dispensed to a recipient.	CHAR	7	0	N
QTY_REFILL	This is the refill number for the prescribed drug. This is not the available number of refills. The first time the prescription is filled, this attribute will be 0. The second time is filled - the first refill - this attribute will be 1, and so on.	CHAR	2	0	N
NUM_DAY_SUPPLY	Number of days a prescribed drug should last a recipient.	NUMBER	9	0	N
CDE_CLM_TYPE	Code that specifies the type of claim record. The code for pharmacy claims is "P", and compound is "Q".	CHAR	1	0	N
AMT_BILLED	Amount billed by provider for services rendered.	NUMBER	8	2	N

Column Name	Description	Type	Length	Precision	Primary Key
AMT_PATNT_LIAB	Amount that the recipient is responsible to pay for drugs dispensed.	NUMBER	8	2	N
CDE_DUR_INTRVNTN	Record of whether a drug utilization and review intervention code was given in response to a ProDUR alert. The intervention code indicates whom the pharmacist consulted with (nobody, physician, recipient) to decide whether to fill the prescription.	CHAR	2	0	N
CDE_DUR_OUTCOME	The outcome code returned from the provider in response to a Prospective Drug Utilization Review alert. This code indicates whether the prescription was filled as is, changed, or not filled.	CHAR	2	0	N
IND_PREGNANCY	Indicates whether drug is related to the condition of being pregnant.	CHAR	1	0	N
IND_NURSE_HOME	Indicates whether the drug was dispensed for a recipient who resides in a nursing home facility.	CHAR	1	0	N
IND_PROV_SIGN	Used to indicate whether or not there was a valid provider signature on the original claim.	CHAR	1	0	N

Column Name	Description	Type	Length	Precision	Primary Key
ID_CLERK	The ID of the clerk who has been assigned to work this claim.	CHAR	8	0	N
AMT_NDC_PROFEE	This is the amount that the provider receives for dispensing a prescription drug. This amount varies by provider type.	NUMBER	7	2	N
IND_BRAND_MED_NEC	This field indicates the reason, if any, that a brand name drug was dispensed.	CHAR	1	0	N
IND_ELECT_CLM	This field is keyed in to indicate if the provider is a possible electronic biller.	CHAR	1	0	N
QTY_DISPENSE	The number of units of a drug dispensed to a recipient.	NUMBER	10	3	N
CDE_PROV_SPEC	Code which indicates the scope of practice or operations of the billing provider.	CHAR	3	0	N
CDE_PROV_TYPE	Code which indicates the provider type for which a provider is licensed.	CHAR	2	0	N
CDE_COUNTY	Numeric (geographical/political) representation of the county in the state of MMIS in which the provider practices.	VARCHAR2	10	0	N
IND_CARRIER_DENIED	Indicates if other insurance carrier denied the claim	CHAR	1	0	N

Column Name	Description	Type	Length	Precision	Primary Key
DTE_FINAL	A claim may be adjudicated by more than one Payer depending on the beneficiary/recipient coverage. Financial may run different cycles for different Payers on different dates. This date represents date on which the first financial cycle runs for Payers that finalize the claim.	NUMBER	8	0	N
DTE_FINAL_LAST_PAYER	A claim may be adjudicated by more than one Payer depending on the beneficiary/recipient coverage. Financial may run different cycles for different Payers on different dates. This date represents date on which the last financial cycle runs for Payers that finalize the claim.	NUMBER	8	0	N
CDE_NCPDP_CONFLICT	Reason for Service Code	CHAR	2	0	N
CDE_CLARIFICATION	Submission Clarification Code	CHAR	2	0	N
CDE_DISPENSE_STATUS	Code indicating the quantity dispensed is a partial fill or the completion of a partial fill. Used only in situations where inventory shortages do not allow the full quantity to be dispensed.	CHAR	1	0	N

Column Name	Description	Type	Length	Precision	Primary Key
CDE_ENC_STATUS	Code which indicates the status of the encounter in the system as a result of interChange editing. The values will be T - Threshold, I - Informational or P - paid.	CHAR	1	0	N
IND_ENCOUNTER	This field indicates if the claim is an encounter. Valid values Y or N.	CHAR	1	0	N
IND_PR_OVERRIDE	Override Billing Provider calculation	CHAR	1	0	N
IND_PR_OVERRIDE_REND	Override Rendering Provider calculation	CHAR	1	0	N

2.13.133 T_PD_PHYS_DTL

Detailed information concerning medical/professional services that have been paid in the MMIS.

Column Name	Description	Type	Length	Precision	Primary Key
SAK_CLAIM	System assigned key which uniquely identifies a claim in the system.	NUMBER	9	0	Y
NUM_DTL	The number of the detail on a claim record.	NUMBER	4	0	Y
SAK_PROV_PERF	System assigned key that uniquely identifies the provider enrollment tracking.	NUMBER	9	0	N
SAK_PROV_LOC_REND	Unique identifier for the provider service location.	NUMBER	9	0	N
DTE_FIRST_SVC	Date on which services were first performed for a recipient.	NUMBER	8	0	N
DTE_LAST_SVC	Date on which services were last performed for a recipient.	NUMBER	8	0	N

Column Name	Description	Type	Length	Precision	Primary Key
QTY_BILLED	Number of units of service that were provided.	NUMBER	6	2	N
QTY_ALLOWED	The number of services that are allowed for the detail.	NUMBER	6	2	N
IND_EMERGENCY	Indicates whether the service was provided as result of emergency situation.	CHAR	1	0	N
IND_PREGNANCY	Indicates whether service is related to condition of being pregnant.	CHAR	1	0	N
SAK_PROCEDURE	System assigned key for procedure code indicating service provide on a detail.	NUMBER	9	0	N
CDE_PROC_MOD	Code used to further define a procedure provided.	CHAR	2	0	N
CDE_MODIFIER_2	Code used to further define a procedure provided.	CHAR	2	0	N
CDE_MODIFIER_3	Code used to further define a procedure provided.	CHAR	2	0	N
AMT_BILLED	Amount of money requested for payment by a provider for services rendered to a recipient.	NUMBER	8	2	N
AMT_PAID	Amount sent to a provider for payment for services rendered to a recipient.	NUMBER	9	2	N
AMT_ALWD	Amount approved to pay for services provided to a recipient.	NUMBER	9	2	N

Column Name	Description	Type	Length	Precision	Primary Key
AMT_CO_PAY	Amount paid by recipient for services rendered.	NUMBER	7	2	N
CDE_POS	Location where service was rendered.	CHAR	2	0	N
CDE_DIAG_TREAT_IND	Indicates which diagnosis (or diagnoses) for which services were provided. Valid values are 1,2,3,4 for paper claims and 1-8 for electronic claims.	CHAR	8	0	N
CDE_CLM_STATUS	Indicates the status of the detail in the MMIS system.	CHAR	1	0	N
IND_EPSDT_REF	Block 24J on the HCFA 1500. Defines EPSDT referral/treatment information. The valid values are as follows: YD - EPSDT, dental referral YV - EPSDT, vision referral YH - EPSDT, hearing referral YO - EPSDT, other referral AT - EPSDT, abnormal not treated AN - EPSDT, abnormal treated AR - EPSDT, abnormal	CHAR	2	0	N
CDE_EPSDT_FP	A code from the HCFA 1500 claim form block 24 H indicating EPSDT or Family Planning.	CHAR	1	0	N
CDE_PROV_SPEC	Code which indicates the scope of practice or operations of the rendering provider.	CHAR	3	0	N
IND_SYS_GENERATE	Indicates whether detail was added by system during claim's processing. Valid values Y - yes or N - no.	CHAR	1	0	N

Column Name	Description	Type	Length	Precision	Primary Key
IND_CLAIM_CHECK	This field indicates whether or not the detail has been through the ClaimCheck program.	CHAR	1	0	N
CDE_MODIFIER_4	This contains the fourth modifier field on the claim detail.	CHAR	2	0	N
amt_detail_TPL	This is the total amount paid by this payer for this detail. This is a derived field computed from the CAS segments on the 837 as follows. The total Provider Adjustment Amt (DA3-25.0) for a detail equals the sum of all the adjustment amounts inCAS03, 06, 09, 12, 15, and 18. Subtracting this amount form detail billed amounts yields the detail TPL amount. This is only available for electronic claims.	NUMBER	9	2	N

Column Name	Description	Type	Length	Precision	Primary Key
NUM_DTL_REF	This sequence number points to the original detail or details submitted on the claim. For dental electronic claims this will point to the original detail submitted with more than one tooth number. Bundling. When two or more details are bundled into a single NEW detail, then the original bundled details point to the new bundling detail using a sequence number . The new bundling detail will have the system generated flag on Unbundling. This is the reverse of bundling. In this case a detail on a claim is broken out into two or more details that replace the original detail. The new details will have the system generated flag on and will point to the original unbundled detail.	NUMBER	4	0	N
SAK_PROV_REFERRING	System assigned key that uniquely identifies the provider enrollment tracking.	NUMBER	9	0	N
SAK_PROV_LOC_REF_1	Unique identifier for the provider service location.	NUMBER	9	0	N
SAK_PROV_REFERRING_2	System assigned key that uniquely identifies the provider enrollment tracking.	NUMBER	9	0	N
SAK_PROV_LOC_REF_2	Unique identifier for the provider service location.	NUMBER	9	0	N
IND_PR_OVERRIDE_REND	Override Rendering Provider calculation	CHAR	1	0	N

Column Name	Description	Type	Length	Precision	Primary Key
IND_PR_OVERRIDE_REF_1	Override Referring Provider 1calculation	CHAR	1	0	N
IND_PR_OVERRIDE_REF_2	Override Referring Provider 2 calculation	CHAR	1	0	N

2.13.134 T_PD_PHYS_HDR

General information about medical/professional services that have been paid in the MMIS. These services can include transportation, medical, crossover part B or vision that are billed on CMS 1500 claim form.

Column Name	Description	Type	Length	Precision	Primary Key
SAK_CLAIM	System assigned key which uniquely identifies a claim in the system.	NUMBER	9	0	Y
SAK_RECIP	The system assigned internal key for a unique recipient.	NUMBER	9	0	N
PROV_BILLING	System assigned key that uniquely identifies the provider enrollment tracking.	NUMBER	9	0	N
SAK_PROV_LOC	Unique identifier for the provider service location	NUMBER	9	0	N
SAK_PROV_PERF	System assigned key that uniquely identifies the provider enrollment tracking.	NUMBER	9	0	N
SAK_PROV_LOC_PERF	Unique identifier for the provider service location	NUMBER	9	0	N
SAK_PROV_REFERRING	System assigned key that uniquely identifies the provider enrollment tracking.	NUMBER	9	0	N
SAK_PROV_LOC_REF_1	Unique identifier for the provider service location.	NUMBER	9	0	N

Column Name	Description	Type	Length	Precision	Primary Key
SAK_PROV_REFERRING_2	System assigned key that uniquely identifies the provider enrollment tracking.	NUMBER	9	0	N
SAK_PROV_LOC_REF_2	Unique identifier for the provider service location.	NUMBER	9	0	N
NUM_ICN	Number assigned to a claim processed in the system; used for control purposes.	CHAR	13	0	N
NUM_DTL_TOTAL	Total number of details associated with claim header.	NUMBER	4	0	N
CDE_CLM_STATUS	Indicates the status of a claim in the system. Codes: "P" - paid, "D" - denied, "S" - Suspended, and "R" - Resubmitted.	CHAR	1	0	N
CDE_CLM_TXN_TYP	Code which further defines the status of a claim in the MMIS system. This is used to identify whether the claim processed to pay during the first cycle in which it was submitted or whether it took several cycles before the errors were corrected.	CHAR	1	0	N
CDE_CLM_TYPE	Code that specifies the type of claim record. Physician claims are type M=medical or B=crossover Part B.	CHAR	1	0	N

Column Name	Description	Type	Length	Precision	Primary Key
NUM_PAT_ACCT	Identification for a recipient assigned by a provider and used in their system. This number is not required for processing (information only).	VARCHAR2	38	0	N
AMT_NET_BILLED	Amount remaining on a claim after payment has been made by all other sources (TPL).	NUMBER	8	2	N
TPL_AMT	Amount paid by third party for services rendered.	NUMBER	8	2	N
DTE_BILLED	Date on which the provider or billing service prepared the claim form to be submitted.	NUMBER	8	0	N
AMT_BILLED	Amount requested by provider for services rendered.	NUMBER	8	2	N
AMT_PATNT_LIAB	Amount recipient is responsible to pay for services rendered.	NUMBER	8	2	N
AMT_TOT_REIMB	Amount reimbursed to provider.	NUMBER	10	2	N
AMT_CO_PAY	Amount paid by recipient for services rendered.	NUMBER	7	2	N
DTE_FIRST_SVC	Date on which service was first provided (oldest date of all details).	NUMBER	8	0	N
DTE_LAST_SVC	Date on which service was last provided (latest date from all details).	NUMBER	8	0	N

Column Name	Description	Type	Length	Precision	Primary Key
DTE_TO_HOSP	Date on which recipient was discharged from an inpatient hospital.	NUMBER	8	0	N
DTE_FROM_HOSP	Date on which recipient was admitted to an inpatient hospital.	NUMBER	8	0	N
IND_PROV_SIGN	Indicates whether the paper claim form was signed by the provider who performed the service.	CHAR	1	0	N
IND_ATTACHMENT	Indicator which is used to identify whether a claim is submitted with or without some type of supporting documentation.	CHAR	1	0	N
IND_ACCIDENT	Indicates whether the service performed was as a result of an accident.	CHAR	1	0	N
ID_CLERK	The ID of the clerk who has been assigned to work this claim.	CHAR	8	0	N
CDE_CERTIFICATE	Certification code that belongs to the primary medical provider (PMP).	CHAR	2	0	N
IND_ELECT_CLM	Indicator that identifies paper claims where the provider has been identified as a potential electronic biller.	CHAR	1	0	N
CDE_PROV_SPEC	Code which indicates the scope of practice or operations of the billing provider.	CHAR	3	0	N

Column Name	Description	Type	Length	Precision	Primary Key
CDE_PROV_TYPE	Code which indicates the provider type for which a provider is licensed.	CHAR	2	0	N
CDE_COUNTY	Numeric (geographical/political) representation of the county in the state in which the provider practices.	VARCHAR2	10	0	N
DTE_ACCIDENT	Date of accident found in block 14 on the HCFA-1500 claim form	NUMBER	8	0	N
Cde_Med_Rec_Num	Medical Record Number	VARCHAR2	30	0	N
cde_place_of_service	The location at which a service was rendered, such as office, home, emergency room, and so on. This applies only to electronic claims. Paper claims do not carry place of service at header.	CHAR	2	0	N
Cde_Claim_Frequency	CLM - Claims Frequency Code. Code specifying the reason for claim submission. Code specifying the frequency of the claim; this is the third position of the Uniform Billing Claim Form Bill Type.	CHAR	1	0	N
IND_CARRIER_DENIED	Indicates if other insurance carrier denied the claim	CHAR	1	0	N

Column Name	Description	Type	Length	Precision	Primary Key
DTE_FINAL	A claim may be adjudicated by more than one Payer depending on the beneficiary/recipient coverage. Financial may run different cycles for different Payers on different dates. This date represents CHECK ISSUE date that corresponds with the first financial cycle run for Payers that finalize the claim on that cycle.	NUMBER	8	0	N
DTE_FINAL_LAST_PAYER	A claim may be adjudicated by more than one Payer depending on the beneficiary/recipient coverage. Financial may run different cycles for different Payers on different dates. This date represents last CHECK ISSUE date CORRESPONDING WITH the last financial cycle run for Payers that finalize the claim.	NUMBER	8	0	N
CDE_ENC_STATUS	Code which indicates the status of the encounter in the system as a result of interChange editing. The values will be T - Threshold, I - Informational or P - paid.	CHAR	1	0	N
IND_ENCOUNTER	This field indicates if the claim is an encounter. Valid values Y or N.	CHAR	1	0	N

Column Name	Description	Type	Length	Precision	Primary Key
IND_PR_OVERRIDE	Override Billing Provider calculation	CHAR	1	0	N
IND_PR_OVERRIDE_PERF	Override Performing Provider calculation	CHAR	1	0	N
IND_PR_OVERRIDE_REF_1	Override Referring Provider 1 calculation	CHAR	1	0	N
IND_PR_OVERRIDE_REF_2	Override Referring Provider 2 calculation	CHAR	1	0	N

2.13.135 T_PD_UB92_DTL

Detailed information concerning inpatient, outpatient, home health, crossover part A, crossover part C or nursing home services that have been paid in the MMIS.

Column Name	Description	Type	Length	Precision	Primary Key
SAK_CLAIM	System assigned key which uniquely identifies a claim in the system.	NUMBER	9	0	Y
NUM_DTL	The detail number of a claim record.	NUMBER	4	0	Y
DTE_FIRST_SVC	The first date on which services are rendered for a recipient.	NUMBER	8	0	N
dte_last_svc	Service Line Date. Used to store the service line "To Date" where relevant.	NUMBER	8	0	N
CDE_REVENUE	System assigned key used to uniquely identify a revenue code.	NUMBER	4	0	N
SAK_PROCEDURE	System assigned key to uniquely identify a procedure code.	NUMBER	9	0	N
QTY_UNITS_BILLED	Number of units of service billed at the detail for a UB claim.	NUMBER	9	2	N
QTY_UNITS_ALWD	Quantity allowed for payment for services rendered to a recipient.	NUMBER	9	0	N

Column Name	Description	Type	Length	Precision	Primary Key
AMT_BILLED_UB92	Amount of money requested by a provider for payment on a UB claim form.	NUMBER	9	2	N
AMT_ALWD	Amount allowed by the specific program.	NUMBER	9	2	N
AMT_PAID	Amount paid for services rendered.	NUMBER	9	2	N
AMT_CO_PAY	Amount paid by recipient for services rendered.	NUMBER	7	2	N
CDE_CLM_STATUS	Indicates the status of a transaction record in the MMIS system.	CHAR	1	0	N
IND_SYS_GENERATE	Indicates whether detail was added by system during claim's processing. Valid values Y - yes or N - no.	CHAR	1	0	N
amt_detail_TPL	This is the total amount paid by this payer for this detail. This is a derived field computed from the CAS segments on the 837 as follows. The total Provider Adjustment Amt (DA3-25.0) for a detail equals the sum of all the adjustment amounts inCAS03, 06, 09, 12, 15, and 18. Subtracting this amount form detail billed amounts yields the detail TPL amount.	NUMBER	9	2	N

Column Name	Description	Type	Length	Precision	Primary Key
NUM_DTL_REF	This sequence number points to the original detail or details submitted on the claim. For dental electronic claims this will point to the original submitted with more than one tooth number. Bundling: When two or more details are bundled into a single NEW detail, then the original bundled details point to the new bundling detail using a sequence number. The new bundling detail will have the system generated flag on unbundling. This is the reverse of bundling. In this case a detail claim is broken out into two or more details that replace the original detail. The new details will have the system generated flag on and will point to the original unbundled detail.	NUMBER	4	0	N
sak_pr_other_2	System assigned key that uniquely identifies the second physician who performed the principal procedure.	NUMBER	9	0	N
SAK_PROV_LOC_OTHER_2	System assigned key that uniquely identifies the provider service location.	NUMBER	9	0	N
IND_PR_OVERRIDE_OTHER_2	Override Other Provider 2 calculation	CHAR	1	0	N
IND_CLAIM_CHECK	Indicator showing if claim has been sent to claim check	CHAR	1	0	N

2.13.136 T_PD_UB92_HDR

General information about services that have been paid in the MMIS. These services can include inpatient, outpatient, home health, crossover part A, crossover part C and nursing home that are billed on a UB claim form.

Column Name	Description	Type	Length	Precision	Primary Key
SAK_CLAIM	System assigned key which uniquely identifies a claim in the system.	NUMBER	9	0	Y
SAK_RECIP	The system assigned internal key for a unique recipient.	NUMBER	9	0	N
PROV_BILLING	System assigned key that uniquely identifies the provider enrollment tracking.	NUMBER	9	0	N
SAK_PROV_LOC	Unique identifier for the provider service location	NUMBER	9	0	N
SAK_PR_FACILITY	System assigned key that uniquely identifies the provider enrollment tracking.	NUMBER	9	0	N
SAK_PROV_LOC_FA	System assigned key that uniquely identifies the provider service location.	NUMBER	9	0	N
SAK_PR_OTHER_2	System assigned key that uniquely identifies the provider enrollment tracking.	NUMBER	9	0	N
SAK_PROV_LOC_OTHER_2	System assigned key that uniquely identifies the provider service location.	NUMBER	9	0	N
NUM_ICN	Number assigned to a claim processed in the system. This number is used for control purposes.	CHAR	13	0	N

Column Name	Description	Type	Length	Precision	Primary Key
NUM_DTL_TOTAL	Total number of details associated with the claim header.	NUMBER	4	0	N
CDE_CLM_STATUS	Code which indicates the header status of the claim in the system.	CHAR	1	0	N
CDE_CLM_TXN_TYP	Code which further defines the status of a claim in the MMIS system. This is used to identify whether the claim processed to pay during the first cycle in which it was submitted or whether it took several cycles before the errors were corrected.	CHAR	1	0	N
CDE_CLM_TYPE	Code that specifies the type of claim record. The valid codes for UB claims are I - Inpatient, O - Outpatient, L - Nursing Home, A - Crossover Part A, C - Crossover Part C, and H - Home Health.	CHAR	1	0	N
NUM_PAT_ACCT	Identification for a recipient assigned by a provider and used in their system. This number is not required for processing (information only).	VARCHAR2	38	0	N

Column Name	Description	Type	Length	Precision	Primary Key
CDE_TYPE_OF_BILL	The location at which a service was rendered, such as office, home, emergency room, and so on. This applies only to electronic claims. Paper claims do not carry place of service at header.	VARCHAR2	3	0	N
DTE_ADMISSION	Date that the recipient was admitted by the provider for inpatient care, outpatient services or start of care.	NUMBER	8	0	N
CDE_ADMIT_HOUR	The hour during which the patient was admitted for inpatient or outpatient care.	CHAR	4	0	N
CDE_ADMIT_TYPE	Code which indicates the priority of the admission for inpatient or outpatient care.	CHAR	1	0	N
CDE_PATIENT_STATUS	Code which indicates the status of the recipient as of the ending service date of the period covered on a UB claim.	CHAR	2	0	N
AMT_PD_PAT_UB92	Amount of money a recipient is responsible for paying for services that were rendered.	NUMBER	9	2	N
DTE_BILLED	Date on which the provider or billing service prepared the claim form to be submitted.	NUMBER	8	0	N

Column Name	Description	Type	Length	Precision	Primary Key
AMT_BILLED_UB92	Amount of money requested for payment by the provider for services performed.	NUMBER	9	2	N
AMT_PAID	The amount of money (check or EFT) we will pay to the submitter of the claim.	NUMBER	9	2	N
DTE_FIRST_SVC	Date on which the statement period on the claim began.	NUMBER	8	0	N
DTE_LAST_SVC	Date on which the statement period on the claim ended.	NUMBER	8	0	N
ID_PROV_ATTEND	The number of the licensed physician who would be expected to certify the medical necessity of the services rendered and/or who has primary responsibility for the patient's medical care and treatment.	CHAR	15	0	N
ID_PROV_OTHER	License number of the physician who performed the principal procedure.	CHAR	15	0	N
ID_PROV_OTHER_2	License number of the second physician who performed the principal procedure.	CHAR	15	0	N
IND_PROV_SIGN	Indicates whether the paper claim form was signed by the provider who performed the service.	CHAR	1	0	N

Column Name	Description	Type	Length	Precision	Primary Key
ID_CLERK	The ID of the clerk who has been assigned to work this claim.	CHAR	8	0	N
AMT_REIMBURSEMENT	Percentage that is used to modify the allowed amount.	NUMBER	9	2	N
AMT_DISP_SHARE	This field holds the result of the disproportionate share amount multiplied by the total allowed amount.	NUMBER	9	2	N
NUM_DAYS_COVD	Indicates the total number of days for the statement period of the claim.	NUMBER	4	0	N
IND_ELECT_CLM	Indicator that identifies paper claims where the provider has been identified as a potential electronic biller.	CHAR	1	0	N
CDE_CERTIFICATE	This field represents the certification code for Managed Care recipients.	CHAR	2	0	N
AMT_OVERHEAD	unused	NUMBER	9	2	N
CDE_PROV_SPEC	Code which indicates the scope of practice or operations of the billing provider.	CHAR	3	0	N
CDE_PROV_TYPE	Code which indicates the provider type for which a provider is licensed.	CHAR	2	0	N

Column Name	Description	Type	Length	Precision	Primary Key
CDE_COUNTY	Numeric (geographical/political) representation of the county in the state in which the provider practices.	VARCHAR2	10	0	N
CDE_ADMIT_SOURCE	The source of admission code that is found in block 20 of the UB claim form for inpatient and LTC claims.	CHAR	1	0	N
Cde_Med_Rec_Num	Medical Record Number	VARCHAR2	30	0	N
Cde_Claim_Frequency	CLM - Claims Frequency Code. Code specifying the reason for claim submission. Code specifying the frequency of the claim; this is the third position of the Uniform Billing Claim Form Bill Type.	CHAR	1	0	N
IND_CARRIER_DENIED	Indicates if other insurance carrier denied the claim	CHAR	1	0	N
NUM_DAYS_NCOVD	Indicates the number of days not covered for the statement period of the claim.	NUMBER	4	0	N

Column Name	Description	Type	Length	Precision	Primary Key
DTE_FINAL	A claim may be adjudicated by more than one Payer depending on the beneficiary/recipient coverage. Financial may run different cycles for different Payers on different dates. This date represents date on which the first financial cycle runs for Payers that finalize the claim.	NUMBER	8	0	N
DTE_FINAL_LAST_PAYER	A claim may be adjudicated by more than one Payer depending on the beneficiary/recipient coverage. Financial may run different cycles for different Payers on different dates. This date represents date on which the last financial cycle runs for Payers that finalize the claim.	NUMBER	8	0	N
CDE_ENC_STATUS	Code which indicates the status of the encounter in the system as a result of interChange editing. The values will be T - Threshold, I - Informational or P - paid.	CHAR	1	0	N
IND_ENCOUNTER	This field indicates if the claim is an encounter. Valid values Y or N.	CHAR	1	0	N
IND_PR_OVERRIDE	Override Billing Provider calculation	CHAR	1	0	N

Column Name	Description	Type	Length	Precision	Primary Key
IND_PR_OVERRIDE_FACILITY	Override Facility Provider calculation	CHAR	1	0	N
IND_PR_OVERRIDE_OTHER_2	Override Other Provider 2 calculation	CHAR	1	0	N

2.13.137 T_PHRM_COB

Pharmacy COB (other payer) information

Column Name	Description	Type	Length	Precision	Primary Key
SAK_CLAIM	System assigned key which uniquely identifies a claim in the system.	NUMBER	9	0	Y
CNT_OTHER_PAYER	This is the other payer sequence count.	NUMBER	4	0	Y
CNT_OP_AMT_PAID	Occurrence count of Other Payer information for a particular coverage type and date.	NUMBER	4	0	Y
CDE_OP_AMT_PAID_QUAL	Code identifying the type of the Other Payer ID.	CHAR	2	0	N
AMT_OP_PAID	Amount of any payment known by the pharmacy from other sources.	NUMBER	8	2	N

2.13.138 T_PHRM_COB_XREF

Pharmacy COB (other payer) information

Column Name	Description	Type	Length	Precision	Primary Key
SAK_CLAIM	System assigned key which uniquely identifies a claim in the system.	NUMBER	9	0	Y
CNT_OTHER_PAYER	This is the other payer sequence count.	NUMBER	4	0	Y
CDE_OP_COV_TYPE	Code identifying the type of the Other Payer ID.	CHAR	2	0	N

Column Name	Description	Type	Length	Precision	Primary Key
DTE_OTHER_PAYER	Payment or denial date of the claim submitted to the other payer. Used for coordination of benefits.	NUMBER	8	0	N

2.13.139 T_PHRM_DTL_KEYS

This table has the original values keyed on the pharmacy detail for historical purposes.

Column Name	Description	Type	Length	Precision	Primary Key
SAK_CLAIM	System assigned key which uniquely identifies a claim in the system.	NUMBER	9	0	Y
NUM_DTL	The number of the detail on a claim record.	NUMBER	4	0	Y
CDE_NDC	National Drug Code prescribed/dispensed to a recipient.	CHAR	11	0	N
CDE_NDC_SUB	submitted NDC for HIPAA 835	CHAR	11	0	N
QTY_DISPENSE_SUB	submitted units billed for HIPAA 835	NUMBER	10	3	N

2.13.140 T_PHRM_HDR_KEYS

This table has the original values keyed on the pharmacy header for historical purposes.

Column Name	Description	Type	Length	Precision	Primary Key
SAK_CLAIM	System assigned key which uniquely identifies a claim in the system.	NUMBER	9	0	Y
SAK_FILE	Associates the transaction group with a file identifier that can be used to look up the recording of transaction.	NUMBER	9	0	N
SAK_EDI_INTERCHANGE	System assigned key to uniquely identify a EDI record.	NUMBER	9	0	N
ID_MEDICAID	Medicaid identification number	CHAR	12	0	N

Column Name	Description	Type	Length	Precision	Primary Key
ID_PROVIDER	Provider identification number	CHAR	15	0	N
CLM_RECIP_FST_NAM	Recipient's first name on the claim	VARCHAR2	35	0	N
CLM_LST_NAM_RECIP	Recipient's last name on the claim	VARCHAR2	60	0	N
ID_PROV_RENDERING	Medicaid ID of the provider rendering the service.	CHAR	15	0	N
NUM_PRSCRIP_SUB	submitted Prescription Number for HIPAA 835	CHAR	7	0	N
CDE_OTHER_COVERAGE	Code indicating whether or not the patient has other insurance coverage.	CHAR	2	0	N
CDE_LEVEL_OF_SVC	Code indicating the type of service the provider rendered.	CHAR	2	0	N
CDE_PATIENT_LOCATION	Code identifying the location of the patient when receiving pharmacy services.	CHAR	2	0	N

2.13.141 T_PHRM_HDR_OPT

Information regarding partial fill pharmacy claims.

Column Name	Description	Type	Length	Precision	Primary Key
SAK_CLAIM	System assigned key which uniquely identifies a claim in the system.	NUMBER	9	0	Y

Column Name	Description	Type	Length	Precision	Primary Key
AMT_INCENTIVE	Amount represents a fee that is submitted by the pharmacy for contractually agreed upon services, such as for returning/rebilling unused patient medications. This amount is included in the 'Gross Amount Due'	NUMBER	8	2	N
AMT_OTHER_CLAIMED_SUB	Amount representing the additional incurred costs for a dispensed prescription or service. Used for Copay only billing. This amount is included in the 'Gross Amount Due'.	NUMBER	8	2	N
AMT_GROSS_DUE	Total price claimed from all sources. Used for copay only billing.	NUMBER	8	2	N
QTY_DISP_INTEND	Metric decimal quantity of medication that would be dispensed on original filling if inventory were available. Used in association with a 'P' or 'C' in 'Dispensing Status'.	NUMBER	10	3	N
QTY_DAYS_INTEND	Days supply for metric decimal quantity of medication that would be dispensed on original dispensing if inventory were available. Used in association with a 'P' or 'C' in 'Dispensing Status'.	NUMBER	3	0	N

Column Name	Description	Type	Length	Precision	Primary Key
NUM_ASSOC_PRSCRIP	Related 'Prescription/Service Reference Number' to which the service is associated. Used for partial fill processing.	CHAR	7	0	N
DTE_ASSOC_DISPENSE	Date of the 'Associated Prescription/Service Reference Number'. Used for partial fill processing.	NUMBER	8	0	N
CDE_CMPD_RTE_ADMIN	NCPDP Code for the route of administration of the complete compound mixture.	CHAR	2	0	N

2.13.142 T_PHYS_DEXT_KEY

This table has the original values keyed on the physician detail for historical purposes.

Column Name	Description	Type	Length	Precision	Primary Key
SAK_CLAIM	System assigned key which uniquely identifies a claim in the system.	NUMBER	9	0	Y
NUM_DTL	The number of the detail on a claim record.	NUMBER	4	0	Y
NUM_DTL	The number of the detail on a claim record.	NUMBER	4	0	Y
CDE_PROC	Five byte code that specifies a service rendered to a recipient.	CHAR	6	0	N
ID_PERF_PROV	Identifies an individual who rendered a service to a recipient.	CHAR	15	0	N
qlf_Approved_Amount	Qualifier for Approved Amount	CHAR	3	0	N

Column Name	Description	Type	Length	Precision	Primary Key
Amt_Approved	Used primarily in payer-to-payer COB situations by the payer who is sending this claim to another payer. Providers (in a provider-to-payer COB situation) do not usually complete this information but may do so if the information is available. 2. The allowed amount equals the amount for the service line that was approved by the payer sending this 837 to another payer.	NUMBER	9	2	N
qlf_Procedure_Qlf	Qualifier for the Procedure code	CHAR	2	0	N
Cde_Proc_UoM	International Unit is used to indicate dosage amount. Dosage amount is only used for drug claims when the dosage of the drug is variable within a single NDC number (for example, blood factors). MJ Minutes UN Unit Code specifying the units in which a value is being expressed, or manner in which a measurement has been taken.	CHAR	2	0	N
Cde_Copay_Status	Code indicating whether or not co-payment requirements were met on a line by line basis. Required if patient was exempt from co-pay.	CHAR	1	0	N
qty_Med_Necessity_Lnth	Lopp 2400 SV502	NUMBER	6	2	N
cde_uom_dme	Code specifying the units in which a value is being expressed, or manner in which a measurement has been taken.	CHAR	2	0	N
amt_Rental_DME	loop 2400 SV504	NUMBER	9	2	N

Column Name	Description	Type	Length	Precision	Primary Key
amt_Purchase_DME	Loop 2400 SV505	NUMBER	9	2	N
cde_Bill_Frequency	Loop 2400 SV506	CHAR	1	0	N
ID_PROV_REFERRING	Number identifying a provider or a case manager who refers recipient to another provider for services.	CHAR	15	0	N
ID_PROV_REFERRING_2	Number identifying a provider or a case manager who refers recipient to another provider for services.	CHAR	15	0	N
qlf_svc_line_dte	Date Time Qualifier for Service Line Date. Code specifying type of date or time, or both date and time.	CHAR	3	0	N
qlf_svc_line_dte_fmt	Date Time Period Format Qualifier for Service Line Date. Code indicating the date format, time format, or date and time format.	CHAR	3	0	N
SAK_PROC_OLD	The old procedure sak used to bundle or unbundle a claim detail.	NUMBER	9	0	N
AMT_BILLED_ORIG	Original billed amount on the claim detail. Will be NULL if the original billed amount was not changed. If the original billed amount was changed, this column will retain the value of the original billed amount before it was changed.	NUMBER	8	2	N

Column Name	Description	Type	Length	Precision	Primary Key
QTY_BILLED_ORIG	Original billed quantity on the claim detail. Will be NULL if the original billed quantity was not changed. If the original billed quantity was changed, this column will retain the value of the original billed quantity before it was changed.	NUMBER	6	2	N
CDE_PROC_MOD1_ORIG	Original procedure modifier 1. Will be NULL if the original modifier was not changed. If the original modifier was changed, this column will retain the value of the original modifier before it was changed.	CHAR	2	0	N
CDE_PROC_MOD2_ORIG	Original procedure modifier 2. Will be NULL if the original modifier was not changed. If the original modifier was changed, this column will retain the value of the original modifier before it was changed.	CHAR	2	0	N
CDE_PROC_MOD3_ORIG	Original procedure modifier 3. Will be NULL if the original modifier was not changed. If the original modifier was changed, this column will retain the value of the original modifier before it was changed.	CHAR	2	0	N
CDE_PROC_MOD4_ORIG	Original procedure modifier 4. Will be NULL if the original modifier was not changed. If the original modifier was changed, this column will retain the value of the original modifier before it was changed.	CHAR	2	0	N
CDE_PROC_SUB	submitted Procedure Code for HIPAA 835	CHAR	6	0	N

Column Name	Description	Type	Length	Precision	Primary Key
CDE_POS_SUB	submitted place of service for HIPAA 835	CHAR	2	0	N
QTY_BILLED_SUB	submitted units billed for HIPAA 835	NUMBER	6	2	N
CDE_PROC_MOD1_SUB	submitted Procedure Modifier1 for HIPAA 835	CHAR	2	0	N
CDE_PROC_MOD2_SUB	submitted Procedure Modifier2 for HIPAA 835	CHAR	2	0	N
CDE_PROC_MOD3_SUB	submitted Procedure Modifier3 for HIPAA 835	CHAR	2	0	N
CDE_PROC_MOD4_SUB	submitted Procedure Modifier4 for HIPAA 835	CHAR	2	0	N

2.13.143 T_PHYS_HDR_KEY

This table has the original values keyed on the physician header for historical purposes.

Column Name	Description	Type	Length	Precision	Primary Key
SAK_CLAIM	System assigned key which uniquely identifies a claim in the system.	NUMBER	9	0	Y
SAK_FILE	Associates the transaction group with a file identifier that can be used to look up the recording of transaction.	NUMBER	9	0	N
SAK_EDI_Interchange	System assigned key to uniquely identify a EDI record.	NUMBER	9	0	N
ID_MEDICAID	Identification number assigned to a recipient of services.	CHAR	12	0	N
ID_PROVIDER	Identification number assigned to a group or individual that provides medical services to recipients.	CHAR	15	0	N
ID_PERF_PROV	Identifies an individual who rendered a service to a recipient.	CHAR	15	0	N

Column Name	Description	Type	Length	Precision	Primary Key
ID_PROV_REFER	Number identifying a provider or a case manager who refers recipient to another provider for services.	CHAR	15	0	N
CLM_RECIP_FST_NAM	This is the first initial of the recipient's name. It is what is keyed on the claim.	VARCHAR2	35	0	N
CLM_LST_NAM_RECIP	This is the first three characters of the recipient's last name. It is what is keyed on the claim.	VARCHAR2	60	0	N
cde_Billing_EntityId	Loop: 2010AA BILLING PROVIDER NAME NM109 Identification Code INDUSTRY: Billing Provider Identifier ALIAS: Billing Provider Primary ID	VARCHAR2	15	0	N
qlf_sub_dob_fmt	Date Time Period Format Qualifier for Subscriber Date of Birth (DOB). Component of Subscriber Demographic Information.	CHAR	3	0	N
Dte_Subscriber_DOB	2000BA - Subscriber Date Of Birth	DATE	0	0	N
Cde_Subscriber_Gender	2000BA - Subscriber Gender	CHAR	1	0	N

Column Name	Description	Type	Length	Precision	Primary Key
cde_Med_Assignment	CLM07 Loop 2300 Provider Accept Assignment Code. Code indicating whether the provider accepts assignment INDUSTRY: Medicare Assignment Code 2438 NSF Reference: 2438 EA0-36.0, FA0-59.0 CLM07 indicates whether the provider accepts Medicare assignment. The NSF mapping to FA0-59.0 occurs only in payer-to-payer COB situations. CODE DEFINITION A Assigned B Assignment Accepted on Clinical Lab Services Only C Not Assigned P Patient Refuses to Assign Benefits	CHAR	1	0	N
ind_benefits_assignment	Yes/No Condition or Response Code O ID 1/1 Code indicating a Yes or No condition or response INDUSTRY: Benefits Assignment Certification Indicator ALIAS: Assignment of Benefits Indicator CLM08 is assignment of benefits indicator. A "Y" value indicates insured or authorized person authorizes benefits to be assigned to the provider; an "N" value indicates benefits have not been assigned to the provider. NSF Reference: DA0-15.0 CODE DEFINITION N No Y Yes	CHAR	1	0	N
cde_Release_Information	CLM - Release of Information Code	CHAR	1	0	N

Column Name	Description	Type	Length	Precision	Primary Key
Cde_Patient_Signature	CLM - Patient Signature Code	CHAR	1	0	N
Cde_Related_Cause_1	CLM - Accident Related Cause	CHAR	2	0	N
Cde_Related_Cause_2	CLM - Accident Related Cause	CHAR	2	0	N
Cde_Related_Cause_3	CLM - Accident Related Cause	CHAR	2	0	N
cde_bill_payto_provider	Code identifying the type of provider. Valid values are: BI- Billing; PT- Pay-To	CHAR	3	0	N
Cde_Accident_State	CLM - Accident State	CHAR	2	0	N
Cde_Accident_Country	CLM - Accident Country	CHAR	2	0	N
Cde_Special_Program	CLM - Special Program Code. Code indicating the special program under which the services rendered were performed.	CHAR	3	0	N
Cde_Prv_Agreement	CLM - Provider Agreement Code. Code indicating the type of agreement under which the provider is submitting this claim	CHAR	1	0	N
Cde_Delay_Reason	CLM - Delay Reason Code. Code indicating the reason why a request was delayed.	CHAR	2	0	N
num_lines_submitted	Number of line items submitted on the claim form or transaction.	NUMBER	4	0	N
ID_PROV_REFERRING_2	Number identifying a provider or a case manager who refers recipient to another provider for services.	CHAR	15	0	N

Column Name	Description	Type	Length	Precision	Primary Key
NUM_PAT_ACCT_SUB	submitted patient account number	VARCHAR2	38	0	N

2.13.144 T_PRICING_XOVER

This table contains crossover specific pricing methods that is used to price crossover claims, when indicated by reimbursement rules.

Column Name	Description	Type	Length	Precision	Primary Key
CDE_PRICING_XOVER	This is the special pricing method to be used to price crossover claims.	CHAR	6	0	Y
DSC_PRICING_XOVER	Description of the crossover claim pricing method.	VARCHAR2	50	0	N

2.13.145 T_PROF_OTH_PYR_HDR

This table contains information received from the 837. The information is specific subscriber information for a previous payer on a claim. For additional information about the data, refer to the appropriate 837 HIPAA Implementation Guide.

Column Name	Description	Type	Length	Precision	Primary Key
SAK_CLAIM	System assigned key which uniquely identifies a claim in the system.	NUMBER	9	0	Y
SAK_PAYER	Unique identifier for a Payer.	NUMBER	9	0	Y
qlf_othr_sub_DOB_fmt	Date Time Period Format Qualifier for Other Subscriber Date of Birth (DOB). Component of Other Subscriber Demographic Information.	CHAR	3	0	N
Dte_Other_Sub_DOB	Other Subscriber Date Of Birth	DATE	0	0	N
Cde_Other_Sub_Gender	Other Subscriber Gender	CHAR	1	0	N
ind_Ben_Assignment	OI - Assignment of Benefits Indicator	CHAR	1	0	N

Column Name	Description	Type	Length	Precision	Primary Key
ind_Release_of_Info	OI - Code identifying whether the provider has on file a signed statement by the patient authorizing release of medical data	CHAR	1	0	N
Cde_Pat_Sign_Source	OI - Code identifying how the patient or subscriber authorization signatures were obtained and retained by the provider	CHAR	1	0	N
qlf_Claim_Adjud_Dt	Qualifier for Claim Adjudication Date DTP info	CHAR	3	0	N
qlf_Clm_Adjud_Dt_Fmt	Format Qualifier for the Claim Adjudication Date	CHAR	3	0	N
Dte_Clm_Adjudication	Claim Adjudication Date	DATE	0	0	N

2.13.146 T_SAK_ICN_DAILY

This entity contains the ICN and claim sak used in daily claim processing.

Column Name	Description	Type	Length	Precision	Primary Key
NUM_ICN	Number assigned to a claim processed in the system; used for control purposes. Unique number in format RRYYDDDBBBSSS: RR - region, YYDDD - Julian date, BBB - batch number, SSS - sequence number.	CHAR	13	0	Y
SAK_CLAIM	System assigned key used to represent this specific claim.	NUMBER	9	0	N
CDE_CLM_STATUS	Disposition status of the claim; for example, paid, denied, suspended.	CHAR	1	0	N

2.13.147 T_SUSP_ADJ_XREF

Associates adjusted dental claims. Links an original paid dental claim (mother) and the claim that was created to modify it (daughter).

Column Name	Description	Type	Length	Precision	Primary Key
SAK_CLAIM	System assigned key which uniquely identifies a claim in the system.	NUMBER	9	0	Y
SAK_CLAIM_ADJ	System assigned key that uniquely identifies the claim that was created (daughter) during the adjustment process.	NUMBER	9	0	N
SAK_EOB	System assigned key that uniquely identifies the explanation of benefit code that provides the reason for which the adjustment was created.	NUMBER	9	0	N
DTE_ADJUSTED	Date on which adjustment request was initiated.	NUMBER	8	0	N
ID_CLERK	Identification of clerk that generated adjustment request. The clerk who originates the adjustment request is responsible for the complete processing of the claim. In other words, if the adjustment suspends this clerk is responsible for working it.	CHAR	8	0	N
CDE_ACTION	The action that claims engine need to take on this adjustment: A or blank - reprocess the whole claim; P - reprocess specific details; H - update history only do not edit, audit, ore re-price.	CHAR	1	0	N

2.13.148 T_SUSP_DENTAL_DTL

Detailed information concerning dental services that have encountered an error (edit/audit) during processing. Manual review and correction of claim is required

Column Name	Description	Type	Length	Precision	Primary Key
SAK_CLAIM	System assigned key which uniquely identifies a claim in the system.	NUMBER	9	0	Y

Column Name	Description	Type	Length	Precision	Primary Key
NUM_DTL	The number of the detail on a claim record.	NUMBER	4	0	Y
SAK_PROV_PERF	System assigned key that uniquely identifies the provider enrollment tracking.	NUMBER	9	0	N
SAK_PROV_LOC_PERF	Unique identifier for the provider service location	NUMBER	9	0	N
DTE_FIRST_SVC	Date on which services were first performed for a recipient.	NUMBER	8	0	N
SAK_PROCEDURE	System assigned key which uniquely identifies the procedure code indicating service provided on a detail.	NUMBER	9	0	N
AMT_BILLED	Amount of money requested for payment by a provider for services rendered to a recipient.	NUMBER	8	2	N
AMT_ALWD	Amount approved to pay for services provided to a recipient.	NUMBER	9	2	N
CDE_CLM_STATUS	Indicates the status of the detail in the MMIS system. This can be paid, suspended, or denied.	CHAR	1	0	N
CDE_TOOTH_NBR	Code which indicates the tooth on which a particular service was performed.	CHAR	2	0	N
QTY_BILLED	The number of units billed for the service. All claims will plug a '1' here. Claims converted from the MMIS may have a value greater than '1'.	NUMBER	6	2	N
QTY_ALLOWED	The number of units allowed for the service.	NUMBER	6	2	N

Column Name	Description	Type	Length	Precision	Primary Key
CDE_QUADRANT	The quadrant of the mouth that the procedure on the claim is related to.	CHAR	2	0	N
CDE_PROV_SPEC	Code which indicates the scope of practice or operations of the rendering provider.	CHAR	3	0	N
IND_ADJUST	Indicates if this detail should be adjusted: Y - yes; N or blank - Header action determines.	CHAR	1	0	N
IND_SYS_GENERATE	Indicates whether detail was added by system during claim's processing. Valid values Y - yes or N - no.	CHAR	1	0	N
amt_detail_TPL	This is the total amount paid by this payer for this detail. This is a derived field computed from the CAS segments on the 837 as follows. The total Provider Adjustment Amt (DA3-25.0) for a detail equals the sum of all the adjustment amounts inCAS03, 06, 09, 12, 15, and 18. Subtracting this amount form detail billed amounts yields the detail TPL amount.	NUMBER	9	2	N

Column Name	Description	Type	Length	Precision	Primary Key
NUM_DTL_REF	This sequence number points to the original detail or details submitted on the claim. For dental electronic claims this will point to the original detail submitted with more than one tooth number. Unbundling. This is the reverse of bundling. In this case a detail on a claim is broken out into two or more details that replace the original detail. The new details will have the system generated flag on and will point to the original unbundled detail.	NUMBER	4	0	N
cde_place_of_service	The place of service code representing the location where the dental treatment was rendered.	CHAR	2	0	N
CDE_DIAG_TREAT_IND	Indicates which diagnosis (or diagnoses) for which services were provided. Valid values are 1,2,3,4,5,6,7,8. One detail can be associated with a minimum of 1 diagnosis in the header or maximum of 8 diagnoses in the header for non-transportation claims only.	CHAR	8	0	N
IND_PR_OVERRIDE_PERF	Override Performing Provider calculation	CHAR	1	0	N

2.13.149 T_SUSP_DENTAL_HDR

General information concerning dental services that have encountered an error (edit/audit) during processing. Manual review and correction of claim is required.

Column Name	Description	Type	Length	Precision	Primary Key
SAK_CLAIM	System assigned key which uniquely identifies a claim in the system.	NUMBER	9	0	Y
NUM_ICN	Number assigned to a claim processed in the system; used for control purposes. Unique number in format RRYYDDDBBBSSS: RR - region, YYDDD - Julian date, BBB - batch number, SSS - sequence number.	CHAR	13	0	N
NUM_DTL_TOTAL	Total number of details associated with the claim header.	NUMBER	4	0	N
CDE_CLM_STATUS	Indicates the status of a suspended claim. The valid values are: S-Suspended, R-Resubmitted, and Q-Quality Review by Supervisor is pending.	CHAR	1	0	N
CDE_CLM_TXN_TYP	Code which further defines the status of a claim in the MMIS system. This is used to identify whether the claim processed to pay during the first cycle in which it was submitted or whether it took several cycles before the errors were corrected.	CHAR	1	0	N

Column Name	Description	Type	Length	Precision	Primary Key
CDE_CLM_TYPE	Code that specifies the type of claim record. The code for Dental claims is 'D'.	CHAR	1	0	N
NUM_PAT_ACCT	Identification for a recipient assigned by a provider and used in their system. This number is not required for processing (information only).	VARCHAR2	38	0	N
PROV_BILLING	System assigned key that uniquely identifies the provider enrollment tracking.	NUMBER	9	0	N
SAK_PROV_LOC	Unique identifier for the provider service location	NUMBER	9	0	N
SAK_RECIP	The system assigned internal key for a unique recipient.	NUMBER	9	0	N
AMT_NET_BILLED	Amount remaining on a claim after payment has been made by all other sources (TPL).	NUMBER	8	2	N
TPL_AMT	Amount paid by third party for services.	NUMBER	8	2	N
DTE_BILLED	Date on which the provider or billing service prepared the claim form to be submitted.	NUMBER	8	0	N
AMT_BILLED	Amount requested by provider for services rendered.	NUMBER	8	2	N
AMT_PAID	Amount sent to a provider for payment of services rendered to a recipient.	NUMBER	9	3	N

Column Name	Description	Type	Length	Precision	Primary Key
DTE_FIRST_SVC	Date on which service was first provided (oldest date of all details).	NUMBER	8	0	N
DTE_LAST_SVC	Date on which services were last performed for a recipient.	NUMBER	8	0	N
AMT_PATNT_LIAB	Amount of money that a recipient is responsible for paying for services rendered.	NUMBER	8	2	N
CDE_POS	Code that indicates where the medical services were rendered.	CHAR	2	0	N
IND_EMERGENCY	Indicates whether the service was provided as a result of an emergency situation.	CHAR	1	0	N
IND_ACCIDENT	Indicates whether the service performed was as a result of an accident.	CHAR	1	0	N
IND_PROV_SIGN	Indicates whether the paper claim form was signed by the provider who performed the service.	CHAR	1	0	N
IND_ANOTHER_PLAN	Indicates whether the recipient on the claim has coverage under another company's insurance plan.	CHAR	1	0	N
ID_CLERK	The ID of the clerk assigned to work this claim through Data Corrections.	CHAR	8	0	N

Column Name	Description	Type	Length	Precision	Primary Key
CDE_PROV_TYPE	Code which indicates the provider type for which a provider is licensed.	CHAR	2	0	N
CDE_COUNTY	Numeric (geographical/political) representation of the county in the state in which the provider practices.	VARCHAR2	10	0	N
IND_ELECT_CLM	Indicator that identifies paper claims where the provider has been identified as a potential electronic biller.	CHAR	1	0	N
SAK_PROV_PERF	System assigned key that uniquely identifies the provider enrollment tracking.	NUMBER	9	0	N
SAK_PROV_LOC_PERF	Unique identifier for the provider service location	NUMBER	9	0	N
Cde_Claim_Frequency	CLM - Claims Frequency Code. Code specifying the reason for claim submission. Code specifying the frequency of the claim; this is the third position of the Uniform Billing Claim Form Bill Type INDUSTRY: Claim Submission Reason Code	CHAR	1	0	N
IND_CARRIER_DENIED	Indicates if other insurance carrier denied the claim.	CHAR	1	0	N
CDE_EPSDT_FP	A code from the ADA 200 claim form indicating EPSDT.	CHAR	1	0	N

Column Name	Description	Type	Length	Precision	Primary Key
SAK_PROV_REFERRING	System assigned key that uniquely identifies the provider enrollment tracking.	NUMBER	9	0	N
SAK_PROV_LOC_REF_1	Unique identifier for the provider service location.	NUMBER	9	0	N
SAK_PROV_REFERRING_2	System assigned key that uniquely identifies the provider enrollment tracking.	NUMBER	9	0	N
SAK_PROV_LOC_REF_2	Unique identifier for the provider service location.	NUMBER	9	0	N
CDE_ENC_STATUS	Code which indicates the status of the encounter in the system as a result of interChange editing. The values will be T - Threshold, I - Informational or P - paid.	CHAR	1	0	N
IND_ENCOUNTER	This field indicates if the claim is an encounter. Valid values Y or N.	CHAR	1	0	N
IND_PR_OVERRIDE	Override Billing Provider calculation	CHAR	1	0	N
IND_PR_OVERRIDE_PERF	Override Performing Provider calculation	CHAR	1	0	N
IND_PR_OVERRIDE_REF_1	Override Referring Provider 1 calculation	CHAR	1	0	N
IND_PR_OVERRIDE_REF_2	Override Referring Provider 2 calculation	CHAR	1	0	N

2.13.150 T_SUSP_PHRM_DTL

Detailed information concerning drug services (pharmacy or compound) that have encountered an error (edit/audit) during processing which causes the claim to suspend. Manual review and correction of claim is required.

Column Name	Description	Type	Length	Precision	Primary Key
SAK_CLAIM	System assigned key which uniquely identifies a claim in the system.	NUMBER	9	0	Y
NUM_DTL	The number of the detail on a claim record.	NUMBER	4	0	Y
CDE_DRUG_FORM	The basic drug measurement unit (each, milliliter, or grams) for performing price calculations.	CHAR	2	0	N
SAK_DRUG	System assigned key for a unique drug	NUMBER	9	0	N
CDE_NDC_STATUS	Indicates whether drug code is prescription only or Non-legend.	CHAR	1	0	N
AMT_BILLED	Amount requested by a provider for payment for services rendered to a recipient.	NUMBER	8	2	N
AMT_ALWD	Amount approved to pay for services provided to a recipient.	NUMBER	9	2	N
QTY_DISPENSE	Number of units of a drug dispensed to a recipient. The type of unit is expressed in CDE DRUG FORM.	NUMBER	10	3	N
CDE_CLM_STATUS	Indicates the status of the detail in the MMIS system.	CHAR	1	0	N
AMT_DETAIL_TPL	Total amount that other insurance paid prior to submission to Medicaid for the service.	NUMBER	9	2	N

2.13.151 T_SUSP_PHRM_HDR

General information about drug services (pharmacy and compound drug) that have encountered an error (edit/audit) during processing. Manual review and correction of claim is required.

Column Name	Description	Type	Length	Precision	Primary Key
SAK_CLAIM	System assigned key which uniquely identifies a claim in the system.	NUMBER	9	0	Y
SAK_RECIP	The system assigned internal key for a unique recipient.	NUMBER	9	0	N
PROV_BILLING	System assigned key that uniquely identifies the provider enrollment tracking.	NUMBER	9	0	N
SAK_PROV_LOC	Unique identifier for the provider service location	NUMBER	9	0	N
SAK_PROV_REND	System assigned key that uniquely identifies the provider enrollment tracking.	NUMBER	9	0	N
SAK_PROV_LOC_REND	Unique identifier for the provider service location.	NUMBER	9	0	N
NUM_DTL_TOTAL	Indicates the total number of details on the claim.	NUMBER	4	0	N
NUM_ICN	Number assigned to a claim processed in the system; used for control purposes. Unique number in format RRYYDDDBBBSSS: RR - region, YYDDD - Julian date, BBB - batch number, SSS - sequence number.	CHAR	13	0	N

Column Name	Description	Type	Length	Precision	Primary Key
TPL_AMT	Amount paid for services by a third party.	NUMBER	8	2	N
CDE_CLM_TXN_TYP	Code which further defines the status of a claim in the MMIS system. This is used to identify whether the claim processed to pay during the first cycle in which it was submitted or whether it took several cycles before the errors were corrected.	CHAR	1	0	N
CDE_CLM_STATUS	Indicates the status of a suspended claim. The valid values are: S-Suspended, R-Resubmitted, and Q-Quality Review by Supervisor is pending.	CHAR	1	0	N
DTE_BILLED	The date on which a claim entered the system for processing.	NUMBER	8	0	N
DTE_PRESCRIBE	Date physician prescribed drug for a recipient.	NUMBER	8	0	N
DTE_DISPENSE	Date pharmacy gave drug to recipient.	NUMBER	8	0	N
ID_PROV_PRESCRB	License number of the provider who prescribed the drugs be administered to the recipient. This does not have to be an enrolled provider.	CHAR	15	0	N
IND_EMERGENCY	Indication (Y/N) of whether services were rendered as a result of an emergency situation.	CHAR	1	0	N

Column Name	Description	Type	Length	Precision	Primary Key
NUM_PRSCRIP	Number assigned by a pharmacy to identify the drug dispensed to a recipient.	CHAR	7	0	N
QTY_REFILL	Number of refill for a specific prescribed drug for the recipient.	CHAR	2	0	N
NUM_DAY_SUPPLY	Number of days a prescribed drug should last a recipient.	NUMBER	9	0	N
CDE_CLM_TYPE	Code that specifies the type of claim record. At this time, the code for pharmacy claims is "P", and for compound drug is "Q".	CHAR	1	0	N
AMT_BILLED	Amount billed by provider for services rendered.	NUMBER	8	2	N
AMT_PATNT_LIAB	Amount recipient is responsible to pay for drug dispensed.	NUMBER	8	2	N
IND_NURSE_HOME	Indicates whether the recipient is in a nursing home.	CHAR	1	0	N
CDE_DUR_INTRVNTN	This field should not be used for a suspended claim since the corresponding data can only be received on a POS claim, and POS claims cannot suspend.	CHAR	2	0	N
CDE_DUR_OUTCOME	This field should not be used for a suspended claim since the corresponding data can only be received on a POS claim, and POS claims cannot suspend.	CHAR	2	0	N

Column Name	Description	Type	Length	Precision	Primary Key
IND_PREGNANCY	Indicates whether service is related to condition of being pregnant.	CHAR	1	0	N
IND_PROV_SIGN	Used to indicate whether or not there was a valid provider signature on the original claim.	CHAR	1	0	N
ID_CLERK	The ID of the clerk assigned to work this claim through Data Corrections.	CHAR	8	0	N
AMT_NET_BILLED	Amount remaining on a claim after payment has been made by all other sources (co-pay, TPL).	NUMBER	8	2	N
AMT_NDC_PROFEE	This is the amount that the provider receives for dispensing a prescription drug. This amount varies by provider type.	NUMBER	7	2	N
IND_BRAND_MED_NEC	This field indicates the reason, if any, that a brand name drug was dispensed.	CHAR	1	0	N
CDE_PROV_TYPE	Code which indicates the provider type for which a provider is licensed.	CHAR	2	0	N
CDE_COUNTY	Numeric (geographical/political) representation of the county in the state in which the provider practices.	VARCHAR2	10	0	N

Column Name	Description	Type	Length	Precision	Primary Key
IND_ELECT_CLM	Indicator that identifies paper claims where the provider has been identified as a potential electronic biller.	CHAR	1	0	N
QTY_DISPENSE	The quantity of the drug that was dispensed to the recipient.	NUMBER	10	3	N
IND_CARRIER_DENIED	Indicates if other insurance carrier denied the claim.	CHAR	1	0	N
CDE_NCPDP_CONFLICT	Reason for Service Code	CHAR	2	0	N
CDE_CLARIFICATION	Submission Clarification Code	CHAR	2	0	N
CDE_DISPENSE_STATUS	Code indicating the quantity dispensed is a partial fill or the completion of a partial fill. Used only in situations where inventory shortages do not allow the full quantity to be dispensed.	CHAR	1	0	N
CDE_ENC_STATUS	Code which indicates the status of the encounter in the system as a result of interChange editing. The values will be T - Threshold, I - Informational or P - paid.	CHAR	1	0	N
IND_ENCOUNTER	This field indicates if the claim is an encounter. Valid values Y or N.	CHAR	1	0	N
IND_PR_OVERRIDE	Override Billing Provider calculation	CHAR	1	0	N

Column Name	Description	Type	Length	Precision	Primary Key
IND_PR_OVERRIDE_REND	Override Rendering Provider calculation	CHAR	1	0	N

2.13.152 T_SUSP_PHYS_DTL

Detailed information concerning medical/professional services that have encountered an error (edit/audit) during processing. Manual review and correction of claim is required.

Column Name	Description	Type	Length	Precision	Primary Key
SAK_CLAIM	System assigned key which uniquely identifies a claim in the system.	NUMBER	9	0	Y
NUM_DTL	The number of the detail on a claim record.	NUMBER	4	0	Y
SAK_PROV_PERF	System assigned key that uniquely identifies the provider enrollment tracking.	NUMBER	9	0	N
SAK_PROV_LOC_REND	Unique identifier for the provider service location.	NUMBER	9	0	N
SAK_PROV_REFERRING	System assigned key that uniquely identifies the provider enrollment tracking.	NUMBER	9	0	N
SAK_PROV_LOC_REF_1	Unique identifier for the provider service location.	NUMBER	9	0	N
SAK_PROV_REFERRING_2	System assigned key that uniquely identifies the provider enrollment tracking.	NUMBER	9	0	N
SAK_PROV_LOC_REF_2	Unique identifier for the provider service location.	NUMBER	9	0	N
DTE_FIRST_SVC	Date on which services were first performed for a recipient.	NUMBER	8	0	N
DTE_LAST_SVC	Date on which services were last performed for a recipient.	NUMBER	8	0	N
QTY_BILLED	Amount of services provided.	NUMBER	6	2	N

Column Name	Description	Type	Length	Precision	Primary Key
QTY_ALLOWED	The number of units allowed for the service.	NUMBER	6	2	N
IND_EMERGENCY	Indicates whether the service was provided as result of emergency situation.	CHAR	1	0	N
IND_PREGNANCY	Indicates whether service is related to condition of being pregnant.	CHAR	1	0	N
SAK_PROCEDURE	System assigned key for procedure code indicating service provided on a detail.	NUMBER	9	0	N
CDE_PROC_MOD	Code used to further define a procedure provided.	CHAR	2	0	N
CDE_MODIFIER_2	Code used to further define a procedure provided.	CHAR	2	0	N
CDE_MODIFIER_3	Code used to further define a procedure provided.	CHAR	2	0	N
AMT_BILLED	Amount of money requested for payment by a provider for services rendered to a recipient.	NUMBER	8	2	N
AMT_ALWD	Amount approved to pay for services provided to a recipient.	NUMBER	9	2	N
CDE_POS	Location where service was rendered.	CHAR	2	0	N

Column Name	Description	Type	Length	Precision	Primary Key
CDE_DIAG_TREAT_IND	Indicates which diagnosis (or diagnoses) for which services were provided. Valid values 1,2,3,4. One detail can be associated with a minimum of 1 diagnosis in the header or maximum of 4 diagnoses in the header for non-transportation claims only.	CHAR	8	0	N
CDE_CLM_STATUS	Indicates the status of the detail in the MMIS system. This can be paid, suspended, or denied.	CHAR	1	0	N
IND_EPSDT_REF	Block 24J on the HCFA 1500. Defines EPSDT referral/treatment information. The valid values are as follows: YD - EPSDT, dental referral YV - EPSDT, vision referral YH - EPSDT, hearing referral YO - EPSDT, other referral AT - EPSDT, abnormal not treated AN - EPSDT, abnormal treated AR - EPSDT, abnormal	CHAR	2	0	N
CDE_EPSDT_FP	A code from the HCFA 1500 claim form block 24 H indicating EPSDT or Family Planning.	CHAR	1	0	N
IND_SYS_GENERATE	Indicates whether detail was added by system during claim's processing. Valid values Y - yes or N - no.	CHAR	1	0	N

Column Name	Description	Type	Length	Precision	Primary Key
IND_CLAIM_CHECK	This field indicates whether or not the detail has been through the ClaimCheck program.	CHAR	1	0	N
CDE_MODIFIER_4	Code used to further define a procedure provided. The fourth modifier field on the claim detail.	CHAR	2	0	N
CDE_PROV_SPEC	Code which indicates the scope of practice or operations of the rendering provider.	CHAR	3	0	N
IND_ADJUST	Indicates if this detail should be adjusted: Y - yes; N or blank - Header action determines.	CHAR	1	0	N
amt_detail_TPL	This is the total amount paid by this payer for this detail. This is a derived field computed from the CAS segments on the 837 as follows. The total Provider Adjustment Amt (DA3-25.0) for a detail equals the sum of all the adjustment amounts in CAS03, 06, 09, 12, 15, and 18. Subtracting this amount form detail billed amounts yields the detail TPL amount.	NUMBER	9	2	N

Column Name	Description	Type	Length	Precision	Primary Key
NUM_DTL_REF	This sequence number points to the original detail or details submitted on the claim. For dental electronic claims this will point to the original detail submitted with more than one tooth number. Bundling. When two or more details are bundled into a single NEW detail, then the original bundled details point to the new bundling detail using a sequence number . The new bundling detail will have the system generated flag on unbundling. This is the reverse of bundling. In this case a detail on a claim is broken out into two or more details that replace the original detail. The new details will have the system generated flag on and will point to the original unbundled detail.	NUMBER	4	0	N
AMT_CO_PAY	Amount paid by recipient for services rendered.	NUMBER	7	2	N
IND_PR_OVERRIDE_REND	Override Rendering Provider calculation	CHAR	1	0	N
IND_PR_OVERRIDE_REF_1	Override Referring Provider 1calculation	CHAR	1	0	N
IND_PR_OVERRIDE_REF_2	Override Referring Provider 2 calculation	CHAR	1	0	N

2.13.153 T_SUSP_PHYS_HDR

General information concerning medical/professional services that have encountered an error (edit/audit) during processing. Manual review and correction of claim is required. Medical/professional services are included on transportation, crossover part B, and medical claim types.

Column Name	Description	Type	Length	Precision	Primary Key
SAK_CLAIM	System assigned key which uniquely identifies a claim in the system.	NUMBER	9	0	Y
NUM_ICN	Number assigned to a claim processed in the system; used for control purposes. Unique number in format RRYYDDDBBBSSS: RR - region, YYDDD - Julian date, BBB - batch number, SSS - sequence number.	CHAR	13	0	N
NUM_DTL_TOTAL	Total number of details associated with claim header.	NUMBER	4	0	N
CDE_CLM_STATUS	Indicates the status of a suspended claim. The valid values are: S-Suspended, R-Resubmitted, and Q-Quality Review by Supervisor is pending.	CHAR	1	0	N
CDE_CLM_TXN_TYP	Code which further defines the status of a claim in the MMIS system. This is used to identify whether the claim processed to pay during the first cycle in which it was submitted or whether it took several cycles before the errors were corrected.	CHAR	1	0	N

Column Name	Description	Type	Length	Precision	Primary Key
CDE_CLM_TYPE	Code that specifies the type of claim record. The code for physician claims are M=medical or B=crossover part B.	CHAR	1	0	N
NUM_PAT_ACCT	Identification for a recipient assigned by a provider and used in their system. This number is not required for processing (information only).	VARCHAR2	38	0	N
PROV_BILLING	System assigned key that uniquely identifies the provider enrollment tracking.	NUMBER	9	0	N
SAK_PROV_LOC	Unique identifier for the provider service location	NUMBER	9	0	N
SAK_RECIP	The system assigned internal key for a unique recipient.	NUMBER	9	0	N
SAK_PROV_PERF	System assigned key that uniquely identifies the provider enrollment tracking.	NUMBER	9	0	N
SAK_PROV_LOC_PERF	Unique identifier for the provider service location	NUMBER	9	0	N
TPL_AMT	Amount paid by third party for services.	NUMBER	8	2	N
DTE_BILLED	Date on which claim entered the system for processing.	NUMBER	8	0	N
AMT_BILLED	Amount billed by provider for services rendered.	NUMBER	8	2	N

Column Name	Description	Type	Length	Precision	Primary Key
AMT_PATNT_LIAB	Amount recipient is responsible to pay for services rendered.	NUMBER	8	2	N
DTE_FIRST_SVC	Date on which service was first provided (oldest date of all details).	NUMBER	8	0	N
DTE_LAST_SVC	Date on which service was last provided (latest date from all details).	NUMBER	8	0	N
DTE_TO_HOSP	Date on which recipient was discharged from inpatient hospital for which services are being billed.	NUMBER	8	0	N
DTE_FROM_HOSP	Date on which recipient was admitted to inpatient hospital for which services are being billed.	NUMBER	8	0	N
AMT_NET_BILLED	Amount remaining on a claim after payment has been made by all other sources (TPL).	NUMBER	8	2	N
AMT_CO_PAY	Amount paid by recipient for services rendered.	NUMBER	7	2	N
IND_PROV_SIGN	Indicates whether the paper claim form was signed by the provider who performed the service.	CHAR	1	0	N
IND_ATTACHMENT	Indicator which is used to identify whether a claim is submitted with or without some type of supporting documentation.	CHAR	1	0	N

Column Name	Description	Type	Length	Precision	Primary Key
IND_ACCIDENT	Indicates whether the service performed was as a result of an accident.	CHAR	1	0	N
SAK_PROV_REFERRING	System assigned key that uniquely identifies the provider enrollment tracking.	NUMBER	9	0	N
SAK_PROV_LOC_REF_1	Unique identifier for the provider service location.	NUMBER	9	0	N
ID_CLERK	The ID of the clerk assigned to work this claim through Data Corrections.	CHAR	8	0	N
CDE_CERTIFICATE	Certification code that belongs to the primary medical provider (PMP).	CHAR	2	0	N
CDE_PROV_TYPE	Code which indicates the provider type for which a provider is licensed.	CHAR	2	0	N
CDE_COUNTY	Numeric (geographical/political) representation of the county in the state in which the provider practices.	VARCHAR2	10	0	N
IND_ELECT_CLM	Indicator that identifies paper claims where the provider has been identified as a potential electronic biller.	CHAR	1	0	N
DTE_ACCIDENT	Date the accident occurred.	NUMBER	8	0	N
CDE_PROV_SPEC	Code which indicates the scope of practice or operations of the billing provider.	CHAR	3	0	N

Column Name	Description	Type	Length	Precision	Primary Key
Cde_Med_Rec_Num	Code representing the Medical Record Number.	VARCHAR2	30	0	N
cde_place_of_service	The location at which a service was rendered, such as office, home, emergency room, and so on. This applies only to electronic claims. Paper claims do not carry place of service at header.	CHAR	2	0	N
Cde_Claim_Frequency	CLM - Claims Frequency Code. Code specifying the reason for claim submission. Code specifying the frequency of the claim; this is the third position of the Uniform Billing Claim Form Bill Type.	CHAR	1	0	N
IND_CARRIER_DENIED	Indicates if other insurance carrier denied the claim.	CHAR	1	0	N
SAK_PROV_REFERRING_2	System assigned key that uniquely identifies the provider enrollment tracking.	NUMBER	9	0	N
SAK_PROV_LOC_REF_2	Unique identifier for the provider service location.	NUMBER	9	0	N
CDE_ENC_STATUS	Code which indicates the status of the encounter in the system as a result of interChange editing. The values will be T - Threshold, I - Informational or P - paid.	CHAR	1	0	N

Column Name	Description	Type	Length	Precision	Primary Key
IND_ENCOUNTER	This field indicates if the claim is an encounter. Valid values Y or N.	CHAR	1	0	N
IND_PR_OVERRIDE	Override Billing Provider calculation	CHAR	1	0	N
IND_PR_OVERRIDE_PERF	Override Performing Provider calculation	CHAR	1	0	N
IND_PR_OVERRIDE_REF_1	Override Referring Provider 1 calculation	CHAR	1	0	N
IND_PR_OVERRIDE_REF_2	Override Referring Provider 2 calculation	CHAR	1	0	N

2.13.154 T_SUSP_PHYS_XOVER

The amounts used to price a Medicare Crossover Part B Claim for suspended claims. These amounts are sent from Medicare and determine how much Medicaid will pay.

Column Name	Description	Type	Length	Precision	Primary Key
SAK_CLAIM	System assigned key which uniquely identifies a claim in the system.	NUMBER	9	0	Y
NUM_DTL	The number of the detail on a claim record. If zero (0), the information on the table row is for the claim header.	NUMBER	4	0	Y
AMT_ALWD_MCARE	The dollar amount allowed by Medicare for the services provided.	NUMBER	8	2	N
AMT_DEDUCT	The amount the recipient must pay before Medicare will begin to pay this claim.	NUMBER	8	2	N
AMT_COINSURANCE	Dollar amount which represents the recipient's coinsurance payment.	NUMBER	8	2	N
AMT_PSYCH	The amount Medicare has determined that a recipient must pay for psychiatric services received.	NUMBER	9	2	N

Column Name	Description	Type	Length	Precision	Primary Key
AMT_PAID_MCARE	The dollar amount paid by Medicare for the services provided.	NUMBER	8	2	N
DTE_MCARE_PAID	The date that Medicare paid the claim.	NUMBER	8	0	N

2.13.155 T_SUSP_RLHX

Claim record current claim processing is related to based on audit criteria information.

Column Name	Description	Type	Length	Precision	Primary Key
SAK_CLAIM	System assigned key which uniquely identifies a claim in the system.	NUMBER	9	0	Y
NUM_DTL	The number of the detail on a claim record.	NUMBER	4	0	Y
NUM_DTL	The number of the detail on a claim record.	NUMBER	4	0	Y
SAK_ESC	System assigned key that uniquely identifies an error number.	NUMBER	9	0	Y
SAK_PUB_HLTH	System assigned internal key for a recipient plan.	NUMBER	9	0	Y
SAK_FIN_PAYER	The system assigned key that identifies a unique payer within interChange.	NUMBER	9	0	Y
SAK_RELATED_HX	System assigned key that uniquely identifies a claim in history that caused an error (edit/audit) to be set on a claim during processing.	NUMBER	9	0	N
NUM_DTL_RELATED	Number that identifies the header (00) or detail (01-999) of the history claim that is related to a current claim processing.	NUMBER	4	0	N

2.13.156 T_SUSP_UB92_DTL

Detailed information concerning inpatient, outpatient, home health, crossover part A, crossover part C or nursing home services that have encountered an error (edit/audit) during processing. Manual review and correction of the claim is required

Column Name	Description	Type	Length	Precision	Primary Key
SAK_CLAIM	System assigned key which uniquely identifies a claim in the system.	NUMBER	9	0	Y
NUM_DTL	The number of the detail on the claim.	NUMBER	4	0	Y
CDE_REVENUE	System assigned key used to uniquely identify a revenue code.	NUMBER	4	0	N
DTE_FIRST_SVC	The date on which a service was performed.	NUMBER	8	0	N
dte_last_svc	Service Line Date. Used to store the service line "To Date" where relevant.	NUMBER	8	0	N
SAK_PROCEDURE	System assigned key for a procedure code on a detail which indicates the service that was provided.	NUMBER	9	0	N
QTY_UNITS_BILLED	Number of units of service billed at the detail for a UB claim.	NUMBER	9	2	N
AMT_BILLED_UB92	Amount of money that was requested for payment by a provider for services that were rendered to a recipient. This amount represents the units billed multiplied by the rate billed.	NUMBER	9	2	N
AMT_ALWD	Amount of money that is approved to be paid to a provider for a service.	NUMBER	9	2	N
CDE_CLM_STATUS	Code which indicates the status of the claim detail in the MMIS system. This status can be paid, suspended, or denied.	CHAR	1	0	N

Column Name	Description	Type	Length	Precision	Primary Key
IND_SYS_GENERATE	Indicates whether detail was added by system during claim's processing. Valid values Y - yes or N - no.	CHAR	1	0	N
amt_detail_TPL	This is the total amount paid by this payer for this detail. This is a derived field computed from the CAS segments on the 837 as follows. The total Provider Adjustment Amt (DA3-25.0) for a detail equals the sum of all the adjustment amounts in CAS03, 06, 09, 12, 15, and 18. Subtracting this amount form detail billed amounts yields the detail TPL amount. .	NUMBER	9	2	N
NUM_DTL_REF	This sequence number points to the original detail or details submitted on the claim. Bundling. When two or more details are bundled into a single NEW detail, then the original bundled details point to the new bundling detail using a sequence number . The new bundling detail will have the system generated flag on unbundling. This is the reverse of bundling. In this case a detail on a claim is broken out into two or more details that replace the original detail. The new details will have the system generated flag on and will point to the original unbundled detail.	NUMBER	4	0	N
SAK_PR_OTHER_2	System assigned key that uniquely identifies the provider enrollment tracking.	NUMBER	9	0	N

Column Name	Description	Type	Length	Precision	Primary Key
SAK_PROV_LOC_OTHER_2	System assigned key that uniquely identifies the provider service location.	NUMBER	9	0	N
IND_PR_OVERRIDE_OTHER_2	Override Other Provider 2 calculation	CHAR	1	0	N
IND_CLAIM_CHECK	Indicator showing if claim has been sent to claim check	CHAR	1	0	N

2.13.157 T_SUSP_UB92_HDR

General information concerning inpatient, outpatient, home health, crossover part A, crossover part C or nursing home services that have encountered an error (edit/audit) during processing. Manual review and correction of the claim is required.

Column Name	Description	Type	Length	Precision	Primary Key
SAK_CLAIM	System assigned key which uniquely identifies a claim in the system.	NUMBER	9	0	Y
NUM_ICN	Number assigned to a claim processed in the system; used for control purposes. Unique number in format RRYYDDDBBBSSS: RR - region, YYDDD - Julian date, BBB - batch number, SSS - sequence number.	CHAR	13	0	N
NUM_DTL_TOTAL	Total number of details associated with the claim header.	NUMBER	4	0	N
CDE_CLM_STATUS	Indicates the status of a suspended claim. The valid values are: S-Suspended, R-Resubmitted, and Q-Quality Review by Supervisor is pending.	CHAR	1	0	N

Column Name	Description	Type	Length	Precision	Primary Key
CDE_CLM_TXN_TYP	Code which further defines the status of a claim in the MMIS system. This is used to identify whether the claim processed to pay during the first cycle in which it was submitted or whether it took several cycles before the errors were corrected.	CHAR	1	0	N
CDE_CLM_TYPE	Code that specifies the type of claim record. The valid codes for UB are I=Inpatient, O=Outpatient, L=Nursing Home, H=Home Health, A=Crossover Part A, C=Crossover Part C.	CHAR	1	0	N
NUM_PAT_ACCT	Identification for a recipient assigned by a provider and used in their system. This number is not required for processing (information only).	VARCHAR2	38	0	N
CDE_TYPE_OF_BILL	Code which indicates the specific type of facility that is billing for services on a UB claim form.	CHAR	3	0	N
DTE_ADMISSION	Date that the recipient was admitted by the provider for inpatient care, outpatient services or start of care.	NUMBER	8	0	N

Column Name	Description	Type	Length	Precision	Primary Key
CDE_ADMIT_HOUR	The hour during which the patient was admitted for inpatient or outpatient care.	CHAR	4	0	N
CDE_ADMIT_TYPE	Code which indicates the priority of the admission for inpatient or outpatient care.	CHAR	1	0	N
CDE_PATIENT_STATUS	Code which indicates the status of the recipient as of the ending service date of the period covered on a UB claim.	CHAR	2	0	N
AMT_PD_PAT_UB92	Amount of money a recipient is responsible for paying for services that were rendered.	NUMBER	9	2	N
PROV_BILLING	System assigned key that uniquely identifies the provider enrollment tracking.	NUMBER	9	0	N
SAK_PROV_LOC	Unique identifier for the provider service location	NUMBER	9	0	N
SAK_RECIP	The system assigned internal key for a unique recipient.	NUMBER	9	0	N
DTE_BILLED	Date on which the provider or billing service prepared the claim form to be submitted.	NUMBER	8	0	N
AMT_BILLED_UB92	Amount of money requested for payment by the provider for services performed.	NUMBER	9	2	N

Column Name	Description	Type	Length	Precision	Primary Key
DTE_FIRST_SVC	Date on which the statement period on the claim began.	NUMBER	8	0	N
DTE_LAST_SVC	Date on which the statement period on the claim ended.	NUMBER	8	0	N
ID_PROV_ATTEND	The number of the licensed physician who would be expected to certify the medical necessity of the services rendered and/or who has primary responsibility for the patient's medical care and treatment.	CHAR	15	0	N
ID_PROV_OTHER	License number of the physician who performed the principal procedure.	CHAR	15	0	N
ID_PROV_OTHER_2	License number of the second physician who performed the principal procedure.	CHAR	15	0	N
SAK_PR_OTHER_2	System assigned key that uniquely identifies the provider enrollment tracking.	NUMBER	9	0	N
SAK_PROV_LOC_OTHER_2	System assigned key that uniquely identifies the provider service location.	NUMBER	9	0	N
IND_PROV_SIGN	Indicates whether the paper claim form was signed by the provider who performed the service.	CHAR	1	0	N

Column Name	Description	Type	Length	Precision	Primary Key
ID_CLERK	The ID of the clerk assigned to work this claim through Data Corrections.	CHAR	8	0	N
AMT_DISP_SHARE	This field holds the disproportionate share amount multiplied by the total allowed amount.	NUMBER	9	2	N
AMT_REIMBURSEMENT	Percentage that is used to modify the allowed amount. This percentage could cause more or less money to be paid to the provider.	NUMBER	9	2	N
NUM_DAYS_COVD	Indicates the total number of days for the statement period of the claim.	NUMBER	4	0	N
CDE_PROV_TYPE	Code which indicates the provider type for which a provider is licensed.	CHAR	2	0	N
CDE_COUNTY	Numeric (geographical/political) representation of the county in the state in which the provider practices.	VARCHAR2	10	0	N
IND_ELECT_CLM	Indicator that identifies paper claims where the provider has been identified as a potential electronic biller.	CHAR	1	0	N
CDE_CERTIFICATE	This field represents the certification code for Managed Care recipients.	CHAR	2	0	N

Column Name	Description	Type	Length	Precision	Primary Key
AMT_OVERHEAD	Amt overhead is used by new home health pricing.	NUMBER	9	2	N
CDE_ADMIT_SOURCE	The source of admission code that is found in block 20 of the UB claim form for inpatient and LTC claims.	CHAR	1	0	N
Cde_Med_Rec_Num	Code representing the Medical Record Number.	VARCHAR2	30	0	N
Cde_Claim_Frequency	CLM - Claims Frequency Code. Code specifying the reason for claim submission. Code specifying the frequency of the claim; this is the third position of the Uniform Billing Claim Form Bill Type.	CHAR	1	0	N
IND_CARRIER_DENIED	Indicates if other insurance carrier denied the claim.	CHAR	1	0	N
NUM_DAYS_NCOVD	Indicates the number of days not covered for the statement period of the claim.	NUMBER	4	0	N
SAK_PR_FACILITY	System assigned key that uniquely identifies the provider enrollment tracking.	NUMBER	9	0	N
SAK_PROV_LOC_FA	System assigned key that uniquely identifies the provider service location.	NUMBER	9	0	N

Column Name	Description	Type	Length	Precision	Primary Key
CDE_ENC_STATUS	Code which indicates the status of the encounter in the system as a result of interChange editing. The values will be T - Threshold, I - Informational or P - paid.	CHAR	1	0	N
IND_ENCOUNTER	This field indicates if the claim is an encounter. Valid values Y or N.	CHAR	1	0	N
IND_PR_OVERRIDE	Override Billing Provider calculation	CHAR	1	0	N
IND_PR_OVERRIDE_FACILITY	Override Facility Provider calculation	CHAR	1	0	N
IND_PR_OVERRIDE_OTHER_2	Override Other Provider 2 calculation	CHAR	1	0	N

2.13.158 T_SUSP_UB92_XOVER

The amounts used to price a Medicare Crossover Part A or C Claim. These amounts are sent from Medicare and determine how much Medicaid will pay.

Column Name	Description	Type	Length	Precision	Primary Key
SAK_CLAIM	System assigned key which uniquely identifies a claim in the system.	NUMBER	9	0	Y
AMT_DEDUCT	The amount the recipient must pay before Medicare will begin to pay this claim.	NUMBER	8	2	N
AMT_COINSURANCE	Dollar amount which represents the recipient's coinsurance payment.	NUMBER	8	2	N
AMT_DEDUCT_BLOOD	The amount Medicare has determined that a recipient must pay for blood procedures performed.	NUMBER	8	2	N

Column Name	Description	Type	Length	Precision	Primary Key
DTE_MCARE_PAID	The date that Medicare paid the claim.	NUMBER	8	0	N
AMT_PAID_MCARE	The dollar amount paid by Medicare for the services provided	NUMBER	10	2	N
AMT_ALWD_MCARE	The dollar amount ALLOWED by Medicare for the services provided	NUMBER	10	2	N

2.13.159 T_TCN_XREF

This table contains a cross reference between claims from the old system (identified by a TCN) and their converted counterpart claims (identified by a claim SAK) on the current MMIS.

Column Name	Description	Type	Length	Precision	Primary Key
SAK_CLAIM	This table contains a cross reference between claims from the old system (identified by a TCN) and their converted counterpart claims (identified by a claim SAK) on the current MMIS.	NUMBER	9	0	Y
NUM_TCN	The transaction control number used to uniquely identify claims on the previous MMIS.	NUMBER	17	0	Y
CASH_CTL_NO	reference purposes for UNISYS conversion	CHAR	17	0	N

2.13.160 T_UB92_DTL_EXT_KEY

This table has the original values keyed on the UB header for historical purposes.

Column Name	Description	Type	Length	Precision	Primary Key
SAK_CLAIM	System assigned key which uniquely identifies a claim in the system.	NUMBER	9	0	Y
NUM_DTL	The detail number of a claim record.	NUMBER	4	0	Y
CDE_PROC	Code which indicates the service that was performed.	CHAR	6	0	N

Column Name	Description	Type	Length	Precision	Primary Key
qlf_procedure_id	Product/Service ID (Procedure Code) Qualifier. Code identifying the type/source of the descriptive number used in Product/Service ID (Procedure Code).	CHAR	2	0	N
cde_UoM	Unit or Basis for Measurement Code. Code specifying the units in which a value is being expressed, or manner in which a measurement has been taken.	CHAR	2	0	N
amt_unit_rate	Unit Rate. AKA Service Line Rate, Service Line Rate Amount. The rate per unit of associate revenue for hospital accommodation.	NUMBER	10	4	N
amt_non_covered	Service Line Non-Covered Charge Amount, Line Item Denied Charge or Non-Covered Charge Amount.	NUMBER	9	2	N
qlf_svc_line_dte	Date Time Qualifier for Service Line Date. Code specifying type of date or time, or both date and time.	CHAR	3	0	N
qlf_svc_line_dte_fmt	Date Time Period Format Qualifier for Service Line Date. Code indicating the date format, time format, or date and time format.	CHAR	3	0	N

Column Name	Description	Type	Length	Precision	Primary Key
id_prov_attend	The number of the licensed physician who would be expected to certify the medical necessity of the services rendered and/or who has primary responsibility for the patient's medical care and treatment.	CHAR	15	0	N
id_prov_other	License number of the physician who performed the procedure.	CHAR	15	0	N
id_prov_other_2	License number of the second physician who performed the procedure.	CHAR	15	0	N
CDE_PROC_SUB	submitted Procedure Code for HIPAA 835	CHAR	6	0	N
CDE_PROC_MOD1_SUB	submitted Procedure Modifier1 for HIPAA 835	CHAR	2	0	N
CDE_PROC_MOD2_SUB	submitted Procedure Modifier2 for HIPAA 835	CHAR	2	0	N
CDE_PROC_MOD3_SUB	submitted Procedure Modifier3 for HIPAA 835	CHAR	2	0	N
CDE_PROC_MOD4_SUB	submitted Procedure Modifier4 for HIPAA 835	CHAR	2	0	N
CDE_REV_SUB	submitted Revenue Code for HIPAA 835	NUMBER	4	0	N
QTY_BILLED_SUB	submitted units billed for HIPAA 835	NUMBER	9	2	N
AMT_BILLED_ORIG	Original amount billed.	NUMBER	8	2	N
QTY_BILLED_ORIG	Original units billed.	NUMBER	6	2	N
CDE_PROC_MOD1_ORIG	Original Procedure modifier code 1 for HIPAA 835.	CHAR	2	0	N
CDE_PROC_MOD2_ORIG	Original procedure modifier code 2 for HIPAA 835	CHAR	2	0	N

Column Name	Description	Type	Length	Precision	Primary Key
CDE_PROC_MOD3_ORIG	Original procedure modifier code 3 for HIPPA 835.	CHAR	2	0	N
CDE_PROC_MOD4_ORIG	Original procedure modifier code 4 for HIPAA 835.	CHAR	2	0	N
AMT_NON_COVERED_SUB	This is the service line non-covered amount that was submitted on the claim.	NUMBER	9	2	N

2.13.161 T_UB92_DTL_OUTPAT_EDIT

Detail level edits posted by APC Grouper/Pricer Software

Column Name	Description	Type	Length	Precision	Primary Key
SAK_CLAIM	System assigned key to identify a claim	NUMBER	9	0	N
NUM_DTL	Claim detail number	NUMBER	2	0	N
CDE_REASON	Reason code: 1 denied, 2 returned to provider, 3 suspend, 4 line item rejected , 5 line item denied	CHAR	1	0	N
SEQ_NUM	Sequence number	NUMBER	2	0	N
CDE_EDIT	Apc edit code	CHAR	2	0	N

2.13.162 T_UB92_DTL_OUTPAT_GROUP

This table contains claim detail level APC Grouping information returned by APC Pricer Software.

Column Name	Description	Type	Length	Precision	Primary Key
SAK_CLAIM	System assigned key to identify a claim	NUMBER	9	0	Y
NUM_DTL	Claim detail number	NUMBER	2	0	Y
CDE_LNCPT4	Hcpcs procedure code transferred from input	VARCHAR2	5	0	N

Column Name	Description	Type	Length	Precision	Primary Key
CDE_LNPAYAPC	Apc used to determine payment - if no apc is assigned, a value of 00000 is assigned - for partial hospitalization claims, the payment apc may differ from the apc assigned to the hcpcs code	VARCHAR2	5	0	N
CDE_LNCPTAPC	Apc assigned to hcpcs code	VARCHAR2	5	0	N
IND_LNPSEIND	Service Indicator A - Services Not Paid Under Opps B - Non-Allowed Item Or Service For Opps C - Inpatient Procedure E - Non-Allowed Item Or Service F - Corneal Tissue Acquisition And Orphan Drugs G - Drug/Biological Pass-Through (Description Change 04/01/02) H - Device Pass-Through J - New Drug Or New Biological Pass-Through (Discontinued 04/01/2002 And Replaced By Service Indicator G For All Drugs/Biologicals) K - Non Pass-Through Drug/Biological, Radiopharmaceutical Agent, Certain Brachytherapy Sources L - Flu/Ppv Vaccines M - Service Not Billable To The Fi N - Packaged Incidental Service P - Partial Hospitalization Service S - Significant Procedure Not Subject To Multiple Procedure Discounting T - Significant Procedure Subject To Multiple Procedure Discounting V - Medical Visit To Clinic Or Emergency Department W - Invalid Hcpcs Or Invalid Revenue Code With Blank Hcpcs X - Ancillary Service Y - Non-Implantable Dme, Therapeutic Shoes Z - Valid Revenue Code With Blank Hcpcs And No Other Si Assigned	CHAR	1	0	N

Column Name	Description	Type	Length	Precision	Primary Key
IND_LNPPYIND	Payment indicator 1 - paid standard hospital opps amount (service indicators k, s, t, v, x) 2 - services not paid under opps (service indicator a) 3 - not paid (m, w, y, e), or not paid under opps (service indicators b, c, z) 4 - paid at reasonable cost (service indicator f, l) 5 - additional payment for drug or biological (service indicator g) 6 - additional payment for device (service indicator h) 7 - additional payment for new drug or new biological (service indicator j; service dates prior tp 04/01/2002 only) 8 - paid partial hospitalization per diem (service indicator p) 9 - no additional payment; payment included in line items with apcs (status indicator n; or no hcpcs code and certain revenue codes; or hcpcs codes g0176 (activity therapy), g0129 (occupational therapy), or g0177 (partial hospitalization program services))	CHAR	1	0	N
IND_LNDISCFN	Discount formula number that is associated with the line item 1 - 1.0 2 - (1.0 + d (u-1)) / u 3 - t/u 4 - (1 + d) / u 5 - d 6 - td / u 7 - d (1 + d) / u 8 - 2.0 where d = discounting fraction (currently 0.5) where u = number of units where t = terminated procedure discount (currently 0.5)	CHAR	1	0	N
IND_LNLIRFLG	Line item denial or rejection flag 0 - line item not denied or rejected 1 - line item denied or rejected (procedure edit return buffer for line item contains a 9, 13, 18-21, 28, 39, 40, 45, 47, 49, 50, 53, 64, 65, 67, 68, 69 2 - the line is not denied or rejected, but occurs on a day that has been denied or rejected (discontinued as of 04/01/2002)	CHAR	1	0	N

Column Name	Description	Type	Length	Precision	Primary Key
IND_LNPKGFLG	Packaging flag 0 - not packaged 1 - packaged service (service indicator n, or no hcpcs code and certain revenue codes) 2 - packaged as part of partial hospitalization per diem or daily mental health service per diem 3 - artificial charges for surgical procedures (submitted charges for surgical hcpcs < $1.01) 4 - packaged as part of drug administration apc payment	CHAR	1	0	N
IND_LNPAYADJ	Payment Adjustment Flag 0 - No Payment Adjustment 1 - Additional Payment For Current Drug Or Biological Applies To Apc (Service Indicator G) 2 - Additional Payment For Device Applies To Apc- (Service Indicator H) 3 - Additional Payment For New Drug Or New Biological Applies To Apc (Service Indicator J; For Services Prior To 04/01/2002 Only) 4 - Deductible Not Applicable (Specific List Of Hcpcs Codes)	CHAR	1	0	N
IND_LNPAYMTH	Payment method flag 0 - opps pricer determines payment for service 1 - based on opps or coverage rules, the service is not paid 2 - service is not subject to opps 3 - service is not subject to opps and has oce line item denial or rejection 4 - line item is denied or rejected by fi; opps is not applied to line item	CHAR	1	0	N
NUM_LNSEUNIT	Service units transferred from input, for pricer. For the line items assigned apcs 33 or 34, the services units are always assigned a value of 1 even if the input service units were greater than 1	NUMBER	7	0	N

Column Name	Description	Type	Length	Precision	Primary Key
IND_LNLIAFLG	Line item action flag - used in the determination of discount formula and also passed to the pricer 0 - denial or rejection is not ignored 1 - denial or rejection is ignored 2 - external line item denial 3 - external line item rejection 4 - external line item adjustment	CHAR	1	0	N

2.13.163 T_UB92_DTL_OUTPAT_PRICE

This table contains claim detail level APC Pricing information returned by APC Pricer Software.

Column Name	Description	Type	Length	Precision	Primary Key
SAK_CLAIM	System assigned key to identify a claim	NUMBER	9	0	Y
NUM_DTL	Claim detail number	NUMBER	2	0	Y
AMT_LNPYMT	Line item payment	NUMBER	9	2	N
AMT_LNREIM	Line item reimbursement	NUMBER	9	2	N
AMT_LNTOTDEC	Total line item deduction	NUMBER	9	2	N
AMT_LNACOIN	Adjusted coinsurance	NUMBER	9	2	N
AMT_LNRCOIN	Reduced coinsurance	NUMBER	9	2	N
CDE_LNITEMRC	Line item return code	CHAR	2	0	N
CDE_LNPRMETH	Method to identify type of pricing was used to price the line item ap-ambulatory payment classification (apc) cl-clinical laboratory fee schedule dm -durable medical equipment ph -physician's fee schedule am -ambulance fee schedule 00 - not applicable	CHAR	2	0	N
NUM_LNAPCWT	Weight assigned to the apc	NUMBER	8	5	N
AMT_LNOUTLR	Outlier amount associated with the apc payment	NUMBER	9	5	N

2.13.164 T_UB92_HDR_COND_X

This is a cross-reference between the UB header and the condition codes that were billed on the claim.

Column Name	Description	Type	Length	Precision	Primary Key
SAK_CLAIM	System assigned key which uniquely identifies a claim in the system.	NUMBER	9	0	Y
CDE_COND	Code used to identify conditions relating to a UB claim that may affect payer processing.	CHAR	2	0	Y
CDE_COND_SEQ	Sequence number where the condition code was entered on the claim.	CHAR	2	0	Y
QLF_CODE_LIST	This qualifier identifies the type of occurrence. Values are: BI - Occurrence Span BH - Occurrence	VARCHAR2	3	0	N

2.13.165 T_UB92_HDR_DIAG_X

This is a cross-reference between the UB header and the diagnosis codes that were billed on the claim.

Column Name	Description	Type	Length	Precision	Primary Key
SAK_CLAIM	System assigned key which uniquely identifies a claim in the system.	NUMBER	9	0	Y
SAK_DIAG	System assigned key assigned to the code that describes the condition that requires medical attention.	NUMBER	9	0	Y
CDE_DIAG_SEQ	Indicates whether diagnosis is primary, secondary, third, fourth, fifth, sixth, seventh, eighth, ninth, admitting, or emergency in the header. Values are 1 - 9, A, or E. The admitting diagnosis is sequence A and the emergency diagnosis is sequence E.	CHAR	2	0	Y
QLF_CODE_LIST	This qualifier identifies the type of occurrence. Values are: BI - Occurrence Span BH - Occurrence	VARCHAR2	3	0	N
CDE_DIAG	The diagnosis code that was keyed on the claim.	CHAR	7	0	N

2.13.166 T_UB92_HDR_EXT_KEY

This table has the original values keyed on the UB header for historical purposes.

Column Name	Description	Type	Length	Precision	Primary Key
SAK_CLAIM	System assigned key which uniquely identifies a claim in the system.	NUMBER	9	0	Y
SAK_FILE	Associates the transaction group with a file identifier that can be used to look up the recording of transaction.	NUMBER	9	0	N
SAK_EDI_Interchange	System assigned key to uniquely identify a EDI record.	NUMBER	9	0	N
ID_PROVIDER	Identification number assigned to a group or individual who provides services to a recipient.	CHAR	15	0	N
ID_MEDICAID	Identification number assigned to a recipient of services.	CHAR	12	0	N
CLM_RECIP_FST_NAM	This is the first initial of the recipient's name. It is what is keyed on the claim.	VARCHAR2	35	0	N
CLM_LST_NAM_RECIP	This is the first three characters of the recipient's last name. It is what is keyed on the claim.	VARCHAR2	60	0	N
cde_Billing_EntityId	Billing Provider Primary ID.	VARCHAR2	15	0	N
Cde_Related_Cause_1	CLM - Accident Related Cause	CHAR	2	0	N
Cde_Related_Cause_2	CLM - Accident Related Cause	CHAR	2	0	N
Cde_Related_Cause_3	CLM - Accident Related Cause	CHAR	2	0	N
cde_bill_payto_provider	Code identifying the type of provider. Valid values are: BI -Billing, PT - Pay-To BILLING/PAY-TO	CHAR	3	0	N

Column Name	Description	Type	Length	Precision	Primary Key
qlf_sub_dob_fmt	Date Time Period Format Qualifier for Subscriber Date of Birth (DOB). Component of Subscriber Demographic Information.	CHAR	3	0	N
dte_subscriber_dob	Subscriber Date of Birth (DOB). AKA Patient Date of Birth. Component of Subscriber Demographic Information.	DATE	0	0	N
Cde_Sub_Gender	2000BA - Subscriber Gender	CHAR	1	0	N
qlf_facility	Facility Code Qualifier. Code identifying the type of facility referenced. Component of Claim Information.	CHAR	2	0	N
cde_med_assignment	Medicare Assignment Code. Code indicating whether the provider accepts Medicare assignment. Component of Claim Information.	CHAR	1	0	N
ind_benefits_assignment	Benefits Assignment Certification Indicator. Indicates whether (Yes) or not (No) insured or authorized person authorizes benefits to be assigned to the provider. Component of Claim Information.	CHAR	1	0	N
cde_release_of_info	Release of Information Code. Code indicating whether the provider has on file a signed statement by the patient authorizing the release of medical data to other organizations. Component of Claim Information.	CHAR	1	0	N

Column Name	Description	Type	Length	Precision	Primary Key
cde_accident_st	Auto Accident State or Province Code. For Auto Accident Related Causes, the Standard State or Province Code as defined by the appropriate government agency. Component of Claim Information.	CHAR	2	0	N
cde_accident_country	Auto Accident Country Code. Code identifying the country where the accident occurred if outside the US. Component of Claim Information.	CHAR	3	0	N
cde_special_program	Special Program Code. Code indicating the Special Program under which the services rendered to the patient were performed. Component of Claim Information.	CHAR	3	0	N
ind_paper_eob	Explanation of Benefits (EOB) Indicator. Indicates whether (Yes) or not (No) a paper EOB is requested. Component of Claim Information.	CHAR	1	0	N
cde_delay_reason	Delay Reason Code. Code indicating the reason why a request (for example for information) was delayed. Component of Claim Information.	CHAR	2	0	N
qlf_discharge_time	Date Time Qualifier for Discharge Hour. Code specifying type of date or time, or both date and time.	CHAR	3	0	N

Column Name	Description	Type	Length	Precision	Primary Key
qlf_discharge_time_fmt	Date Time Period Format Qualifier for Discharge Hour. Code indicating the date format, time format, or date and time format.	CHAR	3	0	N
time_discharge	Discharge Hour (HHMM)	NUMBER	4	0	N
qlf_statement_dates	Date Time Qualifier for Statement Dates. Code specifying type of date or time, or both date and time.	CHAR	3	0	N
qlf_statement_dt_fmt	Date Time Period Format Qualifier for Statement Dates. Code indicating the date format, time format, or date and time format.	CHAR	3	0	N
qlf_admit_dt_hour	Date Time Qualifier for Admission Date/Hour. Code specifying type of date or time, or both date and time.	CHAR	3	0	N
qlf_admit_dt_tm_fmt	Date Time Period Format Qualifier for Admission Date/Hour. Code indicating the date format, time format, or date and time format.	CHAR	3	0	N
amt_TPL_hdr_only	This is the TPL amount for header only services.	NUMBER	9	2	N
id_pr_facility	Identification number assigned to the facility provider	CHAR	15	0	N
TOB_SUB	submitted Type Of Bill for HIPAA 835	CHAR	3	0	N
NUM_PAT_ACCT_SUB	submitted Type Of Bill for HIPAA 835	VARCHAR2	38	0	N

2.13.167 T_UB92_HDR_ICD9CM

This is a cross-reference between the UB header and the ICD 9 CM codes that were billed on the claim.

Column Name	Description	Type	Length	Precision	Primary Key
SAK_CLAIM	System assigned key which uniquely identifies a claim in the system.	NUMBER	9	0	Y
NUM_SEQ	This column contains the sequence number of the surgical procedure code. The principle procedure will always be sequence 1.	NUMBER	4	0	Y
SAK_PROC_ICD9	System assigned key which represents that surgical procedure code.	NUMBER	9	0	N
CDE_PROC_ICD9	Code which represents the surgical procedure code.	VARCHAR2	4	0	N
DTE_ICD_9_CM_PROC	Date on which the surgical procedure code was performed.	NUMBER	8	0	N
QLF_CODE_LIST	This qualifier identifies the type of occurrence. Values are: BI - Occurrence Span BH - Occurrence	VARCHAR2	3	0	N
QLF_DT_PERIOD_FORMAT	This code identifies the Date-Time format of the DTE_PROC_ICD9. To be used when creating outbound 837 transaction.	VARCHAR2	3	0	N

2.13.168 T_UB92_HDR_INP

Diagnosis Related Group (DRG) pricing information for an inpatient claim. Not all inpatient claims are assigned to a DRG.

Column Name	Description	Type	Length	Precision	Primary Key

Column Name	Description	Type	Length	Precision	Primary Key
SAK_CLAIM	System assigned key which uniquely identifies a claim in the system.	NUMBER	9	0	Y
SAK_DRG	System assigned key for Diagnosis Related Group (DRG). This uniquely identifies a DRG in the system.	NUMBER	9	0	N
SAK_MDC	All possible principal diagnoses are divided into mutually exclusive areas referred to as Major Diagnostic Categories (MDC). These MDCs were formed by physician panels to insure that the DRGs would be clinically coherent.	NUMBER	9	0	N
AMT_BASE_DRG	Base payment amount for an inpatient claim prior to any payment adjustments such as outliers or medical education costs.	NUMBER	9	2	N
AMT_DAY_OUTLIER	Amount reimbursed in addition to the DRG rate for certain inpatient stays that exceed cost thresholds established by the State.	NUMBER	9	2	N
AMT_COST_OUTLIER	Costs associated with the capital costs of the facility. Capital costs include, but are not limited to, depreciation, interest, property taxes, and property insurance.	NUMBER	9	2	N
CDE_DIAG1	First diagnosis (other than principal) that influenced DRG assignment. This field will be blank if a diagnosis (other than principal) did not influence DRG assignment.	CHAR	7	0	N

Column Name	Description	Type	Length	Precision	Primary Key
CDE_DIAG2	Second diagnosis (other than principal) that influenced DRG assignment. This field will be blank if a second diagnosis (other than principal) did not influence DRG assignment.	CHAR	7	0	N
CDE_DIAG_CC	Diagnosis that satisfied the complication/cormorbidity (CC) criteria and influenced DRG assignment. This filed will be blank if there is no CC, major CC or non-traumatic major CC.	CHAR	7	0	N
CDE_PROC1	First operating room procedure that influenced DRG assignment. This field will be blank if no operating room procedure influenced DRG assignment.	CHAR	6	0	N
NUM_VERSION_DRG	Grouper version in use.	VARCHAR2	20	0	N
AMT_DISP_SHR	This is the disproportionate share amount that is calculated during the claims pricing process and paid on the claim.	NUMBER	9	2	N
SAK_DRG_ENHANCED	System assigned key for the enhanced DRG code utilized during the DRG pricing process.	NUMBER	9	0	N
CDE_PROC2	Second operating room procedure that influenced DRG assignment. This field will be blank if no operating room procedure influenced DRG assignment.	CHAR	6	0	N

2.13.169 T_UB92_HDR_OCC

This is a cross-reference between the UB header and the occurrence codes that were billed on the claim.

Column Name	Description	Type	Length	Precision	Primary Key
SAK_CLAIM	System assigned key which uniquely identifies a claim in the system.	NUMBER	9	0	Y
CDE_OCCURRENCE	Code which defines a significant event relating to a particular UB claim that may affect payer processing.	CHAR	2	0	Y
NUM_SEQ	Sequence number which indicates the position of the occurrence code on the claim.	NUMBER	4	0	Y
DTE_OCCURRENCE	The occurrence date of a significant event relating to a particular UB claim that may affect payer processing.	NUMBER	8	0	N
DTE_OCC_TO	The occurrence to date of a significant event relating to a particular UB claim that may affect payer processing. This date is only used for span occurrence codes.	NUMBER	8	0	N
QLF_CODE_LIST	This qualifier identifies the type of occurrence. Values are: BI - Occurrence Span BH - Occurrence	VARCHAR2	3	0	N
QLF_DT_PERIOD_FORMAT	This code identifies the Date-Time format of the DTE_PROC_ICD9. To be used when creating outbound 837 transaction.	VARCHAR2	3	0	N

2.13.170 T_UB92_HDR_OUTPAT

This table contains claim header level information returned by APC Pricer Software

Column Name	Description	Type	Length	Precision	Primary Key
SAK_CLAIM	SYSTEM ASSIGNED KEY TO IDENTIFY A CLAIM	NUMBER	9	0	Y
CDE_CLPRMETH	METHOD BY WHICH IRP PROCESSED THE CLAIM 01-CLAIM WAS GROUPED AS A CMS IN-PATIENT CLAIM (NO PRICING) 02-CLAIM WAS PRICED AS A CMS IN-PATIENT CLAIM (NO GROUPING) 03-CLAIM WAS GROUPED AND PRICED AS A CMS IN-PATIENT CLAIM 05-CLAIM WAS GROUPED AS A CMS OUT-PATIENT CLAIM (NO PRICING) 06-CLAIM WAS GROUPED AND PRICED AS A CMS OUT-PATIENT CLAIM	VARCHAR2	2	0	N
NUM_CLQVERS	THE VERSION OF THE PRICER BEING CALLED	CHAR	10	0	N
IND_CLPROFLG	CLAIM PROCESSED FLAG	CHAR	1	0	N
IND_CLOVLCLD	OVERALL CLAIM DISPOSITION	CHAR	1	0	N
IND_CLREJDSP	CLAIM REJECTION DISPOSITION	CHAR	1	0	N
IND_CLDENDSP	CLAIM DENIAL DISPOSITION	CHAR	1	0	N
IND_CLRPRDSP	CLAIM RETURNED TO PROVIDER DISPOSITION	CHAR	1	0	N
IND_CLSUSDSP	CLAIM SUSPENSION DISPOSITION	CHAR	1	0	N
IND_CLLIRDSP	LINE ITEM REJECTION	CHAR	1	0	N
IND_CLLIDDSP	LINE ITEM DISPOSITION	CHAR	1	0	N
CDE_CLAPCRFL	0 - APC RETURN BUFFER FILLED IN WITH DEFAULT VALUES; NO SERVICES PAID UNDER OPPS, 1 - APC RETURN BUFFER FILLED IN; ONE OR MORE SERVICES PAID UNDER OPPS	CHAR	1	0	N

Column Name	Description	Type	Length	Precision	Primary Key
NUM_CLPGMVER	VERSION IDENTIFICATION OF THE GROUPER USED (FOR IRP'S USAGE)	VARCHAR2	8	0	N
NUM_CLPRCVER	VERSION IDENTIFICATION OF THE PRICER USED (FOR IRP'S USAGE)	VARCHAR2	7	0	N
AMT_CLMDED	TOTAL CLAIM DEDUCTIBLE AMOUNT	NUMBER	9	2	N
AMT_CLOUTLR	TOTAL OUTLIER PAYMENT	NUMBER	9	2	N
AMT_CLTPYMT	TOTAL CLAIM PAYMENT RECEIVED FROM BOTH THE APC AND THE PATIENT	NUMBER	9	2	N
AMT_CLTCHRG	TOTAL CLAIM CHARGE	NUMBER	9	2	N
AMT_CLTCOIN	TOTAL CLAIM COINSURANCE	NUMBER	9	2	N
AMT_CLTREIM	TOTAL CLAIM REIMBURSEMENT - SUM OF ALL LINE ITEM REIMBURSEMENT FIELDS	NUMBER	9	2	N
CDE_CLRTC	PRICER RETURN CODE	VARCHAR2	2	0	N
CDE_CLMSA	METROPOLITAN STATISTICAL AREA ASSOCIATED WITH APC PRICING	VARCHAR2	4	0	N
NUM_CLWIN	WAGE INDEX FOR THE MSA	NUMBER	9	4	N
NUM_CLCCR	COST TO CHARGE RATIO	NUMBER	9	5	N
TXT_CLCBSA	CORE-BASED STATISTICAL AREA ASSOCIATED WITH APC PRICING	VARCHAR2	5	0	N

2.13.171 T_UB92_HDR_OUTPAT_EDIT

Header level edits posted by APC Grouper/Pricer Software.

Column Name	Description	Type	Length	Precision	Primary Key
SAK_CLAIM	SYSTEM ASSIGNED KEY TO IDENTIFY A CLAIM	NUMBER	9	0	Y

Column Name	Description	Type	Length	Precision	Primary Key
CDE_REASON	REASON CODE: 1 DENIED, 2 RETURNED TO PROVIDER, 3 SUSPEND, 4 LINE ITEM REJECTED , 5 LINE ITEM DENIED	CHAR	1	0	N
SEQ_NUM	SEQUENCE NUMBER	NUMBER	2	0	N
CDE_EDIT	APC EDIT CODE	CHAR	2	0	N

2.13.172 T_UB92_HDR_PAYER

This is a cross-reference between the UB claim header and the payer information submitted on the claim.

Column Name	Description	Type	Length	Precision	Primary Key
SAK_CLAIM	System assigned key which uniquely identifies a claim in the system.	NUMBER	9	0	Y
CDE	Code indicating the payer. A value of 'C' indicates that Medicaid is the payer, 'A' indicates that Medicare is the payer and 'B' indicates that another insurance company was the payer.	CHAR	1	0	Y
NUM_SEQ	Sequence number which indicates the position in which the payer information occurs on the claim.	NUMBER	4	0	Y
AMT_PRIOR_PAYMENT	The amount that the hospital has received toward payment of a UB bill prior to the billing on the claim.	NUMBER	9	2	N
AMT_DUE_EST	The amount estimated by the hospital to be due from the indicated payer.	NUMBER	9	2	N

2.13.173 T_UB92_HDR_VALUE

This is a cross-reference between the UB header and the value codes that were billed on the claim.

Column Name	Description	Type	Length	Precision	Primary Key

Column Name	Description	Type	Length	Precision	Primary Key
SAK_CLAIM	System assigned key which uniquely identifies a claim in the system.	NUMBER	9	0	Y
CDE_VALUE	Code used to relate values to identified data elements necessary to process a UB claim.	CHAR	2	0	Y
NUM_SEQ	Sequence number which indicates the position in which the value code and amount occurred on the claim.	NUMBER	4	0	Y
QLF_CODE_LIST	This qualifier identifies the type of occurrence. Values are: BI - Occurrence Span BH - Occurrence	VARCHAR2	3	0	N
AMT_VALUE	Dollar amount of the corresponding value code.	NUMBER	9	2	N

2.13.174 T_UB92_NH_HDR

This entity contains the member level of care code for paid UB claims.

Column Name	Description	Type	Length	Precision	Primary Key
SAK_CLAIM	The sak claim relates this entity back to the paid UB header.	NUMBER	9	0	N
CDE_LOC	This is the recipient's level of care code.	CHAR	3	0	N

2.13.175 T_UB92_TREATMENT

This table contains information on the treatment information on a 837 transaction. For additional information, refer to the 837 Institutional HIPAA Implementation Guide applicable to the claim type being reviewed.

Column Name	Description	Type	Length	Precision	Primary Key
SAK_CLAIM	System assigned key which uniquely identifies a claim in the system.	NUMBER	9	0	Y
NUM_SEQ	Sequence number which indicates the position in which the ICD-9-CM Procedure code occurred on the claim.	NUMBER	4	0	Y
CDE_TREATMENT	Code used to identify conditions relating to a UB claim that may affect payer processing.	VARCHAR2	30	0	N
QLF_CODE_LIST	This qualifier identifies the type of occurrence. Values are: BI - Occurrence Span BH - Occurrence	VARCHAR2	3	0	N

3 Buy-In Data Mainenance Detail System Design

This section of the Claims Detail System Design provides the same sequence of detail for the Buy-In Data Maintenace subsystem as presented for Claims subsystem beginning with the Subsystem flow diagram.

3.1 Buy-In Data Maintenace Subsystem Flow Diagram

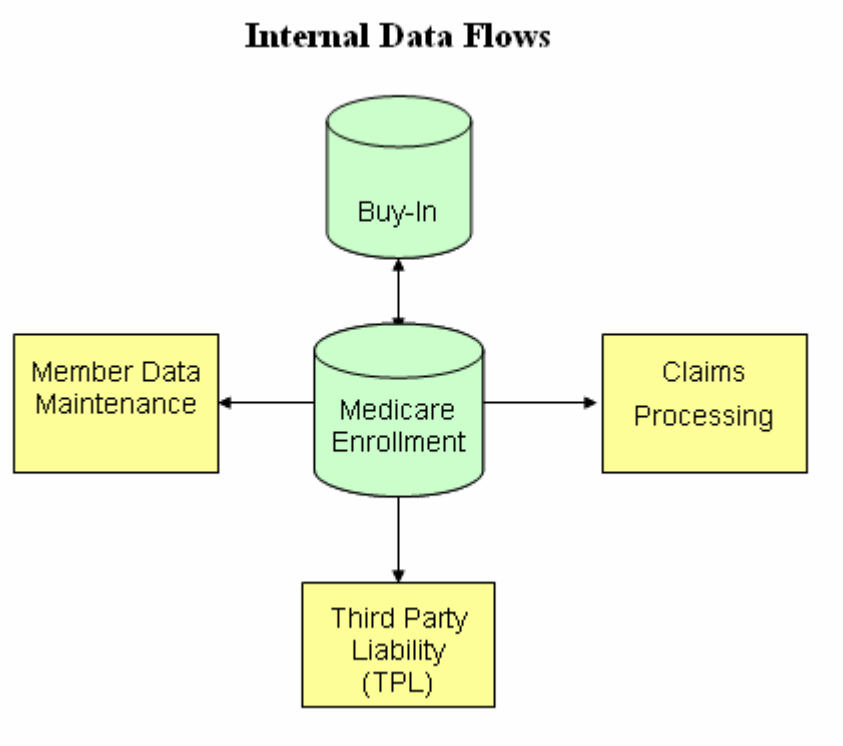

3.2 Subsystem Description

3.2.1 Introduction to Buy-In Data Maintenace

Medicaid beneficiaries who are entitled to receive Medicare benefits may have Medicare premiums paid by the Commonwealth. This is known as Medicare Buy-In. Automated data exchanges between EDS and a federal agency, the Centers for Medicare and Medicaid Services (CMS), are conducted monthly to identify, update, resolve differences, and monitor new and ongoing Medicare Buy-In cases. The Commonwealth is responsible for initiating Medicare Buy-In for eligible members. EDS coordinates Medicare Buy-In resolution with CMS.

Medicare Buy-In is a program designed to allow participating states to pay Medicare premiums for dually-eligible Medicare and Medicaid members, thereby ensuring enrollment in Medicare. Payment of Medicare premiums, coinsurance, and deductibles costs the Commonwealth less than paying the entire cost of medical care for a beneficiary because Medicare is usually primary to the Commonwealth. In addition, the Commonwealth receives Federal Financial Participation (FFP) for premiums paid on behalf of members eligible as Qualified Medicare Beneficiaries (QMB), Qualified Disabled Working Individual (QDWI), Specified Low Income Medicare Beneficiaries (SLMB), and Cash Assistance beneficiaries (SSI).

The Buy-In Data Maintenance function maintains the following information:

- Billing information (Receiving from CMS); and,
- Premium information (Sending to CMS).

3.3 Buy-In Data Maintenance Processes

3.3.1 Buy-In Through PCG Process Model

Connected via	Connected to	Source	Destination
CMS Billing Files (Parts A & B)	Public Consulting Group (PCG)		X
"Clean" Billing Files (Parts A & B)	EDS		X
Response files	CMS		X

3.3.1.1 Process Description

The Center for Medicare and Medicaid Services (CMS) sends billing files of Buy-In members. These files are processed by HMS, and "clean" versions are passed forward to interChange (iC) for historical logging. HMS produces the response files for changes to CMS which are also logged into iC.

3.3.1.2 interChange Narrative

On a monthly basis, CMS transmits two billing files: one for Part A members and one for Part B members. These files are received by HMS, reconciled and applied to the HMS database. HMS then forwards a "clean" copy of both billing files (records that successfully processed) to interChange to be logged for reporting purposes.

HMS next builds a response file for transmission to CMS. This file contains records of changes, additions and deletions from the bill. A copy of this file is forward to iC, again to be logged for reporting purposes.

The files are loaded into the Buy-In tables. The following reports are created by iC:

- Buy-In Part A Billing (BIA-1001-M) - Transactions received from CMS;
- Buy-In Part A Transactions Sent (BIA-1002-M) - Transaction sent to CMS;
- Buy-In Part A Exception Error by Transaction Code (BIA-1004-M) - Exceptions sorted and grouped by transaction codes;
- Buy-In Part A Expenditure Report (BIA-1010-M) - Financial report;
- Buy-In Part A State Totals By Beneficiary Population (BIA-1011-M) - Financial totals grouped by beneficiary population;
- Buy-In Part A Conditional (BIA-1012-M) - Conditional approvals;
- Buy-In Part A Premium Totals (BIA-1013-M) - Premiums paid;
- Buy-In Part B Billing (BIB-2001-M) - Transactions received from CMS;
- Buy-In Part B Transactions Sent (BIB-2002-M) - Transaction sent to CMS;

- Buy-In Part B Exception Error by Transaction Code (BIB-2004-M) - Exceptions sorted and grouped by transaction codes;
- Buy-In Part B Expenditure Report (BIB-2010-M) - Financial report;
- Buy-In Part B State Totals By Beneficiary Population (BIB-2011-M) - Financial totals grouped by beneficiary population; and,
- Buy-In Part B Premium Totals (BIB-2013-M) - Premiums paid.

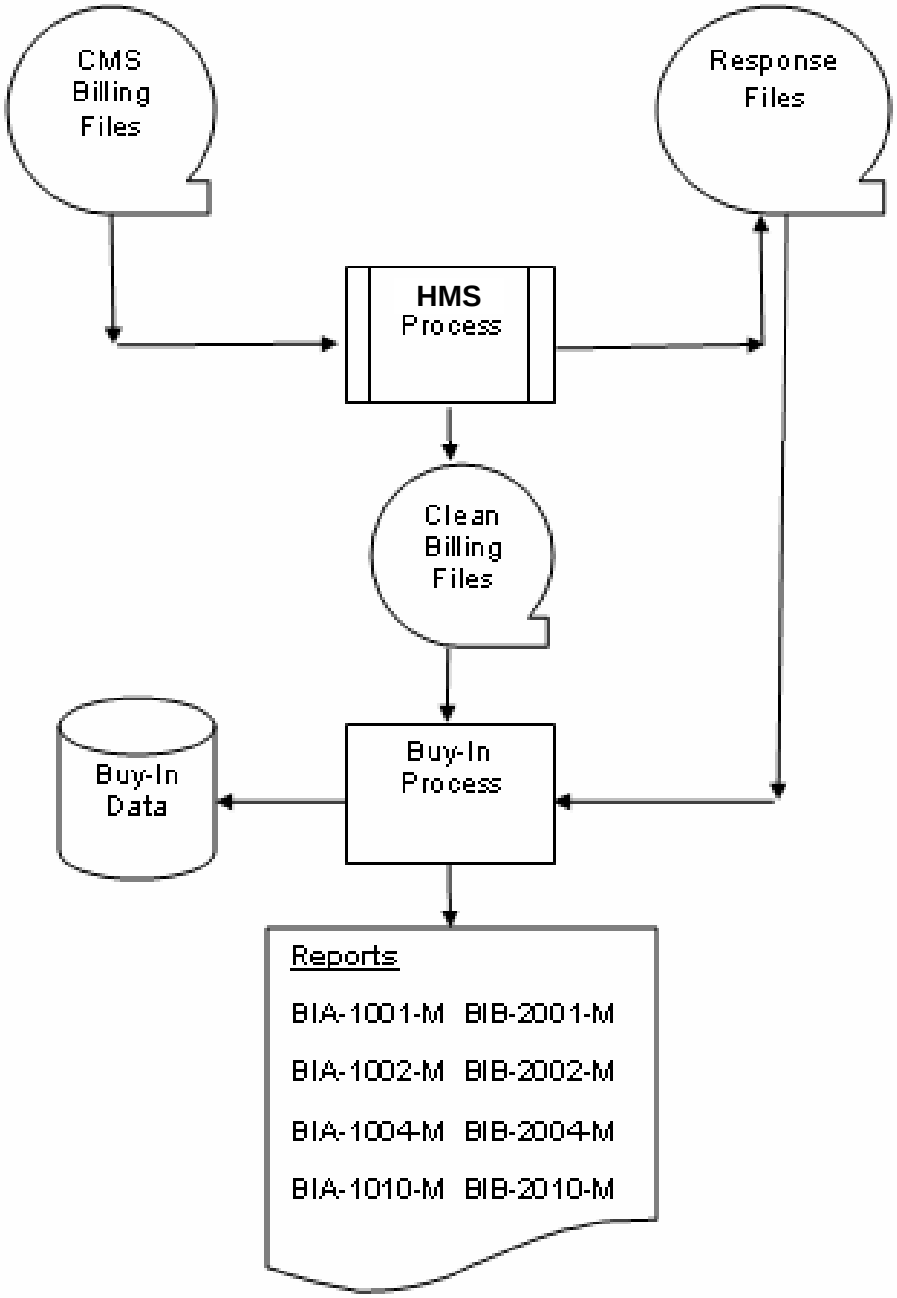

3.3.2 EDB Process Model

Connected via	Connected to	Src	Dst
EDB finder file	Center for Medicare and Medicaid Services (CMS, external entity.)		X
Enrollment Database file (EDB)	Commonwealth Office of Technology	X	

3.3.2.1 Process Description

The Center for Medicare and Medicaid Services (CMS) sends an enrollment file of Medicare-eligible members.

3.3.2.2 interChange Narrative

On a monthly basis, iC creates a “finder file” of all active members. This file is transmitted to CMS for review and determination of Medicare eligibility.

CMS sends an enrollment file of active Medicare members. The members are found in the MMIS using the date of birth, SSN, sex and name. When a match is found:

- Medicare enrollment information for the member is added, updated or terminated appropriately; and,
- The record is entered into T_RE_PS2_LOG and T_RE_PS2_ERR (as appropriate) using source code “EDB”.

The file is loaded into table T_BUY_EDB and is stored for three months to allow research. The following reports are created:

- EDB Entitlement Errors Report (BUY-5003-M) - Errors encountered during EDB processing;
- EDB Entitlement Update Report (BUY-5004-M) - Members with Medicare eligibility updated;
- EDB Entitlement Shutdown Report (BUY-5005-M) - Members with Medicare eligibility shut down;
- EDB Entitlement Add Report (BUY-5006-M) - Members with new Medicare eligibility;
- EDB Entitlement Bypass Report (BUY-5007-M) - Members bypassed during EDB processing;
- EDB Entitlement Denied Report (BUY-5009-M) - Members with Medicare eligibility denied;
- EBD-HIC Cross-Reference Report (BUY-5008-M) - Cross-reference listing report; and,
- EDB Missing Sequence Report (BUY-5010-M) - List of members sent in the finder file not sent back in the EDB file.

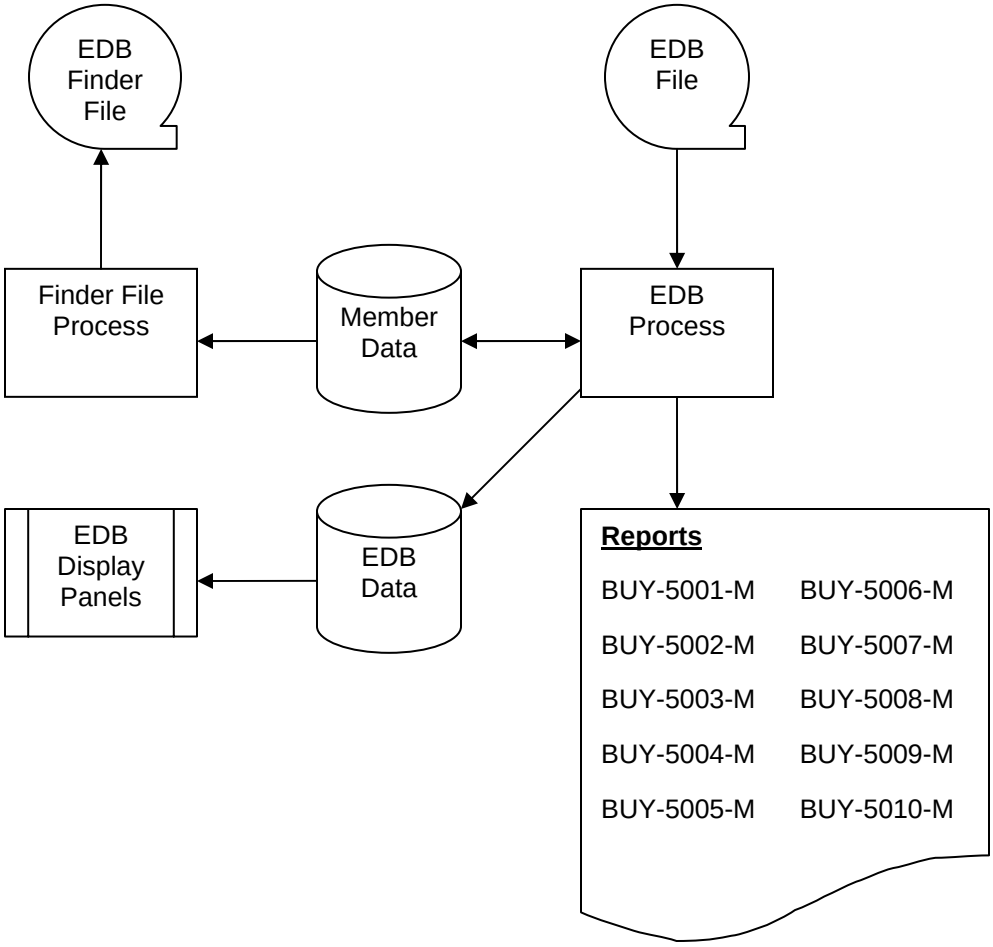

3.3.3 Member Extract to PCG Process Model

Connected via	Connected to	Src	Dst
Member extract file	Public Consulting Group (PCG)		X

3.3.3.1 Process Description

interChange transmits an extract of member data to HMS. Data includes, name, address, SSN, date of birth, race, gender, eligibility, LTC, lockin and financial data. All members, active or not, are extracted to this file. This file is generated automatically, without panels for modification or viewing. The file layout is the mainframe-version of the member master file.

3.3.3.2 interChange Narrative

On a daily basis, iC creates a member extract of all active members. This file is transmitted to HMS to use in determining Buy-In eligibility. No reports are produced.

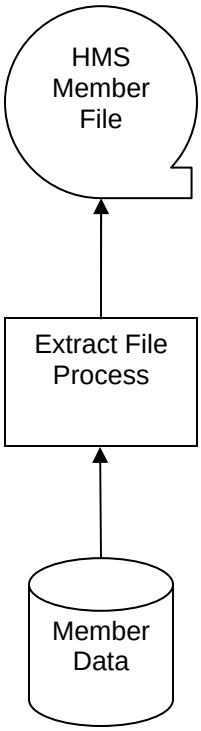
HMS
Member
File
Extract File
Process
Member
Data

3.4 Buy-In Data Maintenace Data Model

3.4.1 Database Entity Relationships

The following data model gives an introduction view of the tables/entities within this subsystem.

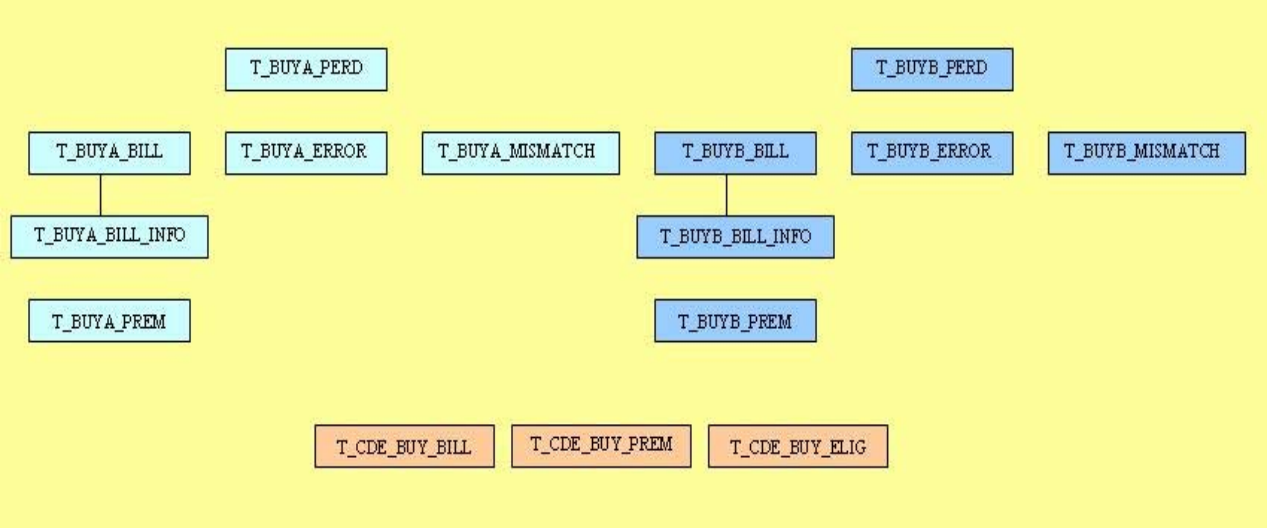

3.4.2 External System Interfaces

The following context diagram provides a view of the entities with which the subsystem interfaces.

3.5 Job Scripts

3.5.1 BIAJM001 - Print Buy-In Part A Billing report

3.5.1.1 Detailed Job Script Information

Unix Script:	BIAJM001
Description:	This job processes the report requests for the Buy-In Part A Billing report.

Job Step:		js 010-bia1001m
Description:		Executes program bia1001m
Input/Output Files:		
bia100101.rpt	O	Buy-In Part A Billing report
Job Step:		js 020-copy2crld
Description:		Produce COLD copy of Buy-In Part A Billing report
Input/Output Files:		
bia100101.rpt	B	Buy-In Part A Billing report

3.5.2 BIAJM002 - Print the Buy-In Part A List of Transactions Sent to Baltimore (Sending) report

3.5.2.1 Detailed Job Script Information

Unix Script:	BIAJM002
Description:	This job processes the report requests for the Buy-In Part A List of Transactions Sent to Baltimore report.

Job Step:		js 010-bia1002m
Description:		Executes program bia1002m
Input/Output Files:		
bia100201.rpt	O	Buy-In Part A List of Transactions Sent to Baltimore report.
Job Step:		js 020-copy2crld
Description:		Buy-In Part A List of Transactions Sent to Baltimore report.
Input/Output Files:		
bia100201.rpt	B	Buy-In Part A List of Transactions Sent to Baltimore report.

3.5.3 BIAJM004 - Buy-In Part A Exception Error By Transaction Code

3.5.3.1 Detailed Job Script Information

Unix Script:	BIAJM004
Description:	This job processes the report requests for the Buy-In Part A Exception Error By Transaction Code report.

Job Step:		js 010-bia1004m
Description:		Buy-In Part A Exception Error By Transaction Code
Input/Output Files:		
bia100401.rpt	O	Buy-In Part A Exception Error By Transaction Code.
Job Step:		js 020-copy2crld
Description:		Creates a COLD copy.
Input/Output Files:		
bia100401.rpt	B	Buy-In Part A Exception Error By Transaction Code.

3.5.4 BIAJM010 - Buy-In Part A Expenditure report

3.5.4.1 Detailed Job Script Information

Unix Script:	BIAJM010	
Description:	This job processes the report requests for the Buy-In Part A Expenditure report.	
Job Step:		js 010-bia1010m
Description:		Create the report
Input/Output Files:		
bia101001.rpt	O	Buy-In Part A Expenditure report
Job Step:		js 020-copy2crld
Description:		Create a COLD copy
Input/Output Files:		
bia101001.rpt	B	Buy-In Part A Expenditure report

3.5.5 BIAJM011 - Print Buy-In Part A State Totals by Member Population report

3.5.5.1 Detailed Job Script Information

Unix Script:	BIAJM011
Description:	This job processes the report requests for the Buy-In Part A State Totals by Member Population.

Job Step:		js 010-bia1011m
Description:		Executes program bia1011m
Input/Output Files:		
bia101101.rpt	O	Buy-In Part A State Totals by Member Population
Job Step:		js 020-copy2routedir
Description:		Produce COLD copy of Buy-In Part A State Totals by Member Population
Input/Output Files:		
bia101101.rpt	B	Buy-In Part A State Totals by Member Population

3.5.6 BIAJM012 - Print Buy-In Part A Conditional report

3.5.6.1 Detailed Job Script Information

Unix Script:	BIAJM012	
Description:	This job processes the report requests for the Buy-In Part A Conditional report.	
Job Step:		js 010-bia1012m
Description:		Executes program bia1012m
Input/Output Files:		
bia101201.rpt	O	Buy-In Part A Conditional report
Job Step:		js 020-copy2routedir
Description:		Produce COLD copy of Buy-In Part A Conditional report
Input/Output Files:		
bia101201.rpt	B	Buy-In Part A Conditional report

3.5.7 BIAJM013 - Buy-In Part A Premium Totals

3.5.7.1 Detailed Job Script Information

Unix Script:	BIAJM013
Description:	This job processes the report requests for the Buy-In Part A Premium Totals report.

Job Step:		js 010-bia1013m
Description:		Create the report
Input/Output Files:		
bia101301.rpt	O	Buy-In Part A Premium Totals report
Job Step:		js 020-copy2routedir
Description:		Copy report to permanent storage
Input/Output Files:		
bia101301.rpt	I	Buy-In Part A Premium Totals report

3.5.8 BIBJM001 - Print Buy-In Part B Billing report

3.5.8.1 Detailed Job Script Information

Unix Script:	BIBJM001	
Description:	This job processes the report requests for the Buy-In Part B Billing report.	
Job Step:		js 010-bib2001m
Description:		Executes program bib2001m
Input/Output Files:		
bib200101.rpt	O	Buy-In Part B Billing report
Job Step:		js 020-copy2routedir
Description:		Produce COLD copy of Buy-In Part B Billing report
Input/Output Files:		
bib200101.rpt	B	Buy-In Part B Billing report

3.5.9 BIBJM002 - Print the Buy-In Part B List of Transactions Sent to Baltimore (Sending) report.

3.5.9.1 Detailed Job Script Information

Unix Script:	BIBJM002
Description:	This job processes the report requests for the Buy-In Part B List of Transactions Sent to Baltimore report.

Job Step:		js 010-bib2002m
Description:		Creates the Buy-In Part B List of Transactions Sent to Baltimore report
Input/Output Files:		
bib200201.rpt	O	Buy-In Part B List of Transactions Sent to Baltimore report.
Job Step:		js 020-copy2routedir
Description:		Produce a COLD copy of Buy-In Part B List of Transactions Sent to Baltimore report.
Input/Output Files:		
bib200201.rpt	B	Buy-In Part B List of Transactions Sent to Baltimore report.

3.5.10 BIBJM004 - Buy-In Part B Exception Error By Transaction Code

3.5.10.1 Detailed Job Script Information

Unix Script:	BIBJM004
Description:	This job processes the report requests for the Buy-In Part B Exception Error By Transaction Code report.

Job Step:		js 010-bib2004m
Description:		Execute bib2004m.sc - Create Buy-In Part B Planned Deletions report.
Input/Output Files:		
bib200401.rpt	O	Buy-In Part B Exception Error By Transaction Code
Job Step:		js 020-copy2routedir
Description:		Creates a COLD copy.
Input/Output Files:		
bib200401.rpt	B	Buy-In Part B Exception Error By Transaction Code

3.5.11 BIBJM010 - Buy-In Part B Expenditure report

3.5.11.1 Detailed Job Script Information

Unix Script:	BIBJM010	
Description:	This job processes the report requests for the Buy-In Part B Expenditure report.	
Job Step:		js 010-bib2010m
Description:		Creates the Buy-In Part B Expenditure report.
Input/Output Files:		
bib201001.rpt	O	The Buy-In Part B Expenditure report
Job Step:		js 020-copy2routedir
Description:		Create a COLD copy
Input/Output Files:		
bib201001.rpt	B	The Buy-In Part B Expenditure report

3.5.12 BIBJM011 - Buy-In Part B State Totals By Member Population

3.5.12.1 Detailed Job Script Information

Unix Script:	BIBJM011
Description:	This job processes the report requests for the Buy-In Part B State Totals by Member Population report.

Job Step:		js 010- tpl0021m
Description:		Create Buy-In Part B State Totals By Member Population report.
Input/Output Files:		
bib201101.rpt	O	Buy-In Part B State Totals by Member Population report.
Job Step:		js 020-copy2routedir
Description:		Creates a COLD copy.
Input/Output Files:		
bib201101.rpt	B	Buy-In Part B State Totals by Member Population report.

3.5.13 BIBJM013 - Buy-In Part B Premium Totals

3.5.13.1 Detailed Job Script Information

Unix Script:	BIBJM013
Description:	This job processes the report requests for the Buy-In Part B Premium Totals report.

Job Step:		js 010-bib2013m
Description:		Creates the Buy-In Part B Premium Totals report.
Input/Output Files:		
bib201301.rpt	O	Buy-In Part B Premium Totals report
Job Step:		js 020-copy2routedir
Description:		Create a COLD copy
Input/Output Files:		
bib201301.rpt	B	Buy-In Part B Premium Totals report

3.5.14 BUYENDJM - Buy-in Month End Parm Job Script

3.5.14.1 Detailed Job Script Information

Unix Script:	BUYENDJM
Description:	This job sets the database parameters for the following month.

Job Step:	js 010-sqlldr
Description:	Update the AIMCYCLE table.
Input/Output Files:	

3.5.15 BUYJD603 - Daily Extract for KMAA

3.5.15.1 Detailed Job Script Information

Unix Script:	BUYJD603
Description:	This batch process runs daily to extract all changes performed that day, format them in a format usable by KMAA, and transmit them.

Job Step:	js 010-buypd603
Description:	Produce the extract file

Input/Output Files:		
buyd_actions.dat.kmaa	O	Buy-In extract file for KMAA

3.5.16 BUYJM001 - Print Possible Medicare Eligible report

3.5.16.1 Detailed Job Script Information

Unix Script:	BUYJM001
Description:	This job processes the report requests for the Buy-In Possible Medicare Eligibles report.

Job Step:		js 010-buy3001m
Description:		Executes buy3001m C program
Input/Output Files:		
buy300101.rpt	O	Possible Medicare Eligibles
Job Step:		js 020-copy2routedir
Description:		Produces a copy to COLD for the Buy-in Possible Medicare Eligibles report
Input/Output Files:		
buy300101.rpt	B	Possible Medicare Eligibles

3.5.17 BUYJM152 - EDB Missing Sequence report

3.5.17.1 Detailed Job Script Information

Unix Script:	BUYJM152
Description:	This batch job produces the EDB Missing Sequence report and routes it to OnBase.

Job Step:		js 010-elgpm152
Description:		Produce the report.
Input/Output Files:		
buym_edbfinder.dat.cms	I	Buy-In EDB extract file
buym0522.rpt	O	Missing seq report file
Job Step:		js 020-copy2routedir
Description:		Route the report
Input/Output Files:		
buym0522.rpt	I	Missing seq report file

3.5.18 BUYJM401 - Buy-In Billing Process Error report

3.5.18.1 Detailed Job Script Information

Unix Script:	BUYJM401	
Description:	This batch job produced the Billing Process Error report and routes it to storage.	
Job Step:		js 010-buypm401
Description:		Produces the BUY-4001-M report.
Input/Output Files:		
buym4001.rpt	O	Buy-In BUY-4001-M report file
Job Step:		js 020-copy2crld
Description:		Copy to long-term storage.
Input/Output Files:		
buym4001.rpt	I	Buy-In BUY-4001-M report file

3.5.19 BUYJM403 - Buy-In Original ID Change report

3.5.19.1 Detailed Job Script Information

Unix Script:	BUYJM403	
Description:	This job produces the BUY-4003-M report.	
Job Step:		js 010-buypm403
Description:		Produce the report.
Input/Output Files:		
buym4003.rpt	O	Buy-In BUY-4003-M report file
Job Step:		js 020-copy2crld
Description:		Send report to storage.
Input/Output Files:		
buym4003.rpt	I	Buy-In BUY-4003-M report file

3.5.20 BUYJM404 - Buy-In Death report

3.5.20.1 Detailed Job Script Information

Unix Script:	BUYJM404	
Description:	This job produces the BUY-4004-M report and routes it to storage.	
Job Step:		js 010-buypm404
Description:		Produce the report.
Input/Output Files:		
buym4004.rpt	O	Buy-In BUY-4004-M report file
Job Step:		js 020-copy2crld
Description:		Copy report to storage.
Input/Output Files:		
buym4004.rpt	I	Buy-In BUY-4004-M report file

3.5.21 BUYJM405 - Buy-In Accretion report

3.5.21.1 Detailed Job Script Information

Unix Script:	BUYJM405	
Description:	This job produces the BUY-4005-M report and routes it to storage.	
Job Step:		js 010-buypm405
Description:		Produce the report.
Input/Output Files:		
buym4005.rpt	O	Buy-In BUY-4005-M report file
Job Step:		js 020-copy2crld
Description:		Copy report to storage.
Input/Output Files:		
buym4005.rpt	I	Buy-In BUY-4005-M report file

3.5.22 BUYJM406 - Buy-In Transactions to CMS Summary report

3.5.22.1 Detailed Job Script Information

Unix Script:	BUYJM406	
Description:	This job produces the BUY-4006-M report and routes it to storage.	
Job Step:		js 010-buypm406
Description:		Produce the report.
Input/Output Files:		
buym4006.rpt	O	Buy-In BUY-4006-M report file
Job Step:		js 020-copy2crld
Description:		Copy report to storage.
Input/Output Files:		
buym4006.rpt	I	Buy-In BUY-4006-M report file

3.5.23 BUYJM407 - Buy-In Manual Transactions Submitted report

3.5.23.1 Detailed Job Script Information

Unix Script:	BUYJM407	
Description:	This job produces the BUY-4007-M report and routes it to storage.	
Job Step:		js 010-buypm407
Description:		Produce the report.
Input/Output Files:		
buym4007.rpt	O	Buy-In BUY-4007-M report file
Job Step:		js 020-copy2crld
Description:		Copy the report to storage.
Input/Output Files:		
buym4007.rpt	I	Buy-In BUY-4007-M report file

3.5.24 BUYJM408 - Buy-In Matching Transactions report

3.5.24.1 Detailed Job Script Information

Unix Script:	BUYJM408	
Description:	Produce report BUY-4008-M and route it to storage.	
Job Step:		js 010-buypm408
Description:		Produce the report.
Input/Output Files:		
buym4007.rpt	O	Buy-In BUY-4007-M report file
Job Step:		js 020-copy2crld
Description:		Copy to storage.
Input/Output Files:		
buym4008.rpt	I	Buy-In BUY-4008-M report file

3.5.25 BUYJM409 - Buy-In Recipients Not Billed report

3.5.25.1 Detailed Job Script Information

Unix Script:	BUYJM409	
Description:	This job produces the BUY-4009-M report and route it to storage.	
Job Step:		js 010-buypm409
Description:		Produce the report.
Input/Output Files:		
buym4009.rpt	O	Buy-In BUY-4009-M report file
Job Step:		js 020-copy2crld
Description:		Copy the report to storage.
Input/Output Files:		
buym4009.rpt	I	Buy-In BUY-4009-M report file

3.5.26 BUYJM410 - Buy-In Unmatched Recipients Billed report

3.5.26.1 Detailed Job Script Information

Unix Script:	BUYJM410	
Description:	This job produces the BUY-4010-M report and routes it to storage.	
Job Step:		js 010-buypm410
Description:		Produce the report.
Input/Output Files:		
buym4010.rpt	O	Buy-In BUY-4010-M report file
Job Step:		js 020-copy2crld
Description:		Copy to storage.
Input/Output Files:		
buym4010.rpt	I	Buy-In BUY-4010-M report file

3.5.27 BUYJM411 - Buy-In Misc Debit/Credit report

3.5.27.1 Detailed Job Script Information

Unix Script:	BUYJM411	
Description:	This batch job produces the BUY-4011-M report and routes it to storage.	
Job Step:		js 010-buypm411
Description:		Produce the report.
Input/Output Files:		
buym4011.rpt	O	Buy-In BUY-4011-M report file
Job Step:		js 020-copy2crld
Description:		Copy to storage.
Input/Output Files:		
buym4011.rpt	I	Buy-In BUY-4011-M report file

3.5.28 BUYJM431 - MMA Outbound reports

3.5.28.1 Detailed Job Script Information

Unix Script:	BUYJM431
Description:	This job produces the BUY-4310-M and BUY-4311-M reports and routes them to OnBase.

Job Step:		js 010-otsortd
Description:		Sort the MMA file
Input/Output Files:		
elm600p.dat	I	Part D enrollment file for CMS
buym_mma_outbound.srt	O	This is a temporary sorted file.
Job Step:		js 020-buypm431
Description:		Produce the reports
Input/Output Files:		
buym_mma_outbound.srt	I	This is a temporary sorted file.
buym4310.rpt	O	MMA Outbound Transactions report
buym4311.rpt	O	MMA LIS Outbound Transactions report

3.5.29 BUYJM508 - EDB-HIC Cross Reference report

3.5.29.1 Detailed Job Script Information

Unix Script:	BUYJM508	
Description:	This job produces the BUY-5008-M report and routes it to storage.	
Job Step:		js 010-buypm508
Description:		Produce the report.
Input/Output Files:		
buym5008.rpt	O	Buy-In BUY-5008-M report file
Job Step:		js 020-copy2crld
Description:		Copy report to storage.
Input/Output Files:		
buym5008.rpt	I	Buy-In BUY-5008-M report file

3.5.30 BUYJM523 - EDB Processing reports

3.5.30.1 Detailed Job Script Information

Unix Script:	BUYJM523	
Description:	This job produces the EDB processing reports report and routes them to storage.	
Job Step:		js 010-buypm523
Description:		Produce the Errors report.
Input/Output Files:		
buym5003.rpt	O	Buy-In BUY-5003-M report file
Job Step:		js 020-buypm523
Description:		Produce the Update report.
Input/Output Files:		
buym5004.rpt	O	Buy-In BUY-5004-M report file
Job Step:		js 030-buypm523
Description:		Produce the Shutdown report.
Input/Output Files:		
buym5005.rpt	O	Buy-In BUY-5005-M report file
Job Step:		js 040-buypm523
Description:		Produce the Adds report.
Input/Output Files:		
buym5006.rpt	O	Buy-In BUY-5006-M report file
Job Step:		js 050-buypm523
Description:		Produce the Bypass report.
Input/Output Files:		
buym5007.rpt	O	Buy-In BUY-5007-M report file
Job Step:		js 060-buypm523
Description:		Produce the Denied report.
Input/Output Files:		

buym5009.rpt	O	Buy-In BUY-5009-M report file
Job Step:		js 070-copy2crld
Description:		Copy report to storage.
Input/Output Files:		
buym5003.rpt	I	Buy-In BUY-5003-M report file
buym5004.rpt	I	Buy-In BUY-5004-M report file
buym5005.rpt	I	Buy-In BUY-5005-M report file
buym5006.rpt	I	Buy-In BUY-5006-M report file
buym5007.rpt	I	Buy-In BUY-5007-M report file
buym5009.rpt	I	Buy-In BUY-5009-M report file

3.5.31 BUYJM600 - PCG Buy-In Reconciliation File

3.5.31.1 Detailed Job Script Information

Unix Script:	BUYJM600	
Description:	This job script produces the Buy-In activity file for transmission to HMS.	
Job Step:		js 010-buypm600
Description:		Produce the file
Input/Output Files:		
buy_recon.dat.pcg	O	Buy-In PCG Recon File

3.5.32 BUYJM603 - Process PCG Input Files

3.5.32.1 Detailed Job Script Information

Unix Script:	BUYJM603
Description:	This process takes the Part A and Part B input files created by HMS and loads them into the iC database as if iC had created the rows.

Job Step:		js 010-buypm603
Description:		Process the input files
Input/Output Files:		
buy_a_send_pcg.dat	I	PCG Part A input file.
buy_b_send_pcg.dat	I	PCG Part B Input file

3.5.33 BUYJM605 - Buy-In PCG Billing File Update

3.5.33.1 Detailed Job Script Information

Unix Script:	BUYJM605	
Description:	This batch file processes the billing files produced by HMS.	
Job Step:		js 010-cut
Description:		Extract the Medicaid IDs from the billing files
Input/Output Files:		
buy_a_bill_pcg.dat	I	Part A billing file from HMS
buy_b_bill_pcg.dat	I	Part B billing file from HMS
buyin_pcg_rids.dat	O	Temporary file for processing HMS billing files.
Job Step:		js 020-sqlplus
Description:		Drop and recreate the temporary table T_TMP_BUYPM605
Input/Output Files:		
Job Step:		js 030-sqlldr
Description:		Load the temporary table from the Medicaid IDs
Input/Output Files:		
buyin_pcg_rids.dat	I	Temporary file for processing HMS billing files.
Job Step:		js 040-sqlplus
Description:		Index the temporary table
Input/Output Files:		
Job Step:		js 050-buypm605
Description:		Process the files.
Input/Output Files:		
buy_a_bill_pcg.dat	I	Part A billing file from HMS
buy_b_bill_pcg.dat	I	Part B billing file from HMS
t_buya_bill.dat	O	Temporary file for loading table T_BUYA_BILL.
t_buya_bill_info.dat	O	Temporary file for loading table T_BUYA_BILL_INFO.

t_buya_demo_change.dat	O	Temporary file for loading table T_BUYA_DEMO_CAHNGE.
t_buya_error.dat	O	Temporary file for loading table T_BUYA_ERROR.
t_buya_except.dat	O	Temporary file for loading table T_BUYA_EXCEPT.
t_buya_mismatch.dat	O	Temporary file for loading table T_BUYA_MISMATCH.
t_buya_perd.dat	O	Temporary file for loading table T_BUYA_PERD.
t_buyb_bill.dat	O	Temporary file for loading table T_BUYB_BILL.
t_buyb_bill_info.dat	O	Temporary file for loading table T_BUYB_BILL_INFO.
t_buyb_demo_change.dat	O	Temporary file for loading table T_BUYB_DEMO_CHANGE.
t_buyb_error.dat	O	Temporary file for loading table T_BUYB_ERROR.
t_buyb_mismatch.dat	O	Temporary file for loading table T_BUYB_MISMATCH.
t_buyb_perd.dat	O	Temporary file for loading table T_BUYB_PERD.
Job Step:		js 060-sqlldr
Description:		Load table T_BUYA_BILL
Input/Output Files:		
t_buya_bill.dat	I	Temporary file for loading table T_BUYA_BILL.
Job Step:		js 070-sqlldr
Description:		Load table T_BUYA_BILL_INFO
Input/Output Files:		
t_buya_bill_info.dat	I	Temporary file for loading table T_BUYA_BILL_INFO.
Job Step:		js 080-sqlldr
Description:		Load table T_BUYA_DEMO_CHANGE
Input/Output Files:		
t_buya_demo_change.dat	I	Temporary file for loading table T_BUYA_DEMO_CAHNGE.
Job Step:		js 090-sqlldr
Description:		Load table T_BUYA_ERROR
Input/Output Files:		

t_buya_error.dat	I	Temporary file for loading table T_BUYA_ERROR.
Job Step:		js 100-sqlldr
Description:		Load table T_BUYA_MISMATCH
Input/Output Files:		
t_buya_mismatch.dat	I	Temporary file for loading table T_BUYA_MISMATCH.
Job Step:		js 110-sqlldr
Description:		Load table T_BUYA_PERD
Input/Output Files:		
t_buya_perd.dat	I	Temporary file for loading table T_BUYA_PERD.
Job Step:		js 120-sqlldr
Description:		Load table T_BUYB_BILL
Input/Output Files:		
t_buyb_bill.dat	I	Temporary file for loading table T_BUYB_BILL.
Job Step:		js 130-sqlldr
Description:		Load table T_BUYB_BILL_INFO
Input/Output Files:		
t_buyb_bill_info.dat	I	Temporary file for loading table T_BUYB_BILL_INFO.
Job Step:		js 140-sqlldr
Description:		Load table T_BUYB_DEMO_CHANGE
Input/Output Files:		
t_buyb_demo_change.dat	I	Temporary file for loading table T_BUYB_DEMO_CHANGE.
Job Step:		js 150-sqlldr
Description:		Load table T_BUYB_ERROR
Input/Output Files:		
t_buyb_error.dat	I	Temporary file for loading table T_BUYB_ERROR.
Job Step:		js 160-sqlldr
Description:		Load table T_BUYB_MISMATCH

Input/Output Files:		
t_buyb_mismatch.dat	I	Temporary file for loading table T_BUYB_MISMATCH.
Job Step:		js 170-sqlldr
Description:		Load table T_BUYB_PERD
Input/Output Files:		
t_buyb_perd.dat	I	Temporary file for loading table T_BUYB_PERD.
Job Step:		js 180-sqlldr
Description:		Load table T_BUYA_EXCEPT
Input/Output Files:		
t_buya_except.dat	I	Temporary file for loading table T_BUYA_EXCEPT.
Job Step:		js 190-sqlldr
Description:		Load table T_BUYB_EXCEPT
Input/Output Files:		
t_buyb_perd.dat	I	Temporary file for loading table T_BUYB_PERD.

3.5.34 BUYJM_MMAENROLL - Part D Current Enrollments

3.5.34.1 Detailed Job Script Information

Unix Script:	BUYJM_MMAENROLL	
Description:	This job creates a temporary file of Part D/MMA enrollments for the current month.	
Job Step:		js 010-rm
Description:		Remove the old temp file (if it exists)
Input/Output Files:		
buym_mma_enroll.tmp	I	Part D current enrollment file
Job Step:		js 020-buypmMMAEnroll
Description:		Create new file
Input/Output Files:		
buym_mma_enroll.tmp	O	Part D current enrollment file

3.5.35 BUYJM_MMAMERGE - Part D Outbound Processing

3.5.35.1 Detailed Job Script Information

Unix Script:	BUYJM_MMAMERGE	
Description:	This job builds the file for transmission to CMS.	
Job Step:		js 010-otsortd
Description:		Sort and combine files
Input/Output Files:		
buym_mma_enroll.tmp	I	Part D current enrollment file
buym_mma_recon.tmp	I	Part D changes to retroactive enrollments file
buym_mma_reotr.tmp	I	Part D retroactive enrollment file
buym_mma_merge.tmp	O	Part D combined file
Job Step:		js 020-buypmMMAMerge
Description:		Add the header and trailer records
Input/Output Files:		
buym_mma_merge.tmp	I	Part D combined file
elm600p.dat	O	Part D enrollment file for CMS

3.5.36 BUYJM_MMARECON - Part D Adjustments to Previous Enrollments

3.5.36.1 Detailed Job Script Information

Unix Script:	BUYJM_MMARECON
Description:	This job reviews previous successful enrollments for changes needed and produces a temp file of the results.

Job Step:		js 010-rm
Description:		Remove the old temporary file (if exists).
Input/Output Files:		
buym_mma_recon.tmp	I	Part D changes to retroactive enrollments file
Job Step:		js 020-buypmMMARecon
Description:		Produce the temporary file
Input/Output Files:		
buym_mma_recon.tmp	I	Part D changes to retroactive enrollments file

3.5.37 BUYJM_MMARETRO - Part D Retroactive Enrollments

3.5.37.1 Detailed Job Script Information

Unix Script:	BUYJM_MMARETRO	
Description:	This job produces a temp file of retroactive Part D/MMA enrollments.	
Job Step:		js 010-rm
Description:		Remove the old temp file (if it exists).
Input/Output Files:		
buym_mma_reotr.tmp	I	Part D retroactive enrollment file
Job Step:		js 020-buypmMMARetro
Description:		Produce the temporary file.
Input/Output Files:		
buym_mma_reotr.tmp	O	Part D retroactive enrollment file

3.5.38 ELGJD111 - Part D Daily Reconciliation

3.5.38.1 Detailed Job Script Information

Unix Script:	ELGJD111
Description:	Reconcile Part D eligibility dates with changes in underlying program eligibility.

Job Step:	js 010-elgpd05m
Description:	Update the date information
Input/Output Files:	

3.5.39 ELGJM150 - Process EDB file

3.5.39.1 Detailed Job Script Information

Unix Script:	ELGJM150	
Description:	This job script processes the EDB file from CMS.	
Job Step:		js 010-cp
Description:		Copy the inbound file to GDG
Input/Output Files:		
buym_edbreturn.dat	I	EDB file
elm0150.dat	O	GDG backup of the incoming EDB file
Job Step:		js 020-sqlplus
Description:		Remove EDB entries from T_RE_PS2_LOG and T_RE_PS2_ERR
Input/Output Files:		
Job Step:		js 030-elgpm150
Description:		Process the file.
Input/Output Files:		
elm0150.dat	I	GDG backup of the incoming EDB file
Job Step:		js 040-rm
Description:		Remove the inbound file
Input/Output Files:		
buym_edbreturn.dat	I	EDB file

3.5.40 ELGJM153 - EDB Extract File

3.5.40.1 Detailed Job Script Information

Unix Script:	ELGJM153
Description:	This batch file produces an extract of active Medicaid recipients and transmits it to CMS.

Job Step:		js 010-elgpm153
Description:		Extract the data
Input/Output Files:		
buym_edbfinder.dat.cms	O	Buy-In EDB extract file

3.5.41 ELGJM650 - Part D Inbound Processing

3.5.41.1 Detailed Job Script Information

Unix Script:	ELGJM650
Description:	This job script processes the incoming Part D response file and produces the processing reports.

Job Step:		js 005-cp
Description:		Copy the incoming file to a gdg backup
Input/Output Files:		
elm600r.dat	I	Part D Enrollment File
elm600r.dat.nnnn gdg	O	Part D Enrollment Historical Backup file
Job Step:		js 010-elgpm650
Description:		Process the incoming file, produce report ELG-0650-M report.
Input/Output Files:		
elm600r.dat	I	Part D Enrollment File
elm65001.rpt	O	Part D MMA File Error report
elm65002.dat	O	Data file for date mismatch report
elm65003.dat	O	Data file for PDP Errors report
Job Step:		js 020-otsortd
Description:		Sort the temporary file
Input/Output Files:		
elm65002.dat	I	Data file for date mismatch report
elm65002.srt	O	Sorted data file for date mismatch report
Job Step:		js 030-elgpm660
Description:		Produce the ELG-0660-M report
Input/Output Files:		
elm65002.srt	I	Sorted data file for date mismatch report
elm65002.rpt	O	Part D date mismatch report

Job Step:		js 040-otsortd
Description:		Sort the temporary file
Input/Output Files:		
elm65003.dat	I	Data file for PDP Errors report
elm65003.srt	O	Sorted data file for PDP Errors report
Job Step:		js 050-elgpm670
Description:		Produce the ELG-0670-M report
Input/Output Files:		
elm65003.srt	I	Sorted data file for PDP Errors report
elm65003.rpt	O	Part D PDP Errors report
Job Step:		js 060-copy2routedir
Description:		Copy report to OnBase
Input/Output Files:		
elm65001.rpt	I	Part D MMA File Error report
Job Step:		js 070-copy2routedir
Description:		Copy report to OnBase
Input/Output Files:		
elm65002.rpt	I	Part D date mismatch report
Job Step:		js 080-copy2routedir
Description:		Copy report to OnBase
Input/Output Files:		
elm65003.rpt	I	Part D PDP Errors report
Job Step:		js 090-rm
Description:		Remove original file
Input/Output Files:		
elm600r.dat	I	Part D Enrollment File

3.5.42 ELGJM651 - Part D MMA Inbound report

3.5.42.1 Detailed Job Script Information

Unix Script:	ELGJM651	
Description:	This job produces the Part D MMA Inbound report.	
Job Step:		js 010-elgpm651
Description:		Produce the report
Input/Output Files:		
elg06510.dat	I	Part D MMA Inbound report
Job Step:		js 020-copy2routedir
Description:		Copy report to OnBase
Input/Output Files:		
elg06510.dat	I	Part D MMA Inbound report

3.5.43 ELGJM654 - Update Clawback Information

3.5.43.1 Detailed Job Script Information

Unix Script:	ELGJM654
Description:	This batch job updates the T_RE_CLAWBACK table.

Job Step:	js 010-elgpm654
Description:	Update the table.
Input/Output Files:	

3.5.44 ELGJM655 - Print the Clawback report

3.5.44.1 Detailed Job Script Information

Unix Script:	ELGJM655	
Description:	This report prints the ELG-0655-M report.	
Job Step:		js 010-elgpm655
Description:		Create the report
Input/Output Files:		
elm06550.rpt	O	Clawback report
Job Step:		js 020-copy2routedir
Description:		Copy report to storage
Input/Output Files:		
elm06550.rpt	I	Clawback report

3.6 Programs

3.6.1 tpl0021m -- Buy-In Part B State Totals by Beneficiary Population

Technical Name:	tpl0021m
Program Title:	Buy-In Part B State Totals by Beneficiary Population
Programming Language:	C
Description:	The Buy-In Part B State Totals by Beneficiary Population program creates the Buy-In Part B State Totals by Beneficiary Population report.

3.6.1.1 Change Orders

ID	Name	Description
No associated Change Orders found		

3.6.2 bia1001m -- Print Buy-In Part A Billing report

Technical Name:	bia1001m
Program Title:	Print Buy-In Part A Billing report
Programming Language:	C
Description:	The Print Buy-In Part A Billing report program creates the Buy-In Part A Billing report. Input Parameters: Period (start and end date) for DTE_BUY_PROC is retrieved from the command-line. If no date is provided, the first and the last day of the month for which the report is run are used. **Exit Value:** 0 - normal termination 1 - abnormal termination **Input Parameters:** Period (start and end date) for DTE_BUY_PROC is retrieved from the command-line. If no date is provided, the first and the last day of the month for which the report is run are used. **Exit Values:** EXIT_SUCCESS - Normal termination EXIT_FAILURE - Abnormal termination because of open, read, allocation, or input errors **Input Files:** None **Output Files:** bia100101.rpt **Input Tables:** T_BUYA_BILL T_BUYA_BILL_INFO T_RE_BASE T_BUYA_MISMATCH T_BUYA_ERROR **Output Tables:** None **Sort Criteria:** T_BUYA_BILL.CDE_BUY_TXN T_BUYA_BILL.CDE_BUY_SUB T_BUYA_BILL.MISC_CDE_DTE T_BUYA_BILL.ID_MEDICARE **Switches:** None at this time

	Link Procedure: libmrpf **Special Logic Notes:** None

3.6.2.1 Change Orders

ID	Name	Description
6861	Modify BIA-1001, BIB-2001	There is a need to modify the BIA-1001-M and BIB-2001-M reports.

3.6.3 bia1002m -- Print the Buy-In Part A List of Transactions Sent to Baltimore (Sending) report

Technical Name:	bia1002m
Program Title:	Print the Buy-In Part A List of Transactions Sent to Baltimore (Sending) report
Programming Language:	C
Description:	This program creates the Buy-In Part A List of Transactions Sent Baltimore (Sending) report. **Input Parameters:** Period (start and end date) for DTE_BUY_PROC is retrieved from the command-line. If no date is provided, the first and the last day of the month for which the report is run are used. **Exit Values:** EXIT_SUCCESS - Normal termination EXIT_FAILURE - Abnormal termination because of open, read, allocation, or input errors **Input Files:** None **Output Files:** bia100201.rpt **Input Tables:** T_BUYA_PREM T_RE_BASE **Output Tables:** None **Sort Criteria:** T_BUYA_PREM.CDE_BUY_TXN T_BUYA_PREM.ID_MEDICARE **Switches:** None at this time **Link Procedure:** libmrpf **Special Logic Notes:** The purpose of the Buy-In Part A List of Transactions Sent to Baltimore report is to notify CMS of any member updates (accretion, deletion, or changes) after the monthly Buy-In Part A billing file is run.

3.6.3.1 Change Orders

ID	Name	Description
2849	Move Core Batch Changes to MO	Occasionally a change is made in the core system code. Use this change order to promote batch program fixes to model office.

3.6.4 bia1004m -- Buy-In Part A Exception Error By Transaction Code

Technical Name:	bia1004m
Program Title:	Buy-In Part A Exception Error By Transaction Code
Programming Language:	C
Description:	This program creates the Buy-In Part A List of Transactions Sent Baltimore (Sending) report. **Input Parameters:** Period (start and end date) for DTE_BUY_PROC is retrieved from the command-line. If no date is provided, the first and the last day of the month for which the report is run are used. **Exit Values:** EXIT_SUCCESS - Normal termination EXIT_FAILURE - Abnormal termination because of open, read, allocation, or input errors **Input Files:** None **Output Files:** bia100401.rpt **Input Tables:** T_BUYA_BILL T_BUYA_BILL_INFO T_RE_BASE T_BUYA_MISMATCH T_BUYA_ERROR **Output Tables:** None **Sort Criteria:** T_BUYA_BILL.CDE_BUY_TXN T_BUYA_BILL.CDE_BUY_SUB T_BUYA_BILL.MISC_CDE_DTE T_BUYA_BILL.ID_MEDICARE **Switches:** None at this time **Link Procedure:** libmrpf **Special Logic Notes:** The following transaction codes always appear on the Buy-In Part A Exception Error By Transaction Code report: 1128, 1728, 20XX, 21XX, 24XX, 25XX, 27XX, 29XX, 30XX, and 31XX. The Buy-in Part

	A transaction codes definition indicates the additional codes that trigger certain records to appear on the Buy-In Part A Exception Error By Transaction Code report. The purpose of the Buy-In Part A Exception Error By Transaction Code report is to identify the above listed codes from CMS. EDS reviews, researches and resolves any problems associated with these codes

3.6.4.1 Change Orders

ID	Name	Description

3064	**Repla Tbl: T_RE_AID_ELIG_STATE**	**There is a need to replace table T_RE_AID_ELIG_STATE with T_RE_AID_ELIG.**

3.6.5 bia1010m -- Buy-In Part A Expenditure report

Technical Name:	bia1010m
Program Title:	Buy-In Part A Expenditure report
Programming Language:	C
Description:	The Buy-In Part A Expenditure report is a monthly listing of Part A Buy-in premium amounts, broken down into sub-program codes and account numbers, then separated into the three fund categories of Federal Match, State Match, and State Only **Input Parameters:** The date in question is retrieved from the command-line. If no date is provided, the first day of the month for which the report is run is used. **Exit Value:** 0 - normal termination 1 - abnormal termination **Input Files:** None **Output File:** bia101001.rpt **Input Tables:** T_BUYA_BILL T_RE_ELIG T_PUB_HLTH_PGM **Output Tables:** None **Sort Criteria:** T_BUYA_BILL.SAK_RECIP T_BUYA_BILL.SAK_BUYIN T_PUB_HLTH_PGM.CDE_HLTH_PGM **Switches:** None **Link Procedure:** Link with mrpf and jdnsdate **Special Logic Notes:** None

3.6.5.1 Change Orders

ID	Name	Description
2849	Move Core Batch Changes to MO	Occasionally a change is made in the core system code. Use this change order to promote batch program fixes to model office.

3.6.6 bia1011m -- Print Buy-In Part A State Totals by Member Population report

Technical Name:	bia1011m
Program Title:	Print Buy-In Part A State Totals by Member Population report
Programming Language:	C
Description:	This program creates the Buy-In Part A State Totals by Member Population report. **Input Parameters:** Period (start and end date) for DTE_BUY_PROC is retrieved from the command-line. If no date is provided, the first and the last day of the month for which the report is run are used. **Exit Value:** 0 - normal termination 1 - abnormal termination **Input File:** None **Output File:** bia101101.rpt **Input Tables:** T_BUYA_BILL T_RE_AID_ELIG T_CDE_AID **Output Tables:** None **Sort Criteria:** T_CDE_AID.CDE_AID_CATEGORY **Switches:** None **Link Procedure:** Link with mrpf **Special Logic Notes:** None

3.6.6.1 Change Orders

ID	Name	Description
3064	Repla Tbl: T_RE_AID_ELIG_STATE	There is a need to replace table T_RE_AID_ELIG_STATE with T_RE_AID_ELIG.

3.6.7 bia1012m -- Buy-In Part A Conditional report services utilization report

Technical Name:	bia1012m
Program Title:	Buy-In Part A Conditional report services utilization report
Programming Language:	C
Description:	This program creates the Buy-In Part A Conditional report. **Input Parameters:** Period (start and end date) for DTE_BUY_PROC is retrieved from the command-line. If no date is provided, the first and the last day of the month for which the report is run are used. **Exit Value:** 0 - normal termination 1 - abnormal termination **Input File:** None **Output File:** bia101201.rpt **Input Tables:** T_BUYA_BILL T_RE_BUYA_BILL_INFO T_RE_BASE T_RE_MEIN_BASE **Output Tables:** None **Sort Criteria:** T_RE_BASE.ID_MEDICAID **Switches:** None **Link Procedure:** Link with mrpf **Special Logic Notes:** none

3.6.7.1 Change Orders

ID	Name	Description
2849	Move Core Batch Changes to MO	Occasionally a change is made in the core system code. Use this change order to promote batch program fixes to model office.

3.6.8 bia1013m -- Buy-In Part A Premium Totals

Technical Name:	bia1013m
Program Title:	Buy-In Part A Premium Totals
Programming Language:	C
Description:	This program creates the Buy-In Part A Premium Totals report. **Input Parameters:** Period (start and end date) for DTE_BUY_PROC is retrieved from the command-line. If no date is provided, the first and the last day of the month for which the report is run are used. **Exit Values:** EXIT_SUCCESS - Normal termination EXIT_FAILURE - Abnormal termination because of open, read, allocation, or input errors **Input Files:** None **Output Files:** bia101301.rpt **Input Tables:** T_BUYA_BILL T_RE_ELIG T_BUYA_MISMATCH **Output Tables:** None **Sort Criteria:** T_BUYA_BILLI.CDE_BUY_TXN T_RE_ELIG.SAK_PUB_HLTH **Switches:** None at this time **Link Procedure:** libmrpf **Special Logic Notes:** None

3.6.8.1 Change Orders

ID	Name	Description
2849	Move Core Batch Changes to MO	Occasionally a change is made in the core system code. Use this change order to promote batch program fixes to model office.
7898	x013 rpts totaling $ incorrectly	Totals column is adding all fields, including negative amounts as absolute value. Ensure program treats credit amounts correctly.

3.6.9 bib2001m -- Print Buy-In Part B Billing report

Technical Name:	bib2001m
Program Title:	Print Buy-In Part B Billing report
Programming Language:	C
Description:	This program creates the Buy-In Part B Billing report. **Input Parameters:** Period (start and end date) for DTE_BUY_PROC is retrieved from the command-line. If no date is provided, the first and the last day of the month for which the report is run are used. **Exit Values:** EXIT_SUCCESS - Normal termination EXIT_FAILURE - Abnormal termination because of open, read, allocation, or input errors **Input Files:** None **Output Files:** bib200101.rpt **Input Tables:** T_BUYB_BILL T_BUYB_BILL_INFO T_RE_BASE T_BUYB_MISMATCH T_BUYB_ERROR **Output Tables:** None **Sort Criteria:** T_BUYB_BILL.CDE_BUY_TXN T_BUYB_BILL.CDE_BUY_SUB T_BUYB_BILL.MISC_CDE_DTE T_BUYB_BILL.ID_MEDICARE **Switches:** None at this time **Link Procedure:** libmrpf **Special Logic Notes:** None

3.6.9.1 Change Orders

ID	Name	Description
6693	Missing ID on report BIB-2001-M	The BIB-2001-M report in Buyin the Medicaid ID is missing from the report. There is no way to identify what member is associated with the data. **03/21/2007 added clarification to indicate BIA-1001-M also applies to this defect.
6861	Modify BIA-1001, BIB-2001	There is a need to modify the BIA-1001-M and BIB-2001-M reports.

3.6.10 bib2002m -- Buy-In Part B List of Transactions Sent to Baltimore (Sending)

Technical Name:	bib2002m
Program Title:	Buy-In Part B List of Transactions Sent to Baltimore (Sending)
Programming Language:	C
Description:	This program creates the Buy-In Part B List of Transactions Sent to Baltimore report. **Input Parameters:** Period (start and end date) for DTE_BUY_PROC is retrieved from the command-line. If no date is provided, the first and the last day of the month for which the report is run are used. **Exit Values:** EXIT_SUCCESS - Normal termination EXIT_FAILURE - Abnormal termination because of open, read, allocation, or input errors **Input Files:** None **Output Files:** bib200201.rpt **Input Tables:** T_BUYB_PREM T_RE_BASE **Output Tables:** None **Sort Criteria:** T_BUYA_PREM.CDE_BUY_TXN T_BUYA_PREM.ID_MEDICARE **Switches:** None at this time **Link Procedure:** libmrpf **Special Logic Notes:** The purpose of the Buy-In Part B List of Transactions Sent to Baltimore report is to notify CMS of any member updates (accretion, deletion, or changes) after the monthly Buy-In Part B billing file is run.

3.6.10.1 Change Orders

ID	Name	Description
2849	Move Core Batch Changes to MO	Occasionally a change is made in the core system code. Use this change order to promote batch program fixes to model office.

3.6.11 bib2004m -- Buy-In Part B Exception Error By Transaction Code

Technical Name:	bib2004m
Program Title:	Buy-In Part B Exception Error By Transaction Code
Programming Language:	C
Description:	This program creates the Buy-In Part B List of Transactions Sent Baltimore (Sending) report. The Buy-In Part B Exception Error By Transaction Code report contains records from the billing file that need to be reviewed for different reasons. **Input Parameters:** Period (start and end date) for DTE_BUY_PROC is retrieved from the command-line. If no date is provided, the first and the last day of the month for which the report is run are used. **Exit Values:** EXIT_SUCCESS - Normal termination EXIT_FAILURE - Abnormal termination because of open, read, allocation, or input errors **Input Files:** None **Output Files:** bib200401.rpt **Input Tables:** T_RE_BASE T_BUYB_BILL T_BUYB_BILL_INFO T_BUYB_MISMATCH T_BUYB_ERROR **Output Tables:** None **Sort Criteria:** T_BUYB_BILL.CDE_BUY_TXN T_BUYB_BILL.CDE_BUY_SUB T_BUYB_BILL.MISC_CDE_DTE T_BUYB_BILL.ID_MEDICARE **Switches:** None at this time **Link Procedure:** libmrpf **Special Logic Notes:** None

3.6.11.1 Change Orders

ID	Name	Description
3064	Repla Tbl: T_RE_AID_ELIG_STATE	There is a need to replace table T_RE_AID_ELIG_STATE with T_RE_AID_ELIG.

3.6.12 bib2010m -- Buy-In Part B Expenditure report

Technical Name:	bib2010m
Program Title:	Buy-In Part B Expenditure report
Programming Language:	C
Description:	The Buy-In Part B Expenditure report is a monthly listing of Part B Buy-in premium amounts, broken down into sub-program codes and account numbers, then separated into the three fund categories of Federal Match, State Match, and State Only **Input Parameters:** Date in question is retrieved from the command-line. If no date is provided, the first day of the month for which the report is run is used. **Exit Value:** 0 - normal termination 1 - abnormal termination **Input Files:** None **Output File:** bib201001.rpt **Input Tables:** T_BUYB_BILL T_RE_ELIG T_PUB_HLTH_PGM **Output Tables:** None **Sort Criteria:** T_BUYB_BILL.SAK_RECIP T_BUYB_BILL.SAK_BUYIN T_PUB_HLTH_PGM.CDE_HLTH_PGM **Switches:** None **Link Procedure:** Link with mrpf and jdnsdate **Special Logic Notes:** None

3.6.12.1 Change Orders

ID	Name	Description
2849	Move Core Batch Changes to MO	Occasionally a change is made in the core system code. Use this change order to promote batch program fixes to model office.

3.6.13 bib2011m -- Print Buy-In Part B State Totals by Member Population report

Technical Name:	bib2011m
Program Title:	Print Buy-In Part B State Totals by Member Population report
Programming Language:	UNIX Command
Description:	This program creates the Buy-In Part B State Totals by Member Population report. **Input Parameters:** Period (start and end date) for DTE_BUY_PROC is retrieved from the command-line. If no date is provided, the first and the last day of the month for which the report is run are used. **Exit Value:** 0 - normal termination 1 - abnormal termination **Input File:** None **Output File:** bib201101.rpt **Input Tables:** T_BUYB_BILL T_RE_AID_ELIG T_CDE_AID **Output Tables:** None **Sort Criteria:** T_CDE_AID.CDE_AID_CATEGORY **Switches:** None **Link Procedure:** Link with mrpf **Special Logic Notes:** None

3.6.13.1 Change Orders

ID	Name	Description
3064	Repla Tbl: T_RE_AID_ELIG_STATE	There is a need to replace table T_RE_AID_ELIG_STATE with T_RE_AID_ELIG.

3.6.14 bib2013m -- Buy-In Part B Premium Totals

Technical Name:	bib2013m
Program Title:	Buy-In Part B Premium Totals
Programming Language:	C
Description:	This program creates the Buy-In Part B Premium Totals report. **Input Parameters:** Period (start and end date) for DTE_BUY_PROC is retrieved from the command-line. If no date is provided, the first and the last day of the month for which the report is run are used. **Exit Values:** EXIT_SUCCESS - Normal termination EXIT_FAILURE - Abnormal termination because of open, read, allocation, or input errors **Input Files:** None **Output Files:** bib201301.rpt **Input Tables:** T_RE_ELIG T_RE_AID_ELIG T_BUYB_BILL T_BUYB_MISMATCH T_CDE_AID T_PUB_HLTH_PGM **Output Tables:** None **Sort Criteria:** None **Switches:** None at this time **Link Procedure:** libmrpf, and libjdnsdate **Special Logic Notes:** None

3.6.14.1 Change Orders

ID	Name	Description
2849	Move Core Batch Changes to MO	Occasionally a change is made in the core system code. Use this change order to promote batch program fixes to model office.
7898	x013 rpts totaling $ incorrectly	Totals column is adding all fields, including negative amounts as absolute value. Ensure program treats credit amounts correctly.

3.6.15 buympm -- Buy-in mismatch program

Technical Name:	buympm
Program Title:	Buy-in mismatch program
Programming Language:	C
Description:	This program handles Mismatched Buy-In Part A and B Transactions created by the current Buy-In Receiving Batch System. Due to a late request by Customer (i.e. at the end of User Acceptance Testing) this program has been created to do the following: Retrieves Buy-In Part A and Part B Mismatches created this month. If Medicaid ID and First/Last Names or Date of Birth matches with values in interChange database: Formats and inserts a new record into table T_BUYA_BILL or T_BUYB_BILL. If the transaction carries a Credit or a Debit, inserts a record into T_BUYA_PERD or T_BUYB_PERD. If any information discrepancies exist, create and insert a record into T_BUYA_BILL_INFO or T_BUYB_BILL_INFO. Delete the record from T_BUYA_MISMATCH/T_BUYB_MISMATCH.

3.6.15.1 Change Orders

ID	Name	Description
No associated Change Orders found		

3.6.16 buypd603 -- Buy-In Extract for KMAA

Technical Name:	buypd603
Program Title:	Buy-In Extract for KMAA
Programming Language:	C
Description:	This program reads the billing and premium tables for Part A and Part B and formats daily changes to transmit to KMAA. **Input Parameters:** None. **Exit values:** EXIT_SUCCESS - Normal termination EXIT_FAILURE - Abnormal termination due to open, read, allocation, or input errors **Input Files:** None **Output Files:** buyd6030.dat **Input Tables:** T_BUYA_BILL T_BUYB_BILL T_BUYA_PREM T_BUYB_PREM T_SYSTEM_PARMS **Output Tables:** None. **Sort Criteria:** None. **Switches:** None at this time **Link Procedures:** libxml and libmrpf **Special Logic Notes:** None.

3.6.16.1 Change Orders

ID	Name	Description
No associated Change Orders found		

3.6.17 buypm401 -- Billing Process Error report

Technical Name:	buypm401
Program Title:	Billing Process Error report
Programming Language:	C
Description:	This program produces the Billing Process Error report. **Input Parameters:** Date range from T_SYSTEM_PARMS where nam_program = 'AIMCYCLE'. **Exit values:** EXIT_SUCCESS - Normal termination EXIT_FAILURE - Abnormal termination due to open, read, allocation, or input errors **Input Files:** NONE **Output Files:** buym4001.rpt **Input Tables:** T_BUYA_BILL T_BUYB_BILL T_RE_BASE **Output Tables:** NONE **Sort Criteria:** ID_MEDICAID **Switches:** None at this time **Link Procedures:** libxml and libmrpf **Special Logic Notes:** NONE

3.6.17.1 Change Orders

ID	Name	Description
476	Billing Process Error report	There is a need to duplicate the KYMQ1200-R001 report.

3.6.18 buypm403 -- Original ID Change report

Technical Name:	buypm403
Program Title:	Original ID Change report
Programming Language:	C
Description:	This program produces the Original ID Change report. **Input Parameters:** Date range from T_SYSTEM_PARMS where nam_program = 'AIMCYCLE'. **Exit values:** EXIT_SUCCESS - Normal termination EXIT_FAILURE - Abnormal termination due to open, read, allocation, or input errors **Input Files:** NONE **Output Files:** buym4003.rpt **Input Tables:** T_BUYA_BILL T_BUYB_BILL T_RE_BASE **Output Tables:** NONE **Sort Criteria:** ID_MEDICAID **Switches:** None at this time **Link Procedures:** libxml and libmrpf **Special Logic Notes:** NONE

3.6.18.1 Change Orders

ID	Name	Description
478	Original ID Change report	There is a need to duplicate the KYMQ1203-R001 report.

ID	Name	Description
7106	Chg 'sex' to 'gender' on rpts	Change the column heading "SEX" (or "S") to "GENDER" (or "G") to conform with other subsystems naming conventions.

3.6.19 buypm404 -- Buy-In Death report

Technical Name:	buypm404
Program Title:	Buy-In Death report
Programming Language:	C
Description:	This program produces the Buy-In Death report. **Input Parameters:** Date range from T_SYSTEM_PARMS where nam_program = 'AIMCYCLE'. **Exit values:** EXIT_SUCCESS - Normal termination EXIT_FAILURE - Abnormal termination due to open, read, allocation, or input errors **Input Files:** NONE **Output Files:** buym4004.rpt **Input Tables:** T_BUYA_BILL T_BUYB_BILL T_RE_BASE **Output Tables:** NONE **Sort Criteria:** ID_MEDICAID **Switches:** None at this time **Link Procedures:** libxml and libmrpf **Special Logic Notes:** NONE

3.6.19.1 Change Orders

ID	Name	Description
4002	4004-M/4008-M Abend	Reports 4004-M and 4008-M are abending.
479	Buy-In Death report	There is a need to duplicate the KYMQ1205-R002 report.

3.6.20 buypm405 -- Buy-In Accrete report

Technical Name:	buypm405
Program Title:	Buy-In Accrete report
Programming Language:	C
Description:	This program produces the Buy-In Accrete report. **Input Parameters:** Date range from T_SYSTEM_PARMS where nam_program = 'AIMCYCLE'. **Exit values:** EXIT_SUCCESS - Normal termination EXIT_FAILURE - Abnormal termination due to open, read, allocation, or input errors **Input Files:** NONE **Output Files:** buym4005.rpt **Input Tables:** T_BUYA_BILL T_BUYB_BILL T_RE_BASE **Output Tables:** NONE **Sort Criteria:** ID_MEDICAID **Switches:** None at this time **Link Procedures:** libxml and libmrpf **Special Logic Notes:** NONE

3.6.20.1 Change Orders

ID	Name	Description
480	Retroactive Buyin Accrete report	There is a need to duplicate the KYMQ1205-R005 report.

3.6.21 buypm406 -- Transaction to CMS Summary report

Technical Name:	buypm406
Program Title:	Transaction to CMS Summary report
Programming Language:	C
Description:	This program produces the Transaction to CMS Summary report. **Input Parameters:** Date range from T_SYSTEM_PARMS where nam_program = 'AIMCYCLE'. **Exit values:** EXIT_SUCCESS - Normal termination EXIT_FAILURE - Abnormal termination due to open, read, allocation, or input errors **Input Files:** NONE **Output Files:** buym4006.rpt **Input Tables:** T_BUYA_PREM T_BUYB_PREM **Output Tables:** NONE **Sort Criteria:** ID_MEDICAID **Switches:** None at this time **Link Procedures:** libxml and libmrpf **Special Logic Notes:** NONE

3.6.21.1 Change Orders

ID	Name	Description
481	Transaction to CMS Summary Rpt	There is a need to duplicate the KYMQ2000-R001 report.

3.6.22 buypm407 -- Manual Transactions Submitted report

Technical Name:	buypm407
Program Title:	Manual Transactions Submitted report
Programming Language:	C
Description:	This program produces the Manual Transactions Submitted report. **Input Parameters:** Date range from T_SYSTEM_PARMS where nam_program = 'AIMCYCLE'. **Exit values:** EXIT_SUCCESS - Normal termination EXIT_FAILURE - Abnormal termination due to open, read, allocation, or input errors **Input Files:** NONE **Output Files:** buym4007.rpt **Input Tables:** T_BUYA_PREM T_BUYB_PREM T_RE_BASE **Output Tables:** NONE **Sort Criteria:** ID_MEDICAID **Switches:** None at this time **Link Procedures:** libxml and libmrpf **Special Logic Notes:** NONE

3.6.22.1 Change Orders

ID	Name	Description
482	Manual Transactions Submitted	There is a need to duplicate the KYMQ2010-R001 report.

3.6.23 buypm408 -- Matching Transactions report

Technical Name:	buypm408
Program Title:	Matching Transactions report
Programming Language:	C
Description:	This program produces the Matching Transactions report. **Input Parameters:** Date range from T_SYSTEM_PARMS where nam_program = 'AIMCYCLE'. **Exit values:** EXIT_SUCCESS - Normal termination EXIT_FAILURE - Abnormal termination due to open, read, allocation, or input errors **Input Files:** NONE **Output Files:** buym4008.rpt **Input Tables:** T_BUYA_BILL T_BUYB_BILL T_RE_BASE **Output Tables:** NONE **Sort Criteria:** ID_MEDICAID **Switches:** None at this time **Link Procedures:** libxml and libmrpf **Special Logic Notes:** NONE

3.6.23.1 Change Orders

ID	Name	Description
4002	4004-M/4008-M Abend	Reports 4004-M and 4008-M are abending.
483	Matching Transactions report	There is a need to duplicate the KYMQ7000-R001 report.

3.6.24 buypm409 -- Recipients Not Billed report

Technical Name:	buypm409
Program Title:	Recipients Not Billed report
Programming Language:	C
Description:	This program produces the Recipients Not Billed report. **Input Parameters:** Date range from T_SYSTEM_PARMS where nam_program = 'AIMCYCLE'. **Exit values:** EXIT_SUCCESS - Normal termination EXIT_FAILURE - Abnormal termination due to open, read, allocation, or input errors **Input Files:** NONE **Output Files:** buym4009.rpt **Input Tables:** T_BUYA_BILL T_BUYB_BILL T_BUYA_PERD T_BUYB_PERD T_RE_BASE **Output Tables:** NONE **Sort Criteria:** ID_MEDICAID **Switches:** None at this time **Link Procedures:** libxml and libmrpf **Special Logic Notes:** NONE

3.6.24.1 Change Orders

ID	Name	Description
484	Recipients Not Billed report	There is a need to duplicate the KYMQ7000-R002 report.

3.6.25 buypm410 -- Unmatched Recipients Billed report

Technical Name:	buypm410
Program Title:	Unmatched Recipients Billed report
Programming Language:	C
Description:	This program produces the Unmatched Recipients Billed report. **Input Parameters:** Date range from T_SYSTEM_PARMS where nam_program = 'AIMCYCLE'. **Exit values:** EXIT_SUCCESS - Normal termination EXIT_FAILURE - Abnormal termination due to open, read, allocation, or input errors **Input Files:** NONE **Output Files:** buym4010.rpt **Input Tables:** T_BUYA_MISMATCH T_BUYB_MISMATCH **Output Tables:** NONE **Sort Criteria:** ID_MEDICAID **Switches:** None at this time **Link Procedures:** libxml and libmrpf **Special Logic Notes:** NONE

3.6.25.1 Change Orders

ID	Name	Description
485	Unmatched Recipients Billed	There is a need to duplicate the KYMQ7000-R003 report.

3.6.26 buypm411 -- Misc Debit/Credit report

Technical Name:	buypm411
Program Title:	Misc Debit/Credit report
Programming Language:	C
Description:	This program produces the Misc Debit/Credit report. **Input Parameters:** Date range from T_SYSTEM_PARMS where nam_program = 'AIMCYCLE'. **Exit values:** EXIT_SUCCESS - Normal termination EXIT_FAILURE - Abnormal termination due to open, read, allocation, or input errors **Input Files:** NONE **Output Files:** buym4011.rpt **Input Tables:** T_BUYA_BILL T_BUYB_BILL T_RE_BASE **Output Tables:** NONE **Sort Criteria:** ID_MEDICAID **Switches:** None at this time **Link Procedures:** libxml and libmrpf **Special Logic Notes:** NONE

3.6.26.1 Change Orders

ID	Name	Description
486	Misc Debit/Credit Transactions	There is a need to duplicate the KYMQ7000-R004 report.

3.6.27 buypm412 -- Trans Code Financial Summary report

Technical Name:	buypm412
Program Title:	Trans Code Financial Summary report
Programming Language:	C
Description:	Tables Accessed:

3.6.27.1 Change Orders

ID	Name	Description
No associated Change Orders found		

3.6.28 buypm431 -- MMA Outbound reports

Technical Name:	buypm431
Program Title:	MMA Outbound reports
Programming Language:	C
Description:	This program produces the BUY-4310-M and BUY-4311-M reports. These reports list all outbound MMA transactions to CMS. **Input Parameters:** Date range from T_SYSTEM_PARMS where nam_program = 'AIMCYCMO'. **Exit values:** EXIT_SUCCESS - Normal termination EXIT_FAILURE - Abnormal termination due to open, read, allocation, or input errors **Input Files:** buym_mma_outbound.srt **Output Files:** buym4310.rpt buym4311.rpt **Input Tables:** NONE **Output Tables:** NONE **Sort Criteria:** ID_MEDICAID **Switches:** None at this time **Link Procedures:** libxml and libmrpf **Special Logic Notes:** NONE

3.6.28.1 Change Orders

ID	Name	Description
7732	RTI/Restart Part D	There is a need to the restartability of the Part D/MMA process.

3.6.29 buypm523 -- EDB Entitlement Processing reports

Technical Name:	buypm523
Program Title:	EDB Entitlement Processing reports
Programming Language:	C
Description:	This program produces the suite of reports from EDB processing. **Input Parameters:** Date range from T_SYSTEM_PARMS where nam_program = 'AIMCYCLE'. **Exit values:** EXIT_SUCCESS - Normal termination EXIT_FAILURE - Abnormal termination due to open, read, allocation, or input errors **Input Files:** NONE **Output Files:** buym5003.rpt buym5004.rpt buym5005.rpt buym5006.rpt buym5007.rpt buym5008.rpt buym5009.rpt **Input Tables:** T_RE_PS2_LOG T_RE_PS2_ERR T_RE_BASE **Output Tables:** NONE **Sort Criteria:** ID_MEDICAID **Switches:** None at this time **Link Procedures:** libxml and libmrpf **Special Logic Notes:** None.

3.6.29.1 Change Orders

ID	Name	Description
1464	EDB Processing reports	There is a need to produce EDB processing reports.
2849	Move Core Batch Changes to MO	Occasionally a change is made in the core system code. Use this change order to promote batch program fixes to model office.
6873	Modify EDB reports for HMS data	There is a need to add the MISC_DATA field to the reports produced by the buypm523 program. The Commonwealth wants the file from CMS to be routed to HMS. HMS will add their data to the file and then send to interChange. To differentiate HMS data from CMS data, an HMS tag will be added to the data put into the MISC_DATA field. CMS data will begin with CMS tag. The report will need to be changed accommodate the CMS and HMS tagged data and print it on the report. A new column MISC DATA will need to be added to do this.
6886	report showing duplicate records	BUY-5006-M showing duplicate information The BUY-5006-M is showing duplicate transactions for the same member. This is the Entitlement Add report and should be showing member adds. 328602796 is showing two transactions on the report for the same period. If you scroll the report you can see there are at least two transactions listed for every member. See screen shot.

3.6.30 buypm600 -- PCG Reconciliation File Extract

Technical Name:	buypm600
Program Title:	HMS Reconciliation File Extract
Programming Language:	C
Description:	This program creates an extract file of Buy-In activity for transmission to HMS. **Input Parameters:** Date range from T_SYSTEM_PARMS where nam_program = 'AIMCYCLE'. **Exit values:** EXIT_SUCCESS - Normal termination EXIT_FAILURE - Abnormal termination due to open, read, allocation, or input errors **Input Files:** None. **Output Files:** buym6000.rpt **Input Tables:** T_BUYA_PREM T_BUYB_PREM T_RE_BASE **Output Tables:** None. **Sort Criteria:** ID_MEDICAID **Switches:** None at this time **Link Procedures:** libxml and libmrpf **Special Logic Notes:** None.

3.6.30.1 Change Orders

ID	Name	Description
1183	PCG Buy-In Recon Interface	There is a need to produce a reconciliation file for Buy-In processing.

3.6.31 buypm603 -- Buy-In PCG Input File update

Technical Name:	buypm603
Program Title:	Buy-In PCG Input File update
Programming Language:	C
Description:	This program reads the input files produced by HMS and updates the Buy-In data model tables as if the input file had been produced by interChange.

3.6.31.1 Change Orders

ID	Name	Description
1080	PCG Buy-In Update	There is a need to accept a file feed of Buy-In information from HMS.
3845	Buy-In PCG Interface	The HMS interface needs to be modified to allow for invalid data.
5066	Incorrect stop date	The Buy-In PCG interface is appending an "01" to the end date rather than the correct end-of-month value.
5119	buypm603 effective date 0	Some input records are storing 0 as effective date.
6714	BIEC Is Overlaid By Txn	The Part B Buy-In Eligibility Code is being overlaid by the transaction code.
7810	Modif eff date on 5x transaction	The 5x transaction codes should have an effective date at the end of the month, not the beginning.

3.6.32 buypm604 -- Pseudo-41

Technical Name:	buypm604
Program Title:	Pseudo-41
Programming Language:	C
Description:	This program creates pseudo-41 transactions in the T_BUYx_PREM tables. **Input Parameters:** Date range from T_SYSTEM_PARMS where nam_program = 'AIMCYCLE'. **Exit values:** EXIT_SUCCESS - Normal termination EXIT_FAILURE - Abnormal termination due to open, read, allocation, or input errors **Input Files:** NONE **Output Files:** NONE **Input Tables:** T_BUYA_BILL T_BUYB_BILL T_BUYA_PREM T_BUYB_PREM **Output Tables:** T_BUYA_PREM T_BUYB_PREM **Sort Criteria:** NONE **Switches:** None at this time **Link Procedures:** libxml and libmrpf **Special Logic Notes:** None

3.6.32.1 Change Orders

ID	Name	Description
No associated Change Orders found		

3.6.33 buypm605 -- Buy-In PCG Billing File Update

Technical Name:	buypm605
Program Title:	Buy-In PCG Billing File Update
Programming Language:	C
Description:	This program processes the billing files filtered by HMS software and imports them into the interChange database. **Input Parameters:** None. **Exit values:** EXIT_SUCCESS - Normal termination EXIT_FAILURE - Abnormal termination due to open, read, allocation, or input errors **Input Files:** buy_a_bill_pcg.dat buy_b_bill_pcg.dat **Output Files:** None. **Input Tables:** T_RE_BASE T_SYSTEM_PARMS **Output Tables:** T_BUYA_BILL T_BUYA_BILL_INFO T_BUYA_MISMATCH T_BUYA_PERD T_BUYB_BILL T_BUYB_BILL_INFO T_BUYB_MISMATCH T_BUYB_PERD **Sort Criteria:** None. **Switches:** None at this time **Link Procedures:** libxml and libmrpf **Special Logic Notes:** NONE

3.6.33.1 Change Orders

ID	Name	Description
1080	PCG Buy-In Update	There is a need to accept a file feed of Buy-In information from HMS.
3845	Buy-In PCG Interface	The HMS interface needs to be modified to allow for invalid data.
5066	Incorrect stop date	The Buy-In PCG interface is appending an "01" to the end date rather than the correct end-of-month value.

3.6.34 buypm606 -- Buy-In Transaction 23 filter program

Technical Name:	buypm606
Program Title:	Buy-In Transaction 23 filter program
Programming Language:	C
Description:	This program filters out billing records where RIC is 'C' or transaction code is 23 (HIC number change). **Input Parameters:** Date range from T_SYSTEM_PARMS where nam_program = 'AIMCYCLE'. **Exit values:** EXIT_SUCCESS - Normal termination EXIT_FAILURE - Abnormal termination due to open, read, allocation, or input errors **Input Files:** buy_a_bill.dat buy_b_bill.dat **Output Files:** buy_a_bill.tmp buy_b_bill.tmp **Input Tables:** T_SYSTEM_PARMS **Output Tables:** None. **Sort Criteria:** None. **Switches:** None at this time **Link Procedures:** libxml and libmrpf **Special Logic Notes:** NONE

3.6.34.1 Change Orders

ID	Name	Description
No associated Change Orders found		

3.6.35 buypmMMAEnroll -- Part D Current Month Enrollments

Technical Name:	buypmMMAEnroll
Program Title:	Part D Current Month Enrollments
Programming Language:	C
Description:	This program generates current month Medicare D enrollments. **Tables Accessed**: T_RE_MEDICARE_A T_RE_MEDICARE_B T_PUB_HLTH_PGM T_RE_BASE T_RE_ELIG T_RE_HIB T_RE_CASE T_RE_CASE_XREF T_SYSTEM_PARMS **Tables Updated:** None **Input Parameters:** None **Exit Value:** 0 - normal termination 1 - abnormal termination

3.6.35.1 Change Orders

ID	Name	Description
2470	Part D - Convert Batch System	There is a need to convert the Part D batch system to use the eligibility criteria established by the Commonwealth.
3799	Buy-in batch error	A bug was found in the batch code for Buy-in.
3992	Part D Batch	Part D batch is not updating correctly for large amounts of data.
7510	MMA Enrollment File	There is a need to correct flaws in the MMA Enrollment File.
7689	Revise Part D Dual Status Code	There is a need to revise MMA/Part D Dual Status Code determination.
8968	Dual Status and FPL Ind	On July file sent all members with a dual status flag of 08, which is subject to clawback and FPL indicator sent unknown value for all members.

3.6.36 buypmMMAMerge -- Part D Outbound File Generator

Technical Name:	buypmMMAMerge
Program Title:	Part D Outbound File Generator
Programming Language:	C
Description:	This program combines the output files from elgpm600, elgpm610 and elgpm620 into a single file for transmission to CMS **Tables Accessed:** T_RE_BASE T_RE_CMS_MMA_ENROLL T_SYSTEM_PARMS **Tables Updated:** None **Input Parameters**: None **Exit Value:** 0 - normal termination 1 - abnormal termination

3.6.36.1 Change Orders

ID	Name	Description
2470	Part D - Convert Batch System	There is a need to convert the Part D batch system to use the eligibility criteria established by the Commonwealth.
3314	Merge Part D LIS	There is a need to merge the manually-entered LIS members into the outgoing Part D Enrollment File. DCR 01442/CO 188
3799	Buy-in batch error	A bug was found in the batch code for Buy-in.
3992	Part D Batch	Part D batch is not updating correctly for large amounts of data.
5054	EDB/MMA Batch Abends	Abends are occurring in the UAT environment.
7510	MMA Enrollment File	There is a need to correct flaws in the MMA Enrollment File.
8968	Dual Status and FPL Ind	On July file sent all members with a dual status flag of 08, which is subject to clawback and FPL indicator sent unknown value for all members.

3.6.37 buypmMMARecon -- Part D Retroactive Changes to Enrollments

Technical Name:	buypmMMARecon
Program Title:	Part D Retroactive Changes to Enrollments
Programming Language:	C
Description:	This program generates changes to retroactive Medicare D enrollments **Tables Accessed:** T_RE_BASE T_RE_ELIG T_RE_HIB T_RE_CASE T_RE_CASE_XREF T_RE_CMS_MMA_ENROLL T_SYSTEM_PARMS **Tables Updated:** None **Input Parameters**: None **Exit Value:** 0 - normal termination 1 - abnormal termination

3.6.37.1 Change Orders

ID	Name	Description
2470	Part D - Convert Batch System	There is a need to convert the Part D batch system to use the eligibility criteria established by the Commonwealth.
3799	Buy-in batch error	A bug was found in the batch code for Buy-in.
3992	Part D Batch	Part D batch is not updating correctly for large amounts of data.
7510	MMA Enrollment File	There is a need to correct flaws in the MMA Enrollment File.
7689	Revise Part D Dual Status Code	There is a need to revise MMA/Part D Dual Status Code determination.
8968	Dual Status and FPL Ind	On July file sent all members with a dual status flag of 08, which is subject to clawback and FPL indicator sent unknown value for all members.

3.6.38 buypmMMARetro -- Part D Retroactive Enrollments

Technical Name:	buypmMMARetro
Program Title:	Part D Retroactive Enrollments
Programming Language:	C
Description:	This program generates retroactive Medicare D enrollments. **Tables Accessed:** T_RE_MEDICARE_A T_RE_MEDICARE_B T_PUB_HLTH_PGM T_RE_BASE T_RE_ELIG T_RE_HIB T_RE_CASE T_RE_CASE_XREF T_SYSTEM_PARMS **Tables Updated:** None **Input Parameters:** None **Exit Value:** 0 - normal termination 1 - abnormal termination

3.6.38.1 Change Orders

ID	Name	Description
2470	Part D - Convert Batch System	There is a need to convert the Part D batch system to use the eligibility criteria established by the Commonwealth.
3799	Buy-in batch error	A bug was found in the batch code for Buy-in.
7510	MMA Enrollment File	There is a need to correct flaws in the MMA Enrollment File.
7689	Revise Part D Dual Status Code	There is a need to revise MMA/Part D Dual Status Code determination.
8968	Dual Status and FPL Ind	On July file sent all members with a dual status flag of 08, which is subject to clawback and FPL indicator sent unknown value for all members.

3.6.39 buypmalt -- Alternate Demographics Patch

Technical Name:	buypmalt
Program Title:	Alternate Demographics Patch
Programming Language:	C
Description:	This program reads the Part A and Part B output files and patches the alternate demographics information from T_BUY_EDB. **Input Parameters:** None. **Exit values:** EXIT_SUCCESS - Normal termination EXIT_FAILURE - Abnormal termination due to open, read, allocation, or input errors **Input Files:** buy_a_prem.dat buy_b_prem.dat **Output Files:** buy_a_prem.dat buy_b_prem.dat **Input Tables:** T_RE_BASE T_RE_EDB **Output Tables:** None. **Sort Criteria:** None. **Switches:** None at this time **Link Procedures:** libxml and libmrpf **Special Logic Notes:** None.

3.6.39.1 Change Orders

ID	Name	Description
489	Buy-In Alternate Demographics	There is a need to substitute the demographics received from CMS into the Buy-In Input File transmitted to CMS.

3.6.40 buypxlat -- Buy-In Data Translator

Technical Name:	buypxlat
Program Title:	Buy-In Data Translator
Programming Language:	C
Description:	This program scans a data file and replaces binary 0x00 with binary 0x20. **Input Parameters:** None **Exit Values:** EXIT_SUCCESS - Normal termination EXIT_FAILURE - Abnormal termination because of open, read, allocation, or input errors **Input Files:** Part D file from Commonwealth **Output Files:** Translated Part D file. **Input Tables:** None **Output Tables:** None **Sort Criteria:** None **Switches:** None at this time **Link Procedure:** libmrpf **Special Logic Notes:**

3.6.40.1 Change Orders

ID	Name	Description
3992	Part D Batch	Part D batch is not updating correctly for large amounts of data.

3.6.41 buyrpm -- Buy-In Receiving Batch Program

Technical Name:	buyrpm
Program Title:	Buy-In Receiving Batch Program
Programming Language:	UNIX Script
Description:	This is the driver module to process both Medicare Buy-In Part A and Part B CMS Billing Files and record the information into interChange Buy-In Database Tables. Following is a list of activities: Reads both Part A and Part B Billing files, identifies each record type, using Buy-in Output file layouts (as described in State Buy-In Manual). Using State Buy-In Manual's specifications, processes Billing Records (Credits and Debits), Acknowledgements, Public Welfare Accretions, Claim Number Corrections, Retroactive Billing Records, Exceptions, Mismatched Records, and Errors and populates them into Buy-In tables. While processing these transactions, processes all the Claim Number Correction (CNC) Records at the beginning and commits those transactions into the database and then processes rest of the records. In the beginning, identifies all Claim Correction Records in Part A and Part B Files, matches them to the appropriate beneficiaries, and formats/inserts records into appropriate tables. If the new Medicare ID is not associated to the SAK_RECIP as the most current Medicare ID, inserts a new row into T_RE_HIB table with ID_SOURCE value of 'A'. **Input Parameters:** None **Exit Values:** EXIT_SUCCESS - Normal termination EXIT_FAILURE - Abnormal termination because of open, read, allocation, or input errors **Input Files:** buy_a_bill.dat buy_b_bill.dat **Output Files:** None **Input Tables:** T_RE_HIB T_RE_BASE T_RE_MEDICARE_A

	T_RE_MEDICARE_B **Output Tables:** T_BUYA_BILL T_BUYA_BILL_INFO T_BUYA_PERD T_BUYA_MISMATCH T_BUYA_ERROR T_BUYA_BILL T_BUYA_BILL_INFO T_BUYA_PERD T_BUYB_MISMATCH T_BUYB_ERROR T_BUYB_EXCEPT T_RE_ALERT T_RE_HIB T_RE_MEDICARE_A T_RE_MEDICARE_B **Sort Criteria:** None <

3.6.41.1 Change Orders

ID	Name	Description
1419	CMS Batch Receiving System	There is a need to test the New Buy-In Receiving and Sending System in the Kentucky environment.

3.6.42 buysapm -- Buy-In State Actions Generation Program

Technical Name:	buysapm
Program Title:	Buy-In State Actions Generation Program
Programming Language:	C
Description:	This module automates the process of generating the following State Actions/Responses based on Part A and Part B Billing Records (Credits and Debits), Acknowledgements, Public Welfare Accretions, Claim Number Corrections, Retroactive Billing Records, Exceptions, Mismatched Records, and Errors, received from CMS: Deletions & Change Requests: Identifies Ongoing Buy-In Beneficiaries whose Medicaid or Medicare (Part A or B) Coverage has Elapsed/Suspended. Generates Part A and/or Part B deletion transactions with code 51, for Sending Batch System Identifies Ongoing Buy-In Beneficiaries who have expired in the last month. Generates deletion transactions with code 53, for Sending Batch System Identifies Ongoing Buy-In Beneficiaries whose Medicaid Status has changed to Unmet Spenddown. Generates change request transactions with code 99bb, for Sending Batch System Identifies Ongoing Buy-In Beneficiaries with discrepancies in Sex Codes, Eligibility Codes, or Welfare Identification numbers. Generates change requests with code 99bb for Sending Batch System Accretions: Identifies Beneficiaries attained Buy-In Eligibility recently, for Part A and/or Part B or both. Determines eligibility and starting dates, using State eligibility/accretion guidelines. Generates accretion transactions with code 61, for Sending Batch System. In case of CMS Alert Records (86), the Batch system determines eligibility and starting dates, using State eligibility/accretion guidelines transactions with code 84, for Sending Batch System. (This should happen only for Buy-in Part B) **Input Parameters:** None **Exit Values:** EXIT_SUCCESS - Normal termination EXIT_FAILURE - Abnormal termination because of open, read, allocation, or input errors

	Input Files: None **Output Files:** None **Input Tables:** T_RE_BASE T_RE_HIB T_RE_ELIG T_RE_AID_ELIG T_PUB_HLTH_PGM T_BUYA_BILL T_BUYB_BILL T_BUYA_PREM T_BUYB_PREM **Output Tables:** T_BUYA_PREM T_BUYB_PREM **Sort Criteria:** None **Switches:** None at this time **Link Procedure:** None **Special Logic Notes:** None

3.6.42.1 Change Orders

ID	Name	Description
1420	CMS State Action System	There is a need to process data received from CMS in the new file format.

3.6.43 buyspm -- Buy-In Sending Batch Program

Technical Name:	buyspm
Program Title:	Buy-In Sending Batch Program
Programming Language:	C
Description:	This program creates the Part A and Part B input files for transmission to CMS. The following functions are performed: • Retrieves buy-in transaction data from Buy-in Database; • Validates transactions against business rules; • Formats records according to Buy-in AB Premium Record File Layout; and, • Writes the formatted transaction records into the respective files. **Input Parameters:** None **Exit Values:** EXIT_SUCCESS - Normal termination EXIT_FAILURE - Abnormal termination because of open, read, allocation, or input errors **Input Files:** None **Output Files:** buy_a_prem.dat buy_b_prem.dat **Input Tables:** T_BUYA_PREM T_BUYB_PREM T_BUYB_EXCEPT **Output Tables:** None **Sort Criteria:** None **Switches:** None at this time. **Link Procedure:** None

	Special Logic Notes: None

3.6.43.1 Change Orders

ID	Name	Description
1421	CMS Batch Sending System	There is a need to test the New Buy-In Receiving and Sending System in the Kentucky environment.

3.6.44 elgpd05m -- Part D Daily Recon

Technical Name:	elgpd05m
Program Title:	Part D Daily Recon
Programming Language:	C
Description:	This program scans all Medicare Part D dates and adjusts for changes in eligibility. **Tables Accessed:** T_RE_MEDICARE_A T_RE_MEDICARE_B T_RE_MEDICARE_D T_PUB_HLTH_PGM T_SYSTEM_PARMS **Tables Updated:** T_RE_MEDICARE_D **Input Parameters:** None **Exit Value:** 0 - normal termination 1 - abnormal termination

3.6.44.1 Change Orders

ID	Name	Description
2470	Part D - Convert Batch System	There is a need to convert the Part D batch system to use the eligibility criteria established by the Commonwealth.

3.6.45 elgpm150 -- Process EDB file

Technical Name:	elgpm150
Program Title:	Process EDB file
Programming Language:	C
Description:	This program processes the EDB file from CMS, and applies updates to Medicare segments. **Input Parameters:** Date range from T_SYSTEM_PARMS where nam_program = 'AIMCYCLE'. **Exit values:** EXIT_SUCCESS - Normal termination EXIT_FAILURE - Abnormal termination due to open, read, allocation, or input errors **Input Files:** buym5200.dat **Output Files:** None. **Input Tables:** T_RE_BASE **Output Tables:** T_RE_MEDICARE T_BUYA_PERD T_BUYB_PERD T_RE_PS2_LOG T_RE_PS2_ERR **Sort Criteria:** None. **Switches:** None at this time **Link Procedures:** libxml and libmrpf **Special Logic Notes:** NONE

3.6.45.1 Change Orders

ID	Name	Description
226	Process EDB Enrollment Database	There is a need to process the EDB Buyin enrollment database file transmitted from CMS.
2849	Move Core Batch Changes to MO	Occasionally a change is made in the core system code. Use this change order to promote batch program fixes to model office.
5071	EDB not populating SAK_RECIP	The EDB processing program did not populate the SAK_RECIP column in table T_RE_EDB. This does not affect the ability to use the EDB panels.
5929	EDB Sr Pan not display all info	When you go to Member to Related Data to Other you click on the EDB Search and it will give you a listing of members. On this panel, there are column headings and two of them are Date of Birth and Sex. The DOB is filled with one zero and the Sex is blank. This information is on the EDB and should be populated on this panel. See attached screen shots.
7655	Duplicate Medicare IDs	Duplicate HICs, were found that many were added in March and April by an iC process. 1. The HIB is duplicated for members. See sak_recip 2513666 and 2513735. The HIB was already on file, and shouldn't be added again. 2. The HIB, which belonged to one member was added for another member. See sak_recip 3238. 3. Each of the valid source codes should be added to T_CDE_HIB_SOURCE.

3.6.46 elgpm152 -- Missing Sequence Number report

Technical Name:	elgpm152
Program Title:	Missing Sequence Number report
Programming Language:	C
Description:	This program produces a report of members transmitted in the EDB finder file that are not returned by CMS. **Input Parameters:** Date range from T_SYSTEM_PARMS where nam_program = 'AIMCYCLE'. **Exit values:** EXIT_SUCCESS - Normal termination EXIT_FAILURE - Abnormal termination due to open, read, allocation, or input errors **Input Files:** buym0521.dat **Output Files:** buym5220.rpt **Input Tables:** T_RE_EDB **Output Tables:** NONE **Sort Criteria:** Number sequence **Switches:** None at this time **Link Procedures:** libxml and libmrpf **Special Logic Notes:** NONE

3.6.46.1 Change Orders

ID	Name	Description
1156	EDB Missing Sequence report	There is a need to report records sent to CMS in the finder file that are not returned in the EDB database.
2849	Move Core Batch Changes to MO	Occasionally a change is made in the core system code. Use this change order to promote batch program fixes to model office.

ID	Name	Description
5876	REL2-Add Zip Support	There is a need to add ZIP file support.

3.6.47 elgpm153 -- EDB Extract file

Technical Name:	elgpm153
Program Title:	EDB Extract file
Programming Language:	C
Description:	This program produces an extract "finder file" for CMS. **Input Parameters:** Date range from T_SYSTEM_PARMS where nam_program = 'AIMCYCLE'. Optional command-line parameter to send all recipients rather than just active eligibility recipients. **Exit values:** EXIT_SUCCESS - Normal termination EXIT_FAILURE - Abnormal termination due to open, read, allocation, or input errors **Input Files:** None. **Output Files:** buym0521.dat **Input Tables:** T_RE_BASE T_RE_AID_ELIG **Output Tables:** None. **Sort Criteria:** ID_MEDICAID **Switches:** None at this time **Link Procedures:** libxml and libmrpf **Special Logic Notes:** None.

3.6.47.1 Change Orders

ID	Name	Description
1077	EDB Finder File Extract	There is a need to provide an eligibility extract to transmit to CMS.

ID	Name	Description
6872	Process EDB File from HMS	Previously, the EDB file was designed and developed to be received from CMS (reference CO226). The Commonwealth wants the file from CMS to be routed to HMS. HMS will add their data to the file. To differentiate HMS data from CMS data, a HMS tag will be added to the data put into the MISC_DATA field. CMS data will begin with CMS tag. The requirements for the proposed routing and processing are noted below and in the Technical Specifications: 1. The file structure of the EDB file received by interChange will not be modified by HMS in any manner during HMS processing, and the EDB file sent to interChange must match the file layout in the KY DDI Project Workbook (CMS EDB Layout); and, 2. HMS will need to actively participate in testing by providing test files. The test files will need to be in the same format as the original CMS response data, contain the original CMS response data, and include HMS data records. The concatenated HMS records must match the original CMS file format. No changes to reports or panels will be made.

3.6.48 elgpm650 -- Part D MMA Processing

Technical Name:	elgpm650
Program Title:	Part D MMA Processing
Programming Language:	C
Description:	This program process the CMS MMA file and produces Report ELG-0600-M. **Tables Accessed:** T_RE_BASE T_RE_HIB T_RE_MEDICARE_D T_RE_CMS_MMA_ENROLL T_RE_PARTD_PDP_CARRIER T_RE_PARTD_PDP_PLAN T_RE_PARTD_PDP_ASSIGN T_SYSTEM_PARMS **Tables Updated:** T_RE_CMS_MMA_ENROLL T_RE_PARTD_PDP_CARRIER T_RE_PARTD_PDP_PLAN T_RE_PARTD_PDP_ASSIGN **Input Parameters:** None **Exit Value:** 0 - normal termination 1 - abnormal termination

3.6.48.1 Change Orders

ID	Name	Description
2849	Move Core Batch Changes to MO	Occasionally a change is made in the core system code. Use this change order to promote batch program fixes to model office.
3992	Part D Batch	Part D batch is not updating correctly for large amounts of data.

3.6.49 elgpm651 -- Part D MMA Inbound report

Technical Name:	elgpm651
Program Title:	Part D MMA Inbound report
Programming Language:	C
Description:	This program produces the MMA Inbound File Error report. **Tables Accessed:** T_RE_BASE T_RE_HIB T_RE_CMS_MMA_ENROLL T_BATCH_ERR_MSG T_SYSTEM_PARMS **Tables Updated:** None **Input Parameters:** None **Exit Value:** 0 - normal termination 1 - abnormal termination

3.6.49.1 Change Orders

ID	Name	Description
No associated Change Orders found		

3.6.50 elgpm652 -- Part D MMA Outbound report

Technical Name:	elgpm652
Program Title:	Part D MMA Outbound report
Programming Language:	C
Description:	This program produces the MMA Outbound Processing report. **Tables Accessed:** T_RE_CMS_MMA_ENROLL T_SYSTEM_PARMS **Tables Updated**: None **Input Parameters:** None **Exit Value**: 0 - normal termination 1 - abnormal termination

3.6.50.1 Change Orders

ID	Name	Description
No associated Change Orders found		

3.6.51 elgpm654 -- Load Clawback amounts

Technical Name:	elgpm654
Program Title:	Load Clawback amounts
Programming Language:	C
Description:	To be completed

3.6.51.1 Change Orders

ID	Name	Description
2641	New report ELG-0655-M	There is a need to produce a Clawback summary report. DCR 01458/CO 251
8032	MMA Clawback valid for 01	Clawback amounts are not being stored if the CMS return code is a "000001".

3.6.52 elgpm655 -- Print Clawback Summary report

Technical Name:	elgpm655
Program Title:	Print Clawback Summary report
Programming Language:	C
Description:	To be completed.

3.6.52.1 Change Orders

ID	Name	Description
4086	ELG-0655-M not printing	The report is not being produced.

3.6.53 elgpm660 -- Part D Entitlement Date Mismatch report

Technical Name:	elgpm660
Program Title:	Part D Entitlement Date Mismatch report
Programming Language:	C
Description:	This program produces the Part D Entitlement Date Mismatch report. **Tables Accessed**: T_SYSTEM_PARMS **Tables Updated:** None **Input Parameters:** None **Exit Value:** 0 - normal termination 1 - abnormal termination

3.6.53.1 Change Orders

ID	Name	Description
No associated Change Orders found		

3.6.54 elgpm670 -- Part D PDP Errors report

Technical Name:	elgpm670
Program Title:	Part D PDP Errors report
Programming Language:	C
Description:	This program produces the Part D PDP Errors report. **Tables Accessed**: T_SYSTEM_PARMS **Tables Updated**: None **Input Parameters**: None **Exit Value**: 0 - normal termination 1 - abnormal termination

3.6.54.1 Change Orders

ID	Name	Description
No associated Change Orders found		

3.7 Internal Web Pages

There are no pages and panels for this subsystem.

3.8 Reports

The following section provides a description and sample layout for each Report associated to the Member Data Maintenance subsystem.

Some information in this section is represented in table format. In order to fit information on the page, some data field information may wrap to the next line.

3.8.1 BIA-1001-M -- Buy-In Part A Billing (Receiving)

The Buy-In Part A Billing report is a paper copy of the system-generated monthly file from CMS. This report informs the state of the status of Buy-in Part A Medicaid members by using transaction codes to communicate an update, or an acknowledgment of state accretion, deletion or change.

The purpose of the Buy-In Part A Billing report is to display CMS' current full listing of billing records and acknowledgments of state accretion, deletion, and change records.

Selection Criteria: If no parameter is passed in the command line, the date the Buy-In Part A billing file processed that contained this transaction must be between the first day and the end day of the month for which the report is run. Otherwise, the date the Buy-In Part A billing file processed that contained this transaction must be between the two optional dates passed in command line parameter.

3.8.1.1 Technical Name

BIA-1001-M

3.8.1.2 Sort Order

T_BUYA_BILL.CDE_BUY_TXN, T_BUYA_BILL.CDE_BUY_SUB, T_BUYA_BILL.MISC_CDE_DTE, T_BUYA_BILL.ID_MEDICARE

3.8.1.3 Buy-In Part A Billing (Receiving) Layout

For readability, this report layout appears on the next page.

```
Report  : BIA-1001-M                          COMMONWEALTH OF KENTUCKY                                  Run Date: MM/DD/CCYY
Process : BUYJM001                       MEDICAID MANAGEMENT INFORMATION SYSTEM                         Run Time:   99:99:99
Location: BIA1001M                      BUY-IN PART A BILLING (RECEIVING) REPORT                        Page:            999
                                                     MM/DD/CCYY

                                                                  AGENCY  BILL        EFF                                  PREMIUM
MEDICAID ID  TXN SUB HIC          LAST NAME    FIRST    MI G DOB   CODE    DATE        DATE        SUR  RED  RIC          AMOUNT
XXXXXXXXXX   XXXX X  XXXXXXXXXXXX XXXXXXXXXXXX XXXXXXX X  X MM/DD/CCYY XXX    MM/DD/CCYY  MM/DD/CCYY  X    X    X      $9,9999.99
XXXXXXXXXX   XXXX X  XXXXXXXXXXXX XXXXXXXXXXXX XXXXXXX X  X MM/DD/CCYY XXX    MM/DD/CCYY  MM/DD/CCYY  X    X    X      $9,9999.99
XXXXXXXXXX   XXXX X  XXXXXXXXXXXX XXXXXXXXXXXX XXXXXXX X  X MM/DD/CCYY XXX    MM/DD/CCYY  MM/DD/CCYY  X    X    X      $9,9999.99
XXXXXXXXXX   XXXX X  XXXXXXXXXXXX XXXXXXXXXXXX XXXXXXX X  X MM/DD/CCYY XXX    MM/DD/CCYY  MM/DD/CCYY  X    X    X      $9,9999.99

    NORMAL BILLING:                                99,999,999,999
    TOTAL ACCRETIONS:                              99,999,999,999
    TOTAL DELETIONS:                               99,999,999,999
    TOTAL MISCELLANEOUS:                           99,999,999,999

    TOTAL NUMBER OF RECORDS RECEIVED FROM CMS:     99,999,999,999
```

```
Report  : BIA-1001-M                          COMMONWEALTH OF KENTUCKY                                  Run Date: MM/DD/CCYY
Process : BUYJM001                       MEDICAID MANAGEMENT INFORMATION SYSTEM                         Run Time:   99:99:99
Location: BIA1001M                      BUY-IN PART A BILLING (RECEIVING) REPORT                        Page:            999
                                                     MM/DD/CCYY

          ----------- DEBITS -----------          ----------- CREDITS -------------          -- MISCELLANEOUS --
          ITEMS                AMOUNT                ITEMS                AMOUNT                   ITEMS
CODE XXXX 99,999,999      $99,999,999.99      CODE XXXX 99,999,999     $99,999,999.99          CODE XXXX 999,999
CODE XXXX 99,999,999      $99,999,999.99      CODE XXXX 99,999,999     $99,999,999.99          CODE XXXX 999,999
CODE XXXX 99,999,999      $99,999,999.99      CODE XXXX 99,999,999     $99,999,999.99          CODE XXXX 999,999
CODE XXXX 99,999,999      $99,999,999.99      CODE XXXX 99,999,999     $99,999,999.99          CODE XXXX 999,999
CODE XXXX 99,999,999      $99,999,999.99      CODE XXXX 99,999,999     $99,999,999.99          CODE XXXX 999,999
CODE XXXX 99,999,999      $99,999,999.99      CODE XXXX 99,999,999     $99,999,999.99          CODE XXXX 999,999
TOTAL  9,999,999,999   $9,999,999,999.99      CODE XXXX 99,999,999     $99,999,999.99          CODE XXXX 999,999

                                              TOTAL  9,999,999,999  $9,999,999,999.99          TOTAL 999,999,999
         CMS PREMIUM DOLLARS BILLED

         DEBIT                $999,999,999.99
         CREDIT               $999,999,999.99

         TOTAL BILLED      $9,999,999,999.99

                                             *** END OF REPORT ***

                                            *** NO DATA THIS RUN ***
```

3.8.1.4 Field Descriptions

Field	Description	Length	Data Type	DB Table	DB Attributes
Agency / Date	The Agency/Date field may contain the sub code effective date, MMYY, which is found right next to the sub code on the Billing A file. This same field may also have a three-character alphanumeric agency code for another state on the Buy-In Part A billing file.	4	Character	T_BUYA_BILL	CDE_BUY_AGENCY
Agency Code	Identifies the three-character code on the Buy-In Part A billing file that CMS has assigned each state. Refer to the Buy-In Manual for valid values.	3	Character	T_BUYA_BILL	CDE_BUY_AGENCY
Amount (Credits)	The total dollar amount for each credit transaction code appearing on the billing file.	11	Character	N/A	CALCULATED
Amount (Debits)	The total dollar amount for each debit transaction code appearing on the billing file.	11	Character	N/A	CALCULATED
Billing Dte	A four-character numeric code that identifies the month and year, MMYY, the State is billed for a member's premiums, as displayed on the Buy-In Part A billing file.	4	Number	T_BUYA_BILL	DTE_BILLING
Birth	This field contains either the member's date of birth (MMDDYY) or the new HIB on the Buy-In Part A billing file. Also, this position may contain an alphanumeric character for the last number in the date of birth if CMS shows a different DOB. This alphabetic character is equal to the new number, for example 1=A, 2=B and so on.	6	Number	T_RE_BASE	DTE_BIRTH

Field	Description	Length	Data Type	DB Table	DB Attributes
Credits (Billed)	This is the total dollar amount CMS is crediting FSSA for a member's Part A premium, and should equal total credit mentioned earlier.	12	Character	N/A	CALCULATED
Debits (Billed)	This is the total dollar amount CMS is billing FSSA for Part A premium, and should equal the total debit mention earlier.	12	Character	N/A	CALCULATED
Eff Date	The effective date of the transaction during which the member was accreted, deleted, or changed Buy-In Part A status as shown on the Buy-In Part A billing file. This field may be blank.	4	Number	T_BUYA_BILL	DTE_BILLING
First	Member's first name on the Buy-In Part A billing file.	7	Char	T_RE_BASE	NAM_FIRST
HIC	Member's 12-character numeric identification number on the Buy-In Part A billing file. This field may be all zeros or an invalid number sent by CMS.	12	Character	T_BUYA_BILL	ID_MEDICARE
Items (Credits)	The total number of records for each credit transaction code appearing on the billing file.	10	Character	N/A	CALCULATED
Items (Debits)	The total number of records for each debit transaction code appearing on the billing file.	10	Character	N/A	CALCULATED
Items (Misc) Items (Misc)	The total number of records for miscellaneous transaction codes appearing on the billing file.	10	Character	N/A	CALCULATED

Field	Description	Length	Data Type	DB Table	DB Attributes
Last	Member's last name on the Buy-In Part A billing file.	12	Char	T_RE_BASE	NAM_LAST
MI	Member's middle initial on the Buy-In Part A billing file.	1	Char	T_RE_BASE	NAM_MID_INIT
Medicaid ID	This is the member's 10-character numeric identification number on the Buy-In Part B billing file. This field may be all zeros or an invalid number sent by CMS.	10	Character	T_RE_BASE	ID_MEDICAID
Normal Billing	Includes all 41bb transaction codes from the billing file. The 41bb (41__) is an ongoing Buy-In Part A member. CMS has already bought this member in and continues to bill FSSA a monthly premium.	14	Character	N/A	CALCULATED
Premium Amount	A six-character numeric code describing the premium amount billed by CMS to the State for a member's Buy-In Part A premiums.	9	Character	T_BUYA_BILL	AMT_PREMIUM
Sex	Identifies member's numeric sex code on the Buy-In Part A billing file.	1	Character	T_RE_BASE	CDE_SEX
Sub	Identifies a one-character alphanumeric code on the Buy-In Part A billing file that conveys additional information in conjunction with designated transaction codes. Refer to the Buy-In manual for valid values.	1	Character	T_BUYA_BILL	CDE_BUY_SUB
Total (Credits)	Total number of records for all credits transaction code appearing on the billing file.	14	Character	N/A	CALCULATED

Field	Description	Length	Data Type	DB Table	DB Attributes
Total (Debits)	Total number of records for all debits transaction code appearing on the billing file.	14	Character	N/A	CALCULATED
Total (Misc)	Total number of records for all credit transaction codes appearing on the billing file.	11	Character	N/A	CALCULATED
Total Accretions	The enrollment of a member in the Buy-In Part A program. The total number of accretions on the Buy-In Part A billing file. The accretion codes are 11XX and 43XX. Refer to the Buy-In manual for the transaction codes.	14	Character	N/A	CALCULATED
Total Billed (Billed)	This is the total dollar amount CMS is billing FSSA for Buy-In Part A premiums, which is equal to the debits minus the credits.	14	Character	N/A	CALCULATED
Total Deletions	The removal of a member from the Buy-In Part A program. Total number of deletions on the Buy-In Part A billing file. The deletion codes are 14bb, 15bb, 16bb, 17XX, 42bb (42__), and 42XX. Refer to the Buy-In manual for the transaction codes.	14	Character	N/A	CALCULATED
Total Miscellaneous	Total number of all other transaction codes that are not accretions or deletions on the Buy-In Part A billing file. Refer to the Buy-In manual for the transaction codes.	14	Character	N/A	CALCULATED

Field	Description	Length	Data Type	DB Table	DB Attributes
Total Number of Records Received from CMS	Summary of all Normal Billing accretions, deletions, and miscellaneous transactions sent by CMS on the Buy-In Part A billing file and received by IFSSA.	14	Character	N/A	CALCULATED
Txn	The first two characters of the four-character code describing CMS' most recent response to State accretion, deletion, or changed records as shown on the Buy-In Part A billing file. The last two characters comprise the modifier code, which describes the State or EDS' action for that member (accretion, deletion, or change). Refer to the Buy-In manual for the transaction codes. The second two characters on the transaction codes may be zeros or blank. Refer to the Buy-In manual.	4	Character	T_BUYA_BILL	CDE_BUY_TXN

3.8.1.5 Associated Programs

Program	Description
bia1001m	Print Buy-In Part A Billing Report
copy2crld	CRLD copy
oraload	Oraload
oraload	Oraload
buypm606	Buy-In Transaction 23 filter program

Program	Description
buypmalt	Alternate Demographics Patch
buypmalt	Alternate Demographics Patch

3.8.1.6 Associated Requirements

ID
30.050.001A
30.090.001.001.2

3.8.1.7 Change Orders

ID	Name	Description
2259	Modify reports	There is a need to modify Buy-In reports.
3907	Buy A Billing errors	Multiple errors found in this report. Documentation has been attached.
459	Modify BIA-1001-M Report	There is a need to modify the BIA-1001-M report.
6693	Missing ID on report BIB-2001-M	The BIB-2001-M Report in Buyin the Medicaid ID is missing from the report. There is no way to identify what member is associated with the data. **03/21/2007 added clarification to indicate BIA-1001-M also applies to this Defect.

3.8.2 BIA-1002-M -- Buy-In Part A Input Transactions Within interChange

The Buy-In Part A Input Transactions Within interChange report is a paper copy of the accretion, deletion, or changes made to Buy-in Part A members by HMS in a given month. These updates are sent to CMS on a monthly file. The file itself is generated by HMS and is loaded into iC for historical and reporting purposes.

Selection criteria: If no parameter is passed in the command line, the date the Buy-In Part A billing file processed that contained this transaction must be between the first day and the end day of the month for which the report is run. Otherwise the date the buy-in Part A billing file processed that contained this transaction must be between the two optional dates passed in command line parameter.

3.8.2.1 Technical Name

BIA-1002-M

3.8.2.2 Sort Order

T_BUYA_PREM.CDE_BUY_TXN, T_BUYA_PREM.ID_MEDICARE

3.8.2.3 Buy-In Part A Input Transactions Within interChange Layout

```
Report  : BIA-1002-M                          COMMONWEALTH OF KENTUCKY                          Run Date: MM/DD/CCYY
Process : BUYJM002                       MEDICAID MANAGEMENT INFORMATION SYSTEM                 Run Time:   99:99:99
Location: BIA1002M                  BUY-IN PART A INPUT TRANSACTIONS WITHIN INTERCHANGE            Page:        999
                                                     MM/DD/CCYY

                                                                 AGENCY   EFF   END
MEDICAID ID  TXN HIC          LAST NAME    FIRST    MI G DOB     CODE   DATE  DATE
XXXXXXXXXX   XX  XXXXXXXXXXXX XXXXXXXXXXXX XXXXXXX X  X MMDDYY   XXX    MMYY  MMYY
XXXXXXXXXX   XX  XXXXXXXXXXXX XXXXXXXXXXXX XXXXXXX X  X MMDDYY   XXX    MMYY  MMYY
XXXXXXXXXX   XX  XXXXXXXXXXXX XXXXXXXXXXXX XXXXXXX X  X MMDDYY   XXX    MMYY  MMYY
XXXXXXXXXX   XX  XXXXXXXXXXXX XXXXXXXXXXXX XXXXXXX X  X MMDDYY   XXX    MMYY  MMYY
XXXXXXXXXX   XX  XXXXXXXXXXXX XXXXXXXXXXXX XXXXXXX X  X MMDDYY   XXX    MMYY  MMYY

                    TOTAL ACCRETIONS:                        99,999,999,999
                    TOTAL DELETIONS:                         99,999,999,999
                    TOTAL CHANGES:                           99,999,999,999

                    SUMMARY OF RECORDS SENT TO CMS:          99,999,999,999


                                        *** END OF REPORT ***

                                      *** NO DATA THIS RUN ***
```

3.8.2.4 Field Descriptions

Field	Description	Length	Data Type	DB Table	DB Attributes
Agency Code	This is the three-character value on the Buy-In State Agency Code.	3	Character	T_BUYA_PREM	CDE_AGENCY
Birth	This is the member's date of birth (MMDDYY).	6	Number	T_RE_BASE	DTE_BIRTH
Eff Date	This is the effective date (MMYY) needed for the transaction.	4	Number	T_BUYA_PREM	DTE_EFFECTIVE
End Date	This is the end date (MMYY) needed for the transaction.	4	Char	T_BUYA_PREM	DTE_75_STOP
First	This is the member's first name.	7	Character	T_RE_BASE	NAM_FIRST
HIC	This is the member's Medicare number.	12	Character	T_BUYA_PREM	ID_MEDICARE
Last	This is the member's last name.	12	Character	T_RE_BASE	NAM_LAST
MI	This is the member's middle initial.	1	Character	T_RE_BASE	NAM_MID_INIT
Medicaid ID	This is the member's 10-character member identification number.	10	Character	T_BUYA_PREM	ID_MEDICARE
Sex	This is the member's numeric sex code.	1	Character	T_RE_BASE	CDE_SEX
Summary Of Records Sent To CMS	This is the summary of all accretions, deletions, and changes requested by EDS or the State.	14	Character	N/A	CALCULATED
Total Accretions	This is the total number of accretions requested by EDS or the State.	14	Character	N/A	CALCULATED

Field	Description	Length	Data Type	DB Table	DB Attributes
Total Changes	This is the total number of changes requested by EDS or State.	14	Character	N/A	CALCULATED
Total Deletions	This is the total number of deletions requested by EDS or the State.	14	Character	N/A	CALCULATED
Txn	This is the Buy-In transaction code.	2	Character	T_BUYA_PREM	CDE_BUY_TXN

3.8.2.5 Associated Programs

Program	Description
copy2crld	CRLD copy
bia1002m	Print the Buy-In Part A List of Transactions Sent to Baltimore (Sending) report

3.8.2.6 Associated Requirements

ID
30.050.001A
30.090.001.001.2

3.8.2.7 Change Orders

ID	Name	Description
460	Modify BIA-1002-M Report	There is a need to add additional fields to report BIA-1002-M.

ID	Name	Description
6723	Wrong info on BIB-2002-M	The BIB-2002-M is displaying incorrect information. What populates this report? This is supposed to be only records that were sent to CMS. This report includes the pseudo 41 transactions which are not sent to CMS. The buy-in eligibility codes are alpha characters and are showing on this report as numeric. Why is there a zip code on this report? We do not send a zip code to CMS. Report description on the PWB needs to be updated to reflect the way Kentucky does Buy-In. For example, files are not sent to Baltimore. These are files that are sent. The wording of this description is very confusing.

3.8.3 BIA-1004-M -- Buy-In Part A Exception Error By Transaction Code

The Buy-In Part A Exception Error By Transaction Code report contains records from the billing file that need to be reviewed for different reasons. The following transaction codes always appear on the Buy-In Part A Exception Error By Transaction Code report: 1128, 1728, 20XX, 21XX, 24XX, 25XX, 27XX, 29XX, 30XX, 31XX and 49XX. The Buy-In Part A transaction codes definition indicates the additional codes that trigger certain records to appear on the Buy-In Part A Exception Error By Transaction Code report.

The purpose of the Buy-In Part A Exception Error By Transaction Code report is to identify the above listed codes from CMS. EDS reviews, researches and resolves any problems associated with these codes.

Selection criteria: If no parameter is passed in the command line, the date the Buy-In Part A billing file processed that contained this transaction must be between the first day and the end day of the month for which the report is run. Otherwise the date the Buy-In Part A billing file processed that contained this transaction must be between the two optional dates passed in command line parameter.

3.8.3.1 Technical Name

BIA-1004-M

3.8.3.2 Sort Order

T_BUYA_BILL.CDE_BUY_TXN, T_BUYA_BILL.CDE_BUY_SUB, T_BUYA_BILL.MISC_CDE_DTE, T_BUYA_BILL.ID_MEDICARE

3.8.3.3 Buy-In Part A Exception Error By Transaction Code Layout

```
Report   : BIA-1004-M                          COMMONWEALTH OF KENTUCKY                          Run Date: MM/DD/CCYY
Process  : BIAJM004                       MEDICAID MANAGEMENT INFORMATION SYSTEM                 Run Time:   99:99:99
Location: BIA1004M                 BUY-IN PART A EXCEPTION ERROR BY TRANSACTION CODE REPORT      Page:           999
                                                   MM/DD/CCYY

          AGENCY CODES                                                          AGENCY BILLING  EFF   SUR                PREMIUM
TXN  SUB /DATE  PG ST MEDICAID ID HIC           LAST NAME    FIRST    MI  G  BIRTH   CODE   DATE   DATE  CHARGE  SSN         AMOUNT
XXXX  X   XXXX  XX XX XXXXXXXXXX  XXXXXXXXXXXX  XXXXXXXXXXXX XXXXXXX X   X  MMDDYY  XXX    MMYY   MMYY    X     XXXXXXXXX $9,999.99
XXXX  X   XXXX  XX XX XXXXXXXXXX  XXXXXXXXXXXX  XXXXXXXXXXXX XXXXXXX X   X  MMDDYY  XXX    MMYY   MMYY    X     XXXXXXXXX $9,999.99
XXXX  X   XXXX  XX XX XXXXXXXXXX  XXXXXXXXXXXX  XXXXXXXXXXXX XXXXXXX X   X  MMDDYY  XXX    MMYY   MMYY    X     XXXXXXXXX $9,999.99
          TOTAL TRANSACTIONS FOR CODE XXXX: 999,999          PREMIUM:     $99,999,999.99

XXXX  X   XXXX  XX XX XXXXXXXXXX  XXXXXXXXXXXX  XXXXXXXXXXXX XXXXXXX X   X  MMDDYY  XXX    MMYY   MMYY    X     XXXXXXXXX $9,999.99
XXXX  X   XXXX  XX XX XXXXXXXXXX  XXXXXXXXXXXX  XXXXXXXXXXXX XXXXXXX X   X  MMDDYY  XXX    MMYY   MMYY    X     XXXXXXXXX $9,999.99
          TOTAL TRANSACTIONS FOR CODE XXXX: 999,999          PREMIUM:     $99,999,999.99


                                        ***   END OF REPORT   ***

                                        ***   NO DATA THIS RUN   ***
```

3.8.3.4 Field Descriptions

Field	Description	Length	Data Type	DB Table	DB Attributes
Agency Code	This is the three-character code on the Buy-In Part A Billing File that CMS has assigned each state. Refer to the State Buy-In manual for valid values.	3	Character	T_BUYA_BILL	CDE_AGENCY
Agency/Date	This may contain the sub code effective date (MMYY) which is found right next to the sub code on the Buy-In Part A Billing File. When clarifying an error code, this same field can instead have a three-character agency code for another state on the Buy-In Part A Billing file.	4	Character	T_BUYA_BILL	MISC_CDE_DATE
Billing Date	This is the four-character numeric code which identifies the month and year (MMYY) the State is billed for a member's premiums as displayed on the Buy-In Part A Billing file.	4	Number	T_BUYA_BILL	DTE_BILLING
Birth	This is the member's date of birth (MMDDYY) on the Buy-In Part A Premium S17 file.	6	Number	T_RE_BASE	DTE_BIRTH
Codes PG	This is the Buy-In program code.	2	Character		CALCULATED
Codes ST	This is the Buy-In status code.	2	Character		CALCULATED
Eff Date	This is the effective date of the transaction on which the member was accreted, deleted, or changed in Buy-In Part A as shown on the Buy-In Part A billing file.	4	Number	T_BUYA_BILL	DTE_EFFECTIVE
First Name	This is the member's first name on the Buy-In Part A billing file.	7	Character	T_RE_BASE	NAM_FIRST

Field	Description	Length	Data Type	DB Table	DB Attributes
HIC	This is the member's Medicare number on the Buy-In Part A billing file received.	12	Character	T_BUYA_BILL	ID_MEDICARE
Last Name	This is the member's last name on the Buy-In Part A billing file.	12	Character	T_RE_BASE	NAM_LAST
MI	This is the member's middle initial on the Buy-In Part A billing file.	1	Character	T_RE_BASE	NAM_MID_INIT
Medicaid ID	This is the member's 10-character numeric identification number on the Buy-In Part A billing file. This field may be all zeros or an invalid number sent by CMS.	10	Character	T_BUYA_BILL	ID_MEDICARE
Premium Amount	This is the premium amount billed by CMS to the State for a member's Buy-In Part A premiums.	9	Character	T_BUYA_BILL	AMT_PREMIUM
SSN	This is the member's Social Security number on the Buy-In Part A billing file.	9	Character	T_RE_BASE	NUM_SSN
Sex	This is the member's numeric sex code on the Buy-In Part A billing file.	1	Character	T_RE_BASE	CDE_SEX
Sub	This is the one-character code on the Buy-In Part A billing file that conveys additional information in conjunction with designated transaction codes. This field is applicable to a rejected accretion record, a duplicate accretion record or deletion record, or a state-submitted accretion record which matches a death deletion record. It will be blank in all other situations. Refer to the State Buy-In manual for valid values.	1	Character	T_BUYA_BILL	CDE_BUY_SUB

Field	Description	Length	Data Type	DB Table	DB Attributes
Sur Charge	A 'Y' in this field indicates a 10 percent surcharge for late enrollment.	1	Character	T_BUYA_BILL	IND_SURCHARGE
Txn	This is the Buy-In transaction code. The first two characters of a four-character code, the code represents either a response to a transaction the state sent or a transaction initiated by CMS. The last two characters are the modifier code, which describes the state's requested action for that beneficiary (accretion, deletion, or change). Refer to the State Buy-In manual for the transaction codes. The second two characters on the transaction codes may be zeros or blank.	4	Character	T_BUYA_BILL	CDE_BUY_TXN

3.8.3.5 Associated Programs

Program	Description
copy2crld	CRLD copy
bia1004m	Buy-In Part A Exception Error By Transaction Code

3.8.3.6 Associated Requirements

ID
30.050.001A
30.090.001.001.2

3.8.3.7 Change Orders

ID	Name	Description
2259	Modify reports	There is a need to modify Buy-In reports.
461	Modify BIA-1004-M Report	There is a need to modify the BIA-1004-M report.

3.8.4 BIA-1010-M -- Buy-In Part A Expenditure Report

The Buy-In Part A Expenditure Report is a monthly listing of Part A Buy-in premium amounts, broken down into sub-program codes and account numbers, and then separated into the three fund categories of Federal Match, State Match, and State Only.

Selection criteria: Date of transaction creation is between the start and end dates passed as parameters throughout the command-line. If no dates are provided, date of transaction is between the first and the end day of the month for which the report is run.

3.8.4.1 Technical Name

BIA-1010-M

3.8.4.2 Sort Order

T_BUYA_BILL.SAK_RECIP, T_BUYA_BILL.SAK_BUYIN, T_PUB_HLTH_PGM.CDE_HLTH_PGM

3.8.4.3 Buy-In Part A Expenditure Report Layout

```
Report  : BIA-1010-M                    COMMONWEALTH OF KENTUCKY                    Run Date: MM/DD/CCYY
Process : BIAJM010                  MEDICAID MANAGEMENT INFORMATION SYSTEM          Run Time:   99:99:99
Location: BIA1010M                     BUY-IN PART A EXPENDITURE REPORT             Page:           999
                                                MM/DD/CCYY

                 PCA CODE     FEDERAL MATCH      STATE MATCH       STATE ONLY           TOTAL
                999999999    99,999,999.99    99,999,999.99    99,999,999.99    999,999,999.99
                999999999    99,999,999.99    99,999,999.99    99,999,999.99    999,999,999.99
                999999999    99,999,999.99    99,999,999.99    99,999,999.99    999,999,999.99
                999999999    99,999,999.99    99,999,999.99    99,999,999.99    999,999,999.99
                999999999    99,999,999.99    99,999,999.99    99,999,999.99    999,999,999.99
                999999999    99,999,999.99    99,999,999.99    99,999,999.99    999,999,999.99
                999999999    99,999,999.99    99,999,999.99    99,999,999.99    999,999,999.99
                999999999    99,999,999.99    99,999,999.99    99,999,999.99    999,999,999.99

                                   *** END OF REPORT ***

                                   *** NO DATA THIS RUN ***
```

3.8.4.4 Field Descriptions

Field	Description	Length	Data Type	DB Table	DB Attributes
Federal Match	This is the amount of buy-in premium subject to federal matching funds.	13	Character	N/A	CALCULATED
PCA Code	This is the program cost accounting code against which the data is being accumulated.	9	Number	N/A	CALCULATED
State Match	This is the amount of buy-in premium subject to state matching funds.	13	Character	N/A	CALCULATED
State Only	This is the amount of buy-in premium for state only eligibility.	13	Character	N/A	CALCULATED
Total	This is the total of all amounts for all PCA codes.	13	Character	N/A	CALCULATED
Total of Federal Match	This is the total federal match amount.	13	Character	N/A	CALCULATED
Total of State Match	This is the total state match amount.	13	Character	N/A	CALCULATED
Total of State Only	This is the total state only amount.	13	Character	N/A	CALCULATED
Total(By PCA Code of the ""Federal Match"" , ""State Match"" and ""State Only"" amount)	This is the total of the following fields: "Federal Match" amount, "State Match" amount and "State Only" amount by PCA Code.	13	Character	N/A	CALCULATED

3.8.4.5 Associated Programs

Program	Description
bia1010m	Buy-In Part A Expenditure Report

Program	Description
copy2crld	CRLD copy

3.8.4.6 Associated Requirements

ID
30.050.001A
30.090.001.001.2

3.8.4.7 Change Orders

ID	Name	Description
3951	1010-M/2010-M date error	The date in the header is in the incorrect format. This bug applies to both reports (Buy-In Part A expenditures and Buyin Part B expenditures).
458	Use Standard Report Headings	There is a need to modify the standard Buy-In reports to use the Kentucky headings.

3.8.5 BIA-1011-M -- Buy-In Part A State Totals by Member Population

The Buy-In Part A State Totals by Member Population report provides a breakdown of the monthly Part A Buy-in premiums by member population, member count, and premium amount.

Selection Criteria: If no parameter is passed in the command line, the date the Buy-In Part A billing file processed that contained this transaction must be between the first day and the end day of the month for which the report is run. Otherwise, the date the Buy-In Part A billing file processed that contained this transaction must be between the two optional dates passed in command line parameter.

3.8.5.1 Technical Name

BIA-1011-M

3.8.5.2 Sort Order

T_CDE_AID.CDE_AID_CATEGORY

3.8.5.3 Buy-In Part A State Totals by Member Population Layout

```
Report  : BIA-1011-M                          COMMONWEALTH OF KENTUCKY                          Run Date: MM/DD/CCYY
Process : BIAJM011                         MEDICAID MANAGEMENT INFORMATION SYSTEM               Run Time:   99:99:99
Location: BIA1011M                     BUY-IN PART A TOTALS BY POPULATION/STATUS REPORT             Page:        999
                                                      MM/DD/CCYY

          POPULATION/STATUS                    MEMBER COUNT                    PREMIUM AMOUNT
              XX/XX                             99,999,999                      99,999,999.99
              XX/XX                             99,999,999                      99,999,999.99
              XX/XX                             99,999,999                      99,999,999.99
              XX/XX                             99,999,999                      99,999,999.99
              XX/XX                             99,999,999                      99,999,999.99
              XX/XX                             99,999,999                      99,999,999.99

                                          *** END OF REPORT ***

                                         *** NO DATA THIS RUN ***
```

3.8.5.4 Field Descriptions

Field	Description	Length	Data Type	DB Table	DB Attributes
Member Count	This is the number of members in this program code.	10	Character	N/A	CALCULATED
Member Population	This is the program code to which the population is accumulated.	2	Character	N/A	CALCULATED
Member Status	This is the status code to which the population is accumulated.	2	Character	N/A	CALCULATED
Premium Amount	This is the total premium for this program code.	13	Character	N/A	CALCULATED

3.8.5.5 Associated Programs

Program	Description
bia1011m	Print Buy-In Part A State Totals by Member Population Report
copy2routedir	Copy Reports to Router

3.8.5.6 Associated Requirements

ID
30.050.001A
30.090.001.001.2

3.8.5.7 Change Orders

ID	Name	Description
463	Modify BIA-1011-M Report	There is a need to modify the BIA-1011-M report.

3.8.6 BIA-1012-M -- Buy-In Part A Conditional

The Buy-In Part A Conditional report lists members who are conditionally entitled to Medicare Part A due to a conditional entitlement date (Z99 entitlement date which comes from MEIN).

Selection Criteria: If no parameter is passed in the command line, the date the Buy-In Part A billing file processed that contained this transaction must be between the first day and the end day of the month for which the report is run, else the date the Buy-In Part A billing file processed that contained this transaction must be between the two optional dates passed in command line parameter.

3.8.6.1 Technical Name

BIA-1012-M

3.8.6.2 Sort Order

T_RE_BASE.ID_MEDICAID

3.8.6.3 Buy-In Part A Conditional Layout

```
Report  : BIA-1012-M                          COMMONWEALTH OF KENTUCKY                          Run Date: MM/DD/CCYY
Process : BUYJM012                       MEDICAID MANAGEMENT INFORMATION SYSTEM                 Run Time:   99:99:99
Location: BIA1012M                          BUY-IN PART A CONDITIONAL REPORT                    Page:          999
                                                     MM/DD/CCYY

                MEDICAID ID    LAST NAME                    FIRST NAME       MI   BIRTH DATE   Z99 ENTITLEMENT DATE
                XXXXXXXXXXXX   XXXXXXXXXXXXXXXXXXXXXXXXXX   XXXXXXXXXXXXXXXX X    MM/DD/CCYY   MM/DD/CCYY
                XXXXXXXXXXXX   XXXXXXXXXXXXXXXXXXXXXXXXXX   XXXXXXXXXXXXXXXX X    MM/DD/CCYY   MM/DD/CCYY
                XXXXXXXXXXXX   XXXXXXXXXXXXXXXXXXXXXXXXXX   XXXXXXXXXXXXXXXX X    MM/DD/CCYY   MM/DD/CCYY
                XXXXXXXXXXXX   XXXXXXXXXXXXXXXXXXXXXXXXXX   XXXXXXXXXXXXXXXX X    MM/DD/CCYY   MM/DD/CCYY
                XXXXXXXXXXXX   XXXXXXXXXXXXXXXXXXXXXXXXXX   XXXXXXXXXXXXXXXX X    MM/DD/CCYY   MM/DD/CCYY
                XXXXXXXXXXXX   XXXXXXXXXXXXXXXXXXXXXXXXXX   XXXXXXXXXXXXXXXX X    MM/DD/CCYY   MM/DD/CCYY
                XXXXXXXXXXXX   XXXXXXXXXXXXXXXXXXXXXXXXXX   XXXXXXXXXXXXXXXX X    MM/DD/CCYY   MM/DD/CCYY
                XXXXXXXXXXXX   XXXXXXXXXXXXXXXXXXXXXXXXXX   XXXXXXXXXXXXXXXX X    MM/DD/CCYY   MM/DD/CCYY
                XXXXXXXXXXXX   XXXXXXXXXXXXXXXXXXXXXXXXXX   XXXXXXXXXXXXXXXX X    MM/DD/CCYY   MM/DD/CCYY
                XXXXXXXXXXXX   XXXXXXXXXXXXXXXXXXXXXXXXXX   XXXXXXXXXXXXXXXX X    MM/DD/CCYY   MM/DD/CCYY

                                        *** END OF REPORT ***

                                      *** NO DATA THIS RUN ***
```

3.8.6.4 Field Descriptions

Field	Description	Length	Data Type	DB Table	DB Attributes
Birth Date	This is the member's date of birth (MMDDCCYY) on the Buy-In Part A billing file.	8	Number	T_RE_BASE	DTE_BIRTH
First	This is the member's first name on the Buy-In Part A billing file.	7	Character	T_RE_BASE	NAM_FIRST
Last	This is the member's last name on the Buy-In Part A billing file.	12	Character	T_RE_BASE	NAM_LAST
MI	This is the member's middle initial on the Buy-In Part A billing file.	1	Character	T_RE_BASE	NAM_MID_INIT
Medicaid ID	This is the member's 11-character numeric identification number on the Buy-In Part B billing file.	12	Character	T_RE_BASE	ID_MEDICAID
Z99 Entitlement Date	This is the member's date of conditional entitlement (MMYY).	4	Number	N/A	CALCULATED

3.8.6.5 Associated Programs

Program	Description
bia1012m	Buy-In Part A Conditional Report services utilization report
copy2routedir	Copy Reports to Router

3.8.6.6 Associated Requirements

ID
30.050.001A
30.090.001.001.2

3.8.6.7 Change Orders

ID	Name	Description
458	Use Standard Report Headings	There is a need to modify the standard Buy-In reports to use the Kentucky headings.

3.8.7 BIA-1013-M -- Buy-In Part A Premium Totals

The Buy-In Part A Premium Totals report identifies the Medicare Part A premium amount billed to the state by CMS for the current billing month. The billing month is the month following the month the billing file is received. This report reflects the amount billed and breaks down the amounts by the categories of assistance which qualify for Part A Buy-in (QMB, QMB Dual and QDWI), and by ongoing billing, new accretions, and deletions. Members who have QDWI qualify to have their Medicare Part A premiums paid by the state. The Other category includes members who do not have a BID number on the billing file, or numbers which cannot be matched to a member. The category headers are: QMB, QMB Dual, QDWI, and Medical Assistance Only (MAO)/Other. The category header section contains the individual categories for which premiums are paid. They include QMB, QMB Dual, QDWI, MAO/Other, and Total.

The purpose of the Buy-In Part A Control report is to reflect the amount CMS is billing the State by category for Medicare Part A premiums in the given billing month, and to assist in the calculation of the amount to be paid to CMS for Medicare Part A Buy-In.

Selection criteria: Date of transaction creation is between the start and end dates passed as parameters throughout the command-line. If no dates are provided, date of transaction is between the first and the end day of the month for which the report is run.

3.8.7.1 Technical Name

BIA-1013-M

3.8.7.2 Sort Order

T_BUYA_BILLI.CDE_BUY_TXN, T_RE_ELIG.SAK_PUB_HLTH

3.8.7.3 Buy-In Part A Premium Totals Layout

```
Report  : BIA-1013-M                          COMMONWEALTH OF KENTUCKY                                  Run Date: MM/DD/CCYY
Process : BIAJM013                          MEDICAID MANAGEMENT INFORMATION SYSTEM                      Run Time:   99:99:99
Location: BIA1013M                            BUY-IN PART A PREMIUM TOTALS REPORT                       Page:          999
                                                      MM/DD/CCYY

                 ONGOING BILLING          NEW ACCRETIONS          DELETIONS                      TOTALS
 CATEGORY        QTY            AMT       QTY            AMT       QTY            AMT          QTY            AMT
   QMB         99,999  $99,999,999.99   99,999  $99,999,999.99   99,999  $99,999,999.99    999,999  $999,999,999.99
   QMB DUAL    99,999  $99,999,999.99   99,999  $99,999,999.99   99,999  $99,999,999.99    999,999  $999,999,999.99
   QDWI        99,999  $99,999,999.99   99,999  $99,999,999.99   99,999  $99,999,999.99    999,999  $999,999,999.99
   MAO/OTHER   99,999  $99,999,999.99   99,999  $99,999,999.99   99,999  $99,999,999.99    999,999  $999,999,999.99

   CURRENT MONTHS BILLED:                 99,999,999.99
   PAST MONTHS BILLED:                    99,999,999.99
   TOTAL CREDIT:                          99,999,999.99

                                          *** END OF REPORT ***

                                         *** NO DATA THIS RUN ***
```

3.8.7.4 Field Descriptions

Field	Description	Length	Data Type	DB Table	DB Attributes
Current Months Billed	This is the dollar amount of all transactions on the billing file for the current month, including all code 41bb transactions. In addition, codes 11XX and 17XX have a one-month premium (included in current months billed) and may also have past month premiums (included in past months billed).	13	Character	N/A	CALCULATED
Deletions	These are the totals for each of the following programs: QMB, QMB Dual, QDWI, Other, and Total.	13	Character	N/A	CALCULATED

Field	Description	Length	Data Type	DB Table	DB Attributes
MAO/Other	This is the total premiums for members on the billing file who do not have a BID number or whose number does not have a match in the Eligibility panel.	13	Character	N/A	CALCULATED
New Accretions	These are the totals for each of the following programs: QMB, QMB Dual, QDWI, Other, and Total.	13	Character	N/A	CALCULATED
Ongoing Billing	These are the totals for each of the following programs: QMB, QMB Dual, QDWI, Other, and Total.	13	Character	N/A	CALCULATED
Past Months Billed	This is the dollar amount of all transactions on the billing file for the past months. To determine this number, the system identifies transactions with codes 11XX and 17XX. If the effective date of those transactions is the current billing month, it is added to current months billed. If the effective date is less than the current billing month, one month is added to current months billed and the rest of the months are added to past months billed. The same calculation applies to the two transaction code pairs 1172/1772 and 1175/1776.	13	Character	N/A	CALCULATED
QDWI	This is the total premiums for qualified disabled working individuals who are not entitled to benefits.	13	Character	N/A	CALCULATED
QMB	This is the total premiums for a qualified Medicare beneficiary.	13	Character	N/A	CALCULATED
QMB Dual	This is the total premium for a qualified Medicare beneficiary with dual eligibility.	13	Character	N/A	CALCULATED

Field	Description	Length	Data Type	DB Table	DB Attributes
Total	A total of all the above categories from the billing file. Each of the above categories is divided into Ongoing Billing, New Accretions, Deletions, and Total Billing, depending upon the reported transaction codes.	13	Character	N/A	CALCULATED
Total Billing	This is the balance of the totals of Ongoing Billing plus the New Accretions, minus the Deletions for each program.	13	Character	N/A	CALCUALTED
Total Credit	This is the dollar amount for which a credit was received by the State. This includes all the 42bb and 42XX transaction codes. The whole dollar amount, with or without an effective date, is added to this field.	13	Character	N/A	CALCULATED

3.8.7.5 Associated Programs

Program	Description
bia1013m	Buy-In Part A Premium Totals
copy2routedir	Copy Reports to Router

3.8.7.6 Associated Requirements

ID
30.050.001A
30.090.001.001.2

3.8.7.7 Change Orders

ID	Name	Description
464	Modify BIA-1013-M Report	There is a need to modify the BIA-1013-M report.

3.8.8 BIB-2001-M -- Buy-In Part B Billing (Receiving)

The Buy-In Part B Billing (Receiving) report is a paper copy of the system-generated monthly file from CMS. This report informs the state of the status of Buy-in Part B Medicaid members by using transaction codes to communicate an update, or an acknowledgment of state accretion, deletion or change. The purpose of the Buy-In Part B Billing report is to display CMS' current full listing of Buy-In Part B billing records and acknowledgments of state accretion, deletion, and changed records.

Selection Criteria: If no parameter is passed in the command line, the date the Buy-In Part B billing file processed that contained this transaction must be between the first day and the end day of the month for which the report is run. Otherwise, the date the Buy-In Part B billing file processed that contained this transaction must be between the two optional dates passed in command line parameter.

3.8.8.1 Technical Name

BIB-2001-M

3.8.8.2 Sort Order

T_BUYB_BILL.CDE_BUY_TXN, T_BUYB_BILL.CDE_BUY_SUB, T_BUYB_BILL.MISC_CDE_DTE, T_BUYB_BILL.ID_MEDICARE

3.8.8.3 Buy-In Part B Billing (Receiving) Layout

For readability, this report layout appears on the next page.

```
Report  : BIB-2001-M                          COMMONWEALTH OF KENTUCKY                                  Run Date: MM/DD/CCYY
Process : BIBJM001                     MEDICAID MANAGEMENT INFORMATION SYSTEM                          Run Time:   99:99:99
Location: BIB2001M                    BUY-IN PART B BILLING (RECEIVING) REPORT                         Page:            999
                                                   MM/DD/CCYY

                                                                                AGENCY BILL        EFF                      REDUCED      PREMIUM
MEDICAID ID  TXN SUB  HIC          LAST NAME    FIRST    MI G DOB              CODE  DATE         DATE       BIEC RIC  PREMIUM       AMOUNT
XXXXXXXXXX   XXXX X   XXXXXXXXXXXX XXXXXXXXXXXX XXXXXXX X  X MM/DD/CCYY  XXX   MM/DD/CCYY  MM/DD/CCYY  X    X   9999.99   $9,9999.99
XXXXXXXXXX   XXXX X   XXXXXXXXXXXX XXXXXXXXXXXX XXXXXXX X  X MM/DD/CCYY  XXX   MM/DD/CCYY  MM/DD/CCYY  X    X   9999.99   $9,9999.99
XXXXXXXXXX   XXXX X   XXXXXXXXXXXX XXXXXXXXXXXX XXXXXXX X  X MM/DD/CCYY  XXX   MM/DD/CCYY  MM/DD/CCYY  X    X   9999.99   $9,9999.99
XXXXXXXXXX   XXXX X   XXXXXXXXXXXX XXXXXXXXXXXX XXXXXXX X  X MM/DD/CCYY  XXX   MM/DD/CCYY  MM/DD/CCYY  X    X   9999.99   $9,9999.99

    NORMAL BILLING:                                  99,999,999,999
    TOTAL ACCRETIONS:                                99,999,999,999
    TOTAL DELETIONS:                                 99,999,999,999
    TOTAL MISCELLANEOUS:                             99,999,999,999

    TOTAL NUMBER OF RECORDS RECEIVED FROM CMS:       99,999,999,999
```

```
Report  : BIB-2001-M                          COMMONWEALTH OF KENTUCKY                                  Run Date: MM/DD/CCYY
Process : BIBJM001                     MEDICAID MANAGEMENT INFORMATION SYSTEM                          Run Time:   99:99:99
Location: BIB2001M                    BUY-IN PART B BILLING (RECEIVING) REPORT                         Page:            999
                                                   MM/DD/CCYY

          ----------- DEBITS -----------            ----------- CREDITS -------------          -- MISCELLANEOUS --
          ITEMS                AMOUNT                   ITEMS                AMOUNT                   ITEMS
CODE XXXX 99,999,999       $99,999,999.99       CODE XXXX 99,999,999      $99,999,999.99       CODE XXXX 999,999
CODE XXXX 99,999,999       $99,999,999.99       CODE XXXX 99,999,999      $99,999,999.99       CODE XXXX 999,999
CODE XXXX 99,999,999       $99,999,999.99       CODE XXXX 99,999,999      $99,999,999.99       CODE XXXX 999,999
CODE XXXX 99,999,999       $99,999,999.99       CODE XXXX 99,999,999      $99,999,999.99       CODE XXXX 999,999
CODE XXXX 99,999,999       $99,999,999.99       CODE XXXX 99,999,999      $99,999,999.99       CODE XXXX 999,999
CODE XXXX 99,999,999       $99,999,999.99       CODE XXXX 99,999,999      $99,999,999.99       CODE XXXX 999,999
TOTAL  9,999,999,999   $9,999,999,999.99        CODE XXXX 99,999,999      $99,999,999.99       CODE XXXX 999,999

                                                TOTAL  9,999,999,999  $9,999,999,999.99        TOTAL 999,999,999
         CMS PREMIUM DOLLARS BILLED

         DEBIT                 $999,999,999.99
         CREDIT                $999,999,999.99

         TOTAL BILLED       $9,999,999,999.99

                                             *** END OF REPORT ***

                                            *** NO DATA THIS RUN ***
```

3.8.8.4 Field Descriptions

Field	Description	Length	Data Type	DB Table	DB Attributes
(CMS Prem) Credits	This is the total dollar amount CMS is crediting the State for Buy-In Part B premium, and should equal the (Credits) Total field.	12	Character	N/A	CALCULATED
(CMS Prem) Debits	This is the total dollar amount CMS is billing the State for Buy-In Part B premium, and should equal the (Debits) Total field.	12	Character	N/A	CALCULATED
(CMS Prem) Total Billed	This is the total dollar amount CMS is billing the State for Buy-In Part B premiums, which is equal to the debits minus the credits.	14	Character	N/A	CALCULATED
(Credits Cde) Total Items	This is the total number of records for all credit transaction codes appearing on the billing file.	13	Character	N/A	CALCULATED
(Credits) Amount	This is the total dollar amount for each credit transaction code appearing on the billing file.	11	Character	N/A	CALCULATED
(Credits) Items	This is the total number of records for each credit transaction code appearing on the billing file.	10	Character	N/A	CALCULATED
(Credits) Total	This is the total dollar amount for all credit transaction codes appearing on the billing file.	14	Character	N/A	CALCULATED
(Debits Cde) Total Items	This is the total number of records for all debit transaction codes appearing on the billing file.	13	Character	N/A	CALCULATED
(Debits) Amount	This is the total dollar amount for each debit transaction code appearing on the billing file.	11	Character	N/A	CALCULATED

Field	Description	Length	Data Type	DB Table	DB Attributes
(Debits) Items	This is the total number of records for each debit transaction code appearing on the billing file.	10	Character	N/A	CALCULATED
(Debits) Total	This is the total dollar amount for all debit transaction codes appearing on the billing file.	14	Character	N/A	CALCULATED
(Misc Cde) Items	This is the total number of records for miscellaneous transaction codes appearing on the billing file.	7	Character	N/A	CALCULATED
(Misc Cde) Total	This is the total number of records for all miscellaneous transaction codes appearing on the billing file.	11	Character	N/A	CALCULATED
Agency / Date	The Agency/Date field may contain the sub code effective date, MMYY, which is found right next to the sub code on the Billing B file. This field may also have a three-character alphanumeric agency code for another state on the Buy-In Part B billing file.	4	Character	T_BUYB_BILL	MISC_CDE_DATE
Agency Code	Identifies the three-character code on the Buy-In Part B billing file that CMS has assigned each state. Refer to the Buy-In manual for valid values.	3	Character	T_BUYB_BILL	CDE_BUY_AGENCY
Billing Dte	A four-character numeric code that identifies the month and year, MMYY, the State is billed for a member's premiums, as displayed on the Buy-In Part B billing file.	4	Number	T_BUYB_BILL	DTE_BILLING

Field	Description	Length	Data Type	DB Table	DB Attributes
Birth	This is the beneficiary's date of birth (MMDDYY). Also, this position may contain an alphanumeric character for the last number in the date of birth if CMS shows a different DOB. This alphabetic character is equal to the new number, for example 1=A, 2=B and so on.	6	Number	T_RE_BASE	DTE_BIRTH
Credits Codes	The transaction codes used by CMS to inform the State of overpayments for Buy-In Part B premium are as follows: 14bb, 15bb, 16bb, 17XX, 42bb, and 42XX. Refer to the State Buy-In manual for the transaction codes.	4	Character	N/A	CALCULATED
Debits Codes	The transaction codes are used by CMS to inform the State that beneficiaries have been bought in transaction code (41bb) or are in the process of being bought in transaction code (11XX), having their premium paid, or are having a debit adjustment with transaction code (43XX) for these beneficiaries. Refer to the State Buy-In manual for the transaction codes.	4	Character	N/A	CALCULATED
Eff Date	The effective date of the transaction during which the member was accreted, deleted, or changed Buy-In Part B status as shown on the Buy-In Part B billing file. This field may be blank.	4	Number	T_BUYB_BILL	DTE_EFFECTIVE

Field	Description	Length	Data Type	DB Table	DB Attributes
Elig Code	Identifies the one-character numeric code used to describe the category of assistance the member is receiving. Refer to the Buy-In manual for valid values.	1	Character	T_BUYB_BILL	CDE_BUY_ELIG
First	The member's first name on the Buy-In Part B billing file.	7	Char	T_RE_BASE	NAM_FIRST
HIC	The member's 12-character numeric identification number on the Buy-In Part B billing file. This field may be all zeros or an invalid number sent by CMS.	12	Character	T_BUYB_BILL	ID_MEDICARE
Last	The member's last name on the Buy-In Part B billing file.	12	Char	T_RE_BASE	NAM_LAST
Liv Arg	A one-character alphabetic code of "D," which indicates that the beneficiary is a resident of a Title XIX institution. This field is applicable to deletion records. This is also the last character of a NEW HIB number.	1	Character	T_BUYB_BILL	CDE_BUY_LIV_ARNG
MI	The member's middle initial on the Buy-In Part B billing file.	1	Char	T_RE_BASE	NAM_MID_INIT
Medicaid ID	This is the beneficiary's 11-character numeric identification number on the Buy-In Part B billing file. This field may be all zeros or an invalid number sent by CMS.	12	Character	T_RE_BASE	ID_MEDICAID

Field	Description	Length	Data Type	DB Table	DB Attributes
Miscellaneous Codes	These are transaction codes used by CMS to inform the State of errors on the previous month's Premium 170 file, and various changes in CMS' or SSA's records, such as the status of a case. The miscellaneous codes are: 20XX, 21XX, 23XX, 24XX, 25XX, 27XX, 29XX, 30XX, 31XX, 49XX. Refer to the State Buy-In manual for the transaction codes.	4	Character	N/A	CALCULATED
Normal Billing	Includes all 41bb transaction codes from the billing file. The 41bb (41__) is an ongoing Buy-In Part B member. CMS has already bought this member in and continues to bill FSSA a monthly premium.	14	Character	N/A	CALCULATED
Premium Amount	A six-character numeric code describing the premium amount billed by CMS to the State for a member's Buy-In Part B premiums.	9	Character	T_BUYB_BILL	AMT_PREMIUM
STS Code	The status code is a one-character code that indicates the member's SSI status. Refer to the Buy-In manual for status code description.	1	Character	T_BUYB_BILL	CDE_BUY_SSI
Sex	Identifies member's numeric sex code on the Buy-In Part B billing file.	1	Character	T_RE_BASE	CDE_SEX
Sub	Identifies a one-character alphanumeric code on the Buy-In Part B billing file that conveys additional information in conjunction with designated transaction codes. Refer to the Buy-In manual for valid values.	1	Character	T_BUYB_BILL	CDE_BUY_SUB

Field	Description	Length	Data Type	DB Table	DB Attributes
Total Accretions	The enrollment of a member in the Buy-In Part B program. The total number of accretions on the Buy-In Part B billing file. The accretion codes are 11XX and 43XX. Refer to the Buy-In manual for the transaction codes.	14	Character	N/A	CALCULATED
Total Deletions	The removal of a member from the Buy-In Part B program. Total number of deletions on the Buy-In Part B billing file. The deletion codes are 14bb, 15bb, 16bb, 17XX, 42bb (42__), and 42XX. Refer to the Buy-In manual for the transaction codes.	14	Character	N/A	CALCULATED
Total Miscellaneous	Total number of all other transaction codes that are not accretions or deletions on the Buy-In Part B billing file. Refer to the Buy-In manual for the transaction codes.	14	Character	N/A	CALCULATED
Total Number of Records Received from CMS	Summary of all normal billing accretions, deletions, and miscellaneous transactions sent by CMS on the Buy-In Part B billing file and received by IFSSA.	14	Character	N/A	CALCULATED

Field	Description	Length	Data Type	DB Table	DB Attributes
Txn	This is the first two characters of the four-character code describing CMS' most recent response to State accretion, deletion, or changed records as shown on the Buy-In Part B billing file. The last two characters constitute the modifier code, which describes the State or EDS action for that member (accretion, deletion, or change). Refer to the Buy-In manual for the transaction codes. The second two characters on the transaction codes may be zeros or blank. Refer to the Buy-In manual.	4	Character	T_BUYB_BILL	CDE_BUY_TXN

3.8.8.5 Associated Programs

Program	Description
bib2001m	Print Buy-In Part B Billing Report
copy2routedir	Copy Reports to Router

3.8.8.6 Associated Requirements

ID
30.050.001A
30.090.001.001.2

3.8.8.7 Change Orders

ID	Name	Description
2259	Modify reports	There is a need to modify Buy-In reports.

ID	Name	Description
3908	Buy B Billing errors	Multiple errors found in this report. Documentation has been attached.
465	Modify BIB-2001-M Report	There is a need to modify the BIB-2001-M report.

3.8.9 BIB-2002-M -- Buy-In Part B Input Transactions Within interChange

Buy-In Part B Input Transactions Within interChange report is a paper copy of the accretion, deletion, or changes made to Buy-in Part B members by HMS in a given month. These updates are sent to CMS on a monthly file. The file itself is generated by HMS and is loaded into iC for historical and reporting purposes.

Selection criteria: If no parameter is passed in the command line, the date the Buy-In Part B billing file processed that contained this transaction must be between the first day and the end day of the month for which the report is run. Otherwise, the date the Buy-In Part B billing file processed that contained this transaction must be between the two optional dates passed in command line parameter.

3.8.9.1 Technical Name

BIB-2002-M

3.8.9.2 Sort Order

T_BUYA_PREM.CDE_BUY_TXN, T_BUYA_PREM.ID_MEDICARE

For readabilitythe layout displays on the next page.

3.8.9.3 Buy-In Part B Input Transactions Within interChange Layout

```
Report  : BIB-2002-M                          COMMONWEALTH OF KENTUCKY                          Run Date: MM/DD/CCYY
Process : BIBJM002                       MEDICAID MANAGEMENT INFORMATION SYSTEM                 Run Time:   99:99:99
Location: BIB2002M                  BUY-IN PART B INPUT TRANSACTIONS WITHIN INTERCHANGE         Page:          999
                                                     MM/DD/CCYY

                                                                  AGENCY  EFF  END  ELIG
MEDICAID ID  TXN HIC          LAST NAME    FIRST    MI G DOB      CODE   DATE DATE CODE
XXXXXXXXXX   XX  XXXXXXXXXXXX XXXXXXXXXXXX XXXXXXX X  X MMDDYY    XXX    MMYY MMYY  X
XXXXXXXXXX   XX  XXXXXXXXXXXX XXXXXXXXXXXX XXXXXXX X  X MMDDYY    XXX    MMYY MMYY  X
XXXXXXXXXX   XX  XXXXXXXXXXXX XXXXXXXXXXXX XXXXXXX X  X MMDDYY    XXX    MMYY MMYY  X
XXXXXXXXXX   XX  XXXXXXXXXXXX XXXXXXXXXXXX XXXXXXX X  X MMDDYY    XXX    MMYY MMYY  X
XXXXXXXXXX   XX  XXXXXXXXXXXX XXXXXXXXXXXX XXXXXXX X  X MMDDYY    XXX    MMYY MMYY  X
XXXXXXXXXX   XX  XXXXXXXXXXXX XXXXXXXXXXXX XXXXXXX X  X MMDDYY    XXX    MMYY MMYY  X
XXXXXXXXXX   XX  XXXXXXXXXXXX XXXXXXXXXXXX XXXXXXX X  X MMDDYY    XXX    MMYY MMYY  X

                    TOTAL ACCRETIONS:                        99,999,999,999
                    TOTAL DELETIONS:                         99,999,999,999
                    TOTAL CHANGES:                           99,999,999,999

                    SUMMARY OF RECORDS SENT TO CMS:          99,999,999,999


                                   *** END OF REPORT ***

                                 *** NO DATA THIS RUN ***
```

3.8.9.4 Field Descriptions

Field	Description	Length	Data Type	DB Table	DB Attributes
Agency Code	This is the three-character agency code.	3	Character	T_BUYB_PREM	CDE_AGENCY
Birth	This is the member's date of birth (MMDDYY).	6	Number	T_RE_BASE	DTE_BIRTH
Eff Date	This is the effective date (MMYY) needed for the transaction.	4	Number	T_BUYB_PREM	DTE_EFFECTIVE

Field	Description	Length	Data Type	DB Table	DB Attributes
Elig Code	This is the two-character alphabetic code used to identify the specific category of assistance.	1	Character	T_BUYB_PREM	CDE_BUY_ELIG
End Date	This is the end date (MMYY) needed for the transaction.	4	Number	T_BUYB_PREM	DTE_75_STOP
First	This is the member's first name.	7	Character	T_RE_BASE	NAM_FIRST
HIC	This is the member's Medicare number.	12	Character	T_BUYB_PREM	ID_MEDICARE
Last	This is the member's last name.	12	Character	T_RE_BASE	NAM_LAST
MI	This is the member's middle initial.	1	Character	T_RE_BASE	NAM_MID_INIT
Medicaid ID	This is the member's 11-character ID number.	11	Character	T_BUYB_PREM	ID_MEDICARE
Sex	This is the member's numeric sex code.	1	Character	T_RE_BASE	CDE_SEX
Summary Of Records Sent To CMS	This is the summary of all accretions, deletions, and changes requested by EDS or the State.	14	Character		CALCULATED
Total Accretions	This is the total number of accretions requested by EDS or the State.	14	Character		CALCULATED
Total Changes	This is the total number of changes requested by EDS or the State.	14	Character		CALCULATED
Total Deletions	This is the total number of deletions requested by EDS or the State.	14	Character		CALCULATED

Field	Description	Length	Data Type	DB Table	DB Attributes
Txn	This is the Buy-In transaction code.	2	Character	T_BUYB_PREM	CDE_BUY_TXN
Zip	This is the member's zip code.	5	Number	T_RE_BASE	ADR_ZIP_CODE

3.8.9.5 Associated Programs

Program	Description
bib2002m	Buy-In Part B List of Transactions Sent to Baltimore (Sending)
copy2routedir	Copy Reports to Router

3.8.9.6 Associated Requirements

ID
30.050.001A
30.090.001.001.2

3.8.9.7 Change Orders

ID	Name	Description
466	Modify BIB-2002-M Report	There is a need to modify the BIB-2002-M report.

ID	Name	Description
6723	Wrong info on BIB-2002-M	The BIB-2002-M is displaying incorrect information. What populates this report? This is supposed to be only records that were sent to CMS. This report includes the pseudo 41 transactions which are not sent to CMS. The buy-in eligibility codes are alpha characters and are showing on this report as numeric. Why is there a zip code on this report? We do not send a zip code to CMS. Report description on the PWB needs to be updated to reflect the way Kentucky does Buy-In. For example, files are not sent to Baltimore. These are files that are sent. The wording of this description is very confusing.

3.8.10 BIB-2004-M -- Buy-In Part B Exception Error By Transaction Code

The Buy-In Part B Exception Error By Transaction Code report contains records from the billing file that need to be reviewed for different reasons.

The following transaction codes always appear on the Buy-In Part B Exception Error By Transaction Code report: 1125, 1128, 1165, 1167, 1725, 1728, 18XX, 19XX, 20XX, 21XX, 22XX, 24XX, 25XX, 27XX, 28XX, 29XX, 30XX, 31XX, 32XX, 33XX, 3662 and 49XX.

The Buy-in Part B transaction codes definition indicates the additional codes that trigger certain records to appear on the Buy-In Part B Exception Error By Transaction Code report.

The purpose of the Buy-In Part B Exception Error By Transaction Codes report is to identify the above listed codes from CMS. EDS and the state review research and resolve any problems associated with these codes.

Selection criteria: If no parameter is passed in the command line, the date the Buy-In Part B billing file processed that contained this transaction must be between the first day and the end day of the month for which the report is run. Otherwise the date the Buy-In Part B billing file processed that contained this transaction must be between the two optional dates passed in command line parameter.

3.8.10.1 Technical Name

BIB-2004-M

3.8.10.2 Sort Order

T_BUYB_BILL.CDE_BUY_TXN, T_BUYB_BILL.CDE_BUY_SUB, T_BUYB_BILL.MISC_CDE_DTE, T_BUYB_BILL.ID_MEDICARE

For readabilitythe layout displays on the next page.

3.8.10.3 Buy-In Part B Exception Error By Transaction Code Layout

```
Report  : BIB-2004-M                          COMMONWEALTH OF KENTUCKY                          Run Date: MM/DD/CCYY
Process : BIBJM004                       MEDICAID MANAGEMENT INFORMATION SYSTEM                 Run Time:  99:99:99
Location: BIB2004M                 BUY-IN PART B EXCEPTION ERROR BY TRANSACTION CODE REPORT     Page:          999
                                                   MM/DD/CCYY

          AGENCY CODES                                                          AGENCY  BILL    EFF                PREMIUM
TXN  SUB /DATE    PG ST MEDICAID ID HIC           LAST NAME    FIRST    MI  G  DOB     CODE    DATE    DATE    SSN        AMOUNT
XXXX  X   XXXXXX  XX XX XXXXXXXXXX  XXXXXXXXXXXX  XXXXXXXXXXXX XXXXXXX X   X  MMDDYY  XXX     MMYY    MMYY    XXXXXXXXX $9,999.99
XXXX  X   XXXXXX  XX XX XXXXXXXXXX  XXXXXXXXXXXX  XXXXXXXXXXXX XXXXXXX X   X  MMDDYY  XXX     MMYY    MMYY    XXXXXXXXX $9,999.99
XXXX  X   XXXXXX  XX XX XXXXXXXXXX  XXXXXXXXXXXX  XXXXXXXXXXXX XXXXXXX X   X  MMDDYY  XXX     MMYY    MMYY    XXXXXXXXX $9,999.99
          TOTAL TRANSACTIONS FOR CODE XXXX: 999,999          PREMIUM:     $99,999,999.99

XXXX  X   XXXXXX  XX XX XXXXXXXXXX XXXXXXXXXXXX  XXXXXXXXXXXX XXXXXXX X   X   MMDDYY  XXX     MMYY    MMYY    XXXXXXXXX $9,999.99
XXXX  X   XXXXXX  XX XX XXXXXXXXXX XXXXXXXXXXXX  XXXXXXXXXXXX XXXXXXX X   X   MMDDYY  XXX     MMYY    MMYY    XXXXXXXXX $9,999.99
          TOTAL TRANSACTIONS FOR CODE XXXX: 999,999          PREMIUM:     $99,999,999.99


                                   ***   END OF REPORT   ***


                                   ***   NO DATA THIS RUN   ***
```

3.8.10.4 Field Descriptions

Field	Description	Length	Data Type	DB Table	DB Attributes
Agency Code	This is the three-character code on the Buy-In Part B billing file that CMS has assigned each state. Refer to the State Buy-In manual for valid values	3	Character	T_BUYB_BILL	CDE_AGENCY
Agency/Date	This may contain the sub code effective date (MMYY) which is found right next to the sub code on the Buy-In Part B billing file. When clarifying an error code, this same field can instead have a three-character agency code for another state on the Buy-In Part B billing file.	4	Character	T_BUYB_BILL	MISC_CDE_DATE
Bill Date	This is the four-character numeric code that identifies the month and year (MMYY) the state is billed for a member's premiums as displayed on the Buy-In Part B billing file.	4	Number	T_BUYB_BILL	DTE_BILLING

Field	Description	Length	Data Type	DB Table	DB Attributes
Codes PG	This is the Buy-In program code.	2	Character	T_BUYB_BILL	CDE_BUY_SSI
Codes ST	This is the Buy-In status code.	2	Character	T_BUYB_BILL	CDE_BUY_ELIG
DOB	This is the member's date of birth (MMDDYY) or the new Medicare ID on the Buy-In Part B billing tape. This position may also contain an alphanumeric character for the last number in the date of birth if CMS shows a different DOB. This alphabetic character will be equal to the new number, for example 1=A, 2=B and so on.	6	Number	T_RE_BASE	DTE_BIRTH
Eff Date	This is the effective date of the transaction on which the member was accreted, deleted, or changed in Buy-In Part B as shown on the Buy-In Part B billing file.	4	Number	T_BUYB_BILL	DTE_EFFECTIVE
Elig Code	This is the one-character alphabetic code used to identify the specific category of assistance for each beneficiary enrolled in the Buy-in program. Valid values are: 'M', 'L', 'P', 'A' and 'U'.	1	Character	T_BUYB_BILL	CDE_BUY_ELIG
First	This is the member's first name on the Buy-In Part B billing file.	7	Character	T_RE_BASE	NAM_FIRST
HIC	This is the member's Medicare number on the Buy-In Part B billing file received from CMS monthly.	12	Character	T_BUYB_BILL	ID_MEDICARE
Last	This is the member's last name on the Buy-In Part B billing file.	12	Character	T_RE_BASE	NAM_LAST

Field	Description	Length	Data Type	DB Table	DB Attributes
Liv Arg	This is the one-position alphabetic code of "D" that indicates that the member is a resident of a Title XIX institution. This field is applicable to deletion records. This is also the last character of a new Medicare ID number.	1	Character	T_BUYB_BILL	CDE_BUY_LIV_ARNG
MI	This is the member's middle initial on the Buy-In Part B billing file.	1	Character	T_RE_BASE	NAM_MID_INIT
Medicaid ID	This is the member's 10-character numeric identification number on the Buy-In Part B billing file. This field may be all zeros or an invalid number sent by CMS.	10	Character	T_BUYB_BILL	ID_MEDICARE
Premium Amount	This is the premium amount billed by CMS to the State for a member's Buy-In Part B premiums.	9	Character	T_BUYB_BILL	AMT_PREMIUM
SSN	This is the member's Social Security number on the Buy-In Part B billing file.	9	Character	T_RE_BASE	NUM_SSN
Sub	This is the one-character code on the Buy-In Part B billing file that conveys additional information in conjunction with designated transaction codes. This field is applicable to a rejected accretion record, a duplicate accretion record or deletion record, or a State-submitted accretion record that matches a death deletion record. It will be blank in all other situations. Refer to the State Buy-In manual for valid values.	1	Character	T_BUYB_BILL	CDE_BUY_SUB

Field	Description	Length	Data Type	DB Table	DB Attributes
Txn	This is the Buy-In transaction code. The first two characters of a four-character code represent either a response to a transaction the State sent or a transaction initiated by CMS. The last two characters constitute the modifier code, which describes the State's requested action for that member (accretion, deletion, or change). Refer to the State Buy-In manual for the transaction codes. The second two characters on the transaction codes may be zeros or blank.	4	Character	T_BUYB_BILL	CDE_BUY_TXN

3.8.10.5 Associated Programs

Program	Description
bib2004m	Buy-In Part B Exception Error By Transaction Code
copy2routedir	Copy Reports to Router

3.8.10.6 Associated Requirements

ID
30.050.001A
30.090.001.001.2

3.8.10.7 Change Orders

ID	Name	Description
2259	Modify reports	There is a need to modify Buy-In reports.
467	Modify BIB-2004-M Report	There is a need to modify the BIB-2004-M report.

3.8.11 BIB-2010-M -- Buy-In Part B Expenditure Report

The Buy-In Part B Expenditure report is a monthly listing of Part B Buy-in premium amounts broken down into sub-program codes and account numbers, and then separated into the three fund categories of Federal Match, State Match, and State Only.

Selection criteria: Date of transaction creation is between the start and end dates passed as parameters throughout the command-line. If no dates are provided, date of transaction is between the first and the end day of the month for which the report is run.

3.8.11.1 Technical Name

BIB-2010-M

3.8.11.2 Sort Order

T_BUYB_BILL.SAK_RECIP, T_BUYB_BILL.SAK_BUYIN, T_PUB_HLTH_PGM.CDE_HLTH_PGM

3.8.11.3 Buy-In Part B Expenditure Report Layout

```
Report   : BIB-2010-M                    COMMONWEALTH OF KENTUCKY                    Run Date: MM/DD/CCYY
Process  : BIBJM010                  MEDICAID MANAGEMENT INFORMATION SYSTEM          Run Time:   99:99:99
Location: BIB2010M                     BUY-IN PART B EXPENDITURE REPORT              Page:          999
                                              MM/DD/CCYY
```

PCA CODE	FEDERAL MATCH	STATE MATCH	STATE ONLY	TOTAL
999999999	99,999,999.99	99,999,999.99	99,999,999.99	999,999,999.99
999999999	99,999,999.99	99,999,999.99	99,999,999.99	999,999,999.99
999999999	99,999,999.99	99,999,999.99	99,999,999.99	999,999,999.99
999999999	99,999,999.99	99,999,999.99	99,999,999.99	999,999,999.99
999999999	99,999,999.99	99,999,999.99	99,999,999.99	999,999,999.99
999999999	99,999,999.99	99,999,999.99	99,999,999.99	999,999,999.99
999999999	99,999,999.99	99,999,999.99	99,999,999.99	999,999,999.99
999999999	99,999,999.99	99,999,999.99	99,999,999.99	999,999,999.99

*** END OF REPORT ***

*** NO DATA THIS RUN ***

3.8.11.4 Field Descriptions

Field	Description	Length	Data Type	DB Table	DB Attributes
Federal Match	This is the amount of buy-in premium subject to federal matching funds.	13	Character	N/A	CALCULATED
PCA Code	This is the program cost accounting code against which the data is being accumulated.	9	Number	N/A	CALCULATED
State Match	This is the amount of buy-in premium subject to state funds.	13	Character	N/A	CALCULATED
State Only	This is the amount of buy-in premium for state only eligibility.	13	Character	N/A	CALCULATED
Total	This is the total of all amounts for all PCA codes.	13	Character	N/A	CALCULATED
Total of Federal Match	This is the total federal match amount.	13	Character	N/A	CALCULATED
Total of State Match	This is the total state match amount.	13	Character	N/A	CALCULATED
Total of State Only	This is the total state only amount.	13	Character	N/A	CALCULATED
Total(By PCA Code of the "Federal Match" , "State Match" and "State Only" amount)	This is the total of the following fields: "Federal Match" amount, "State Match" amount and "State Only" amount by PCA Code.	13	Character	N/A	CALCULATED

3.8.11.5 Associated Programs

Program	Description
bib2010m	Buy-In Part B Expenditure Report

Program	Description
copy2routedir	Copy Reports to Router

3.8.11.6 Associated Requirements

ID
30.050.001A
30.090.001.001.2

3.8.11.7 Change Orders

ID	Name	Description
3951	1010-M/2010-M date error	The date in the header is in the incorrect format. This bug applies to both reports (Buy-In Part A expenditures and Buyin Part B expenditures).
458	Use Standard Report Headings	There is a need to modify the standard Buy-In reports to use the Kentucky headings.

3.8.12 BIB-2011-M -- Buy-In Part B State Totals by Member Population

The Buy-In Part B State Totals by Member Population report provides a breakdown of the monthly Part B Buy-In premiums by member population, member count, and premium amount.

Selection criteria: Date of transaction creation is between the start and end dates passed as parameters through the command-line. If no dates are provided, date of transaction is between the first and the end day of the month for which the report is run.

3.8.12.1 Technical Name

BIB-2011-M

3.8.12.2 Buy-In Part B State Totals by Member Population Layout

```
Report  : BIB-2011-M                    COMMONWEALTH OF KENTUCKY                    Run Date: MM/DD/CCYY
Process : BIBJM011                  MEDICAID MANAGEMENT INFORMATION SYSTEM          Run Time:   99:99:99
Location: BIB2011M                BUY-IN PART B TOTALS BY POPULATION/STATUS REPORT  Page:          999
                                                MM/DD/CCYY

          POPULATION/STATUS                MEMBER COUNT                    PREMIUM AMOUNT
              XX/XX                          99,999,999                     99,999,999.99
              XX/XX                          99,999,999                     99,999,999.99
              XX/XX                          99,999,999                     99,999,999.99
              XX/XX                          99,999,999                     99,999,999.99
              XX/XX                          99,999,999                     99,999,999.99
              XX/XX                          99,999,999                     99,999,999.99

                                        *** END OF REPORT ***

                                      *** NO DATA THIS RUN ***
```

3.8.12.3 Field Descriptions

Field	Description	Length	Data Type	DB Table	DB Attributes
Member Count	This is the number of members in this program code.	10	Character	N/A	CALCULATED
Member Population	This is the program code to which the population is accumulated.	2	Character	N/A	CALCULATED
Member Status	This is the status code to which the population is accumulated.	2	Character	N/A	CALCULATED
Premium Amount	This is the total premium for this program code.	13	Character	N/A	CALCULATED

3.8.12.4 Associated Programs

Program	Description
tpl0021m	Buy-In Part B State Totals by Beneficiary Population
copy2routedir	Copy Reports to Router

3.8.12.5 Associated Requirements

ID
30.050.001A
30.090.001.001.2

3.8.12.6 Change Orders

ID	Name	Description
2259	Modify reports	There is a need to modify Buy-In reports.
468	Modify BIB-2011-M Report	There is a need to modify the BIB-2011-M report.

3.8.13 BIB-2013-M -- Buy-In Part B Premium Totals

The Buy-In Part B Premium Totals report identifies the Medicare Part B premium amount billed to the state by CMS for the current billing month. The billing month is the month following the month the billing file is received. This report reflects the amount billed and divides the amounts by the category of assistance which qualify for Part B Buy-in (QMB, QMB Dual, SLMB, SLMB Dual, Cash Assistance; and by ongoing billing, new accretions, and deletions. The Other category includes members who do not have a BID number on the billing file, or numbers which cannot be matched to a member. The category headers are: QMB, QMB Dual, SLMB, SLMB Dual, Cash (Cash Assistance), QI1, and MAO Other. The category header section contains the individual categories for which premiums are paid. They include QMB, QMB Dual, SLMB, SLMB Dual, CASH, MAO/Other and Total.

The purpose of the Buy-In Part B Premium Totals report is to reflect the amount CMS is billing the state by category for Medicare Part B premiums in the given billing month and to assist in the calculation of the amount to be paid to CMS for Medicare Part B Buy-In.

Selection criteria: Date of transaction creation is between the start and end dates passed as parameters throughout the command-line. If no dates are provided, date of transaction is between the first and the end day of the month for which the report is run.

3.8.13.1 Technical Name
BIB-2013-M

3.8.13.2 Sort Order
N/A – Totals Only

For readabilitythe layout displays on the next page.

3.8.13.3 Buy-In Part B Premium Totals Layout

```
Report  : BIB-2013-M                          COMMONWEALTH OF KENTUCKY                          Run Date: MM/DD/CCYY
Process : BIBJM013                       MEDICAID MANAGEMENT INFORMATION SYSTEM                 Run Time:   99:99:99
Location: BIB2013M                         BUY-IN PART B PREMIUM TOTALS REPORT                  Page:           999
                                                  MM/DD/CCYY

                    ONGOING BILLING            NEW ACCRETIONS                DELETIONS                TOTAL BILLING
CATEGORY         QTY            AMT        QTY            AMT        QTY            AMT          QTY              AMT
  QMB          99,999  $99,999,999.99    99,999  $99,999,999.99    99,999  $99,999,999.99      999,999   $999,999,999.99
  QMB DUAL     99,999  $99,999,999.99    99,999  $99,999,999.99    99,999  $99,999,999.99      999,999   $999,999,999.99
  SLMB         99,999  $99,999,999.99    99,999  $99,999,999.99    99,999  $99,999,999.99      999,999   $999,999,999.99
  SLMB DUAL    99,999  $99,999,999.99    99,999  $99,999,999.99    99,999  $99,999,999.99      999,999   $999,999,999.99
  QI1          99,999  $99,999,999.99    99,999  $99,999,999.99    99,999  $99,999,999.99      999,999   $999,999,999.99
  QI2          99,999  $99,999,999.99    99,999  $99,999,999.99    99,999  $99,999,999.99      999,999   $999,999,999.99
  MAO/OTHER    99,999  $99,999,999.99    99,999  $99,999,999.99    99,999  $99,999,999.99      999,999   $999,999,999.99

TOTALS        999,999 $999,999,999.99   999,999 $999,999,999.99   999,999 $999,999,999.99    9,999,999 $9,999,999,999.99

CURRENT MONTHS BILLED:                 99,999,999.99
PAST MONTHS BILLED:                    99,999,999.99
TOTAL CREDIT:                          99,999,999.99

                                   *** END OF REPORT ***

                                  *** NO DATA THIS RUN ***
```

3.8.13.4 Field Descriptions

Field	Description	Length	Data Type	DB Table	DB Attributes
Current Months Billed	This is the dollar amount of all transactions on the billing file for the current month, including all code 41bb transactions. In addition, codes 11XX and 17XX have a one month premium (included in Current Months Billed) and may also have past month premiums (included in Past Months Billed).	13	Character	N/A	CALCULATED

Field	Description	Length	Data Type	DB Table	DB Attributes
MAO/Other	This is the total premiums for beneficiaries on the billing file who do not have a BID number or whose number does not have a match in the Eligibility panel.	13	Character	N/A	CALCULATED
Past Months Billed	This is the dollar amount of all transactions on the billing file for the past months. To determine this number, the system identifies transactions with codes 11XX and 17XX. If the effective date of those transactions is the current billing month, it is added to Current Months Billed. If the effective date is less than the current billing month, one month is added to Current Months Billed and the rest of the months are added to Past Months Billed. The same calculation applies to the two transaction code pairs 1172/1772 and 1175/1776.	13	Character	N/A	CALCULATED
QI1	This is the total premiums for QI1 beneficiaries.	13	Character	N/A	CALCULATED
QI2	This is the total premiums for members who are in the state and receive all or part of their income as cash assistance members.	13	Character	N/A	CALCULATED
QMB	This is the total premiums for qualified Medicare beneficiaries.	13	Character	N/A	CALCULATED
QMB Dual	This is the total premiums for qualified Medicare beneficiaries with dual eligibility.	13	Character	N/A	CALCULATED
SLMB	This is the total premiums for specified low income Medicare beneficiaries.	13	Character	N/A	CALCULATED
SLMB Dual	This is the total premiums for specified low income Medicare beneficiaries with dual eligibility.	13	Character	N/A	CALCULATED

Field	Description	Length	Data Type	DB Table	DB Attributes
Total	This is the total of all the above categories, depending upon the reported transaction codes.	13	Character	N/A	CALCULATED
Total Billing	This is the balance of the totals of ongoing billing plus the new accretions, minus the deletions for each program.	13	Character	N/A	CALCULATED
Total Credit	This is the dollar amount for which a credit was received by the state. This includes all the 42bb and 42XX transaction codes. The whole dollar amount, with or without an effective date, is added to this field.	13	Character	N/A	CALCULATED

3.8.13.5 Associated Programs

Program	Description
bib2013m	Buy-In Part B Premium Totals
copy2routedir	Copy Reports to Router

3.8.13.6 Associated Requirements

ID
30.050.001A
30.090.001.001.2

3.8.13.7 Change Orders

ID	Name	Description
469	Modify BIB-2013-M Report	There is a need to modify the BIB-2013-M report.

3.8.14 BUY-3001-M -- Possible Medicare Eligible's

The purpose of the Possible Medicare Eligible's report is to identify those individuals who either had crossover claims paid by Medicare or ESRD-related claims, but do not show Medicare A or B in the member data base. The Possible Medicare Eligible's report reads the member paid crossover claim files. If a member has a crossover claim that paid or an ESRD-related claim, the Medicare table in eligibility is checked to see if the member has Medicare A or Medicare B. The members who do not have Medicare A or B show up on this report.

Selection criteria: If no parameter is passed in the command line, the date the claim was paid must be between the first day and the end day of the month for which the report is run. Otherwise, the date the claim was paid must be between the two optional dates passed in command line parameter.

Sort criteria: Potential ESRD, SSN.

3.8.14.1 Technical Name

BUY-3001-M

3.8.14.2 Sort Order

SSN

3.8.14.3 Possible Medicare Eligible's Layout

```
Report   : BUY-3001-M                    COMMONWEALTH OF KENTUCKY                    Run Date: MM/DD/CCYY
Process  : BUYJM001                  MEDICAID MANAGEMENT INFORMATION SYSTEM          Run Time:   99:99:99
Location: BUY3001M                 BUY-IN POSSIBLE MEDICARE ELIGIBLES REPORT         Page:          999
                                              MM/DD/CCYY

POTENTIAL
  ESRD     SSN         LAST NAME              FIRST NAME       MI   MEDICARE ID    BIRST DATE   MEDICAID ID
   Y       XXXXXXXXX   XXXXXXXXXXXXXXXXXXXX   XXXXXXXXXXXXXXXX X    XXXXXXXXXXXX   MM/DD/CCYY   XXXXXXXXXXXX
   Y       XXXXXXXXX   XXXXXXXXXXXXXXXXXXXX   XXXXXXXXXXXXXXXX X    XXXXXXXXXXXX   MM/DD/CCYY   XXXXXXXXXXXX
   Y       XXXXXXXXX   XXXXXXXXXXXXXXXXXXXX   XXXXXXXXXXXXXXXX X    XXXXXXXXXXXX   MM/DD/CCYY   XXXXXXXXXXXX
   Y       XXXXXXXXX   XXXXXXXXXXXXXXXXXXXX   XXXXXXXXXXXXXXXX X    XXXXXXXXXXXX   MM/DD/CCYY   XXXXXXXXXXXX
   Y       XXXXXXXXX   XXXXXXXXXXXXXXXXXXXX   XXXXXXXXXXXXXXXX X    XXXXXXXXXXXX   MM/DD/CCYY   XXXXXXXXXXXX
   Y       XXXXXXXXX   XXXXXXXXXXXXXXXXXXXX   XXXXXXXXXXXXXXXX X    XXXXXXXXXXXX   MM/DD/CCYY   XXXXXXXXXXXX
   Y       XXXXXXXXX   XXXXXXXXXXXXXXXXXXXX   XXXXXXXXXXXXXXXX X    XXXXXXXXXXXX   MM/DD/CCYY   XXXXXXXXXXXX

                                        *** END OF REPORT ***

                                      *** NO DATA THIS RUN ***
```

3.8.14.4 Field Descriptions

Field	Description	Length	Data Type	DB Table	DB Attributes
Birth	This is the member's date of birth (MMDDYY format) in the Member database.	6	Number	T_RE_BASE	DTE_BIRTH
First	This is the member's first name in the Member database.	7	Character	T_RE_BASE	NAM_FIRST
Last	This is the member's last name in the Member database.	12	Character	T_RE_BASE	NAM_LAST
MI	This is the member's middle initial in the Member database.	1	Character	T_RE_BASE	NAM_MID_INIT
Medicaid ID	This is the member's 11-character numeric identification number from the adjudicated claim.	11	Character	T_RE_HIB	ID_MEDICARE
Medicare ID	This is the member's Medicare number from the adjudicated claim.	12	Character	T_RE_HIB	ID_MEDICARE
Potential ESRD	A 'Y' indicates the member has had a potential ESRD procedure. Otherwise, this field will contain a blank space.	1	Character	N/A	CALCULATED
SSN	This is the member's Social Security number in the Member database.	9	Character	T_RE_BASE	NUM_SSN

3.8.14.5 Associated Programs

Program	Description
buy3001m	Print Possible Medicare Eligible's report

Program	Description
copy2routedir	Copy Reports to Router
buypm606	Buy-In Transaction 23 filter program

3.8.14.6 Associated Requirements

ID
30.090.001.001.2

3.8.14.7 Change Orders

ID	Name	Description
3946	3001-M columns, date	Alignment of column headings needs fixed as well as the date in the report header.
458	Use Standard Report Headings	There is a need to modify the standard Buy-In reports to use the Kentucky headings.

3.8.15 BUY-4001-M -- Buy-In Billing Process Error

The Buy-In Billing Process Error report is a Commonwealth-specific report.

This report lists all transactions on the Buy-In billing file with non-fatal errors that do not prevent posting to the Buy-In Master. Error messages are provided to assist in correcting the errors.

3.8.15.1 Technical Name

BUY-4001-M

3.8.15.2 Sort Order

3.8.15.3 Buy-In Billing Process Error Layout

```
Report  : BUY-4001-M                          COMMONWEALTH OF KENTUCKY                          Run Date: MM/DD/CCYY
Process : BUYJM401                       MEDICAID MANAGEMENT INFORMATION SYSTEM                 Run Time:   99:99:99
Location: BUYPM401                            BILLING PROCESS ERROR REPORT                      Page:          999
                                                   MM/DD/CCYY

  HIC           SSN        MEDICAID ID  EFF DATE  END DATE   TRAN/SUB      AMOUNT  RIC  COMMENT
  XXXXXXXXXXXX  XXXXXXXXX  XXXXXXXXXX    CCYYMM    CCYYMM     XXXX X   999,999.99   X   XXXXXXXXXXXXXXXXXXXXXXXXXXXXXXXXXXXXXXXX
  XXXXXXXXXXXX  XXXXXXXXX  XXXXXXXXXX    CCYYMM    CCYYMM     XXXX X   999,999.99   X   XXXXXXXXXXXXXXXXXXXXXXXXXXXXXXXXXXXXXXXX
  XXXXXXXXXXXX  XXXXXXXXX  XXXXXXXXXX    CCYYMM    CCYYMM     XXXX X   999,999.99   X   XXXXXXXXXXXXXXXXXXXXXXXXXXXXXXXXXXXXXXXX
  XXXXXXXXXXXX  XXXXXXXXX  XXXXXXXXXX    CCYYMM    CCYYMM     XXXX X   999,999.99   X   XXXXXXXXXXXXXXXXXXXXXXXXXXXXXXXXXXXXXXXX
  XXXXXXXXXXXX  XXXXXXXXX  XXXXXXXXXX    CCYYMM    CCYYMM     XXXX X   999,999.99   X   XXXXXXXXXXXXXXXXXXXXXXXXXXXXXXXXXXXXXXXX
  XXXXXXXXXXXX  XXXXXXXXX  XXXXXXXXXX    CCYYMM    CCYYMM     XXXX X   999,999.99   X   XXXXXXXXXXXXXXXXXXXXXXXXXXXXXXXXXXXXXXXX
  XXXXXXXXXXXX  XXXXXXXXX  XXXXXXXXXX    CCYYMM    CCYYMM     XXXX X   999,999.99   X   XXXXXXXXXXXXXXXXXXXXXXXXXXXXXXXXXXXXXXXX

                                   ***   END OF REPORT   ***

                                   ***   NO DATA THIS RUN   ***
```

3.8.15.4 Field Descriptions

Field	Description	Length	Data Type	DB Table	DB Attributes
Amount	Premium amount.	8	Number	T_BUYA_BILL/T_BUYB_BILL	AMT_PREMIUM
Comment	Error message.	40	Character		CALCULATED
Eff Date	Buy-In effective date.	6	Number	T_BUYA_BILL/T_BUYB_BILL	DTE_EFFECTIVE
End Date	Buy-In end date.	6	Number	T_BUYA_BILL/T_BUYB_BILL	DTE_STOP
HIC	Member Medicare identification number.	12	Character	T_BUYA_BILL/T_BUYB_BILL	ID_MEDICARE
Medicaid ID	Member identification number (Medicaid ID).	9	Number	T_RE_BASE	ID_MEDICAID
RIC	Record identification code.	1	Character	T_BUYA_BILL/T_BUYB_BILL	CDE_RIC
SSN	Member Social Security number.	9	Number	T_RE_BASE	NUM_SSN
Trans / Sub	Transaction and sub codes.	6	Character	T_BUYA_BILL/T_BUYB_BILL	CDE_BUY_TXN

3.8.15.5 Associated Programs

Program	Description
buypm401	Billing Process Error Report

Program	Description
copy2crld	CRLD copy

3.8.15.6 Associated Requirements

ID
30.090.001.001.2

3.8.15.7 Change Orders

ID	Name	Description
2259	Modify reports	There is a need to modify Buy-In reports.
3947	4001-M column hdr, date	Column header and report header (date) needs corrected.
476	Billing Process Error Report	There is a need to duplicate the KYMQ1200-R001 report.

3.8.16 BUY-4003-M -- Buy-In Original ID Change

The Buy-In Original ID Change report is a Commonwealth-specific report.

This report lists original ID change requests. Original ID (HIC) change requests are received from CMS via a special transaction. These transactions are the first processed during receipt of the Part A and Part B billing files. The standard matching criteria for Buy-In are used to locate the member, and the new HIC number applied. This reduces the chances of a mismatch in the event another billing record exists for the same member within the billing file.

3.8.16.1 Technical Name

BUY-4003-M

3.8.16.2 Sort Order

3.8.16.3 Buy-In Original ID Change Layout

```
Report  : BUY-4003-M                    COMMONWEALTH OF KENTUCKY                    Run Date: MM/DD/CCYY
Process : BUYJM403                 MEDICAID MANAGEMENT INFORMATION SYSTEM           Run Time:   99:99:99
Location: BUYPM403                  ORIGINAL ID UPDATES REQUESTED REPORT            Page:            999
                                              MM/DD/CCYY

HIC            LAST NAME       FIRST NAME    MI  GENDER   DOB        SSN      AGENCY  CMS ORIG ID   DMS ORIG ID
XXXXXXXXXXXX   XXXXXXXXXXXXXXX XXXXXXXXXXXXX X     X    MMDDCCYY   999999999  XXX    XXXXXXXXXXXX  XXXXXXXXXXXX
XXXXXXXXXXXX   XXXXXXXXXXXXXXX XXXXXXXXXXXXX X     X    MMDDCCYY   999999999  XXX    XXXXXXXXXXXX  XXXXXXXXXXXX
XXXXXXXXXXXX   XXXXXXXXXXXXXXX XXXXXXXXXXXXX X     X    MMDDCCYY   999999999  XXX    XXXXXXXXXXXX  XXXXXXXXXXXX
XXXXXXXXXXXX   XXXXXXXXXXXXXXX XXXXXXXXXXXXX X     X    MMDDCCYY   999999999  XXX    XXXXXXXXXXXX  XXXXXXXXXXXX
XXXXXXXXXXXX   XXXXXXXXXXXXXXX XXXXXXXXXXXXX X     X    MMDDCCYY   999999999  XXX    XXXXXXXXXXXX  XXXXXXXXXXXX
XXXXXXXXXXXX   XXXXXXXXXXXXXXX XXXXXXXXXXXXX X     X    MMDDCCYY   999999999  XXX    XXXXXXXXXXXX  XXXXXXXXXXXX
XXXXXXXXXXXX   XXXXXXXXXXXXXXX XXXXXXXXXXXXX X     X    MMDDCCYY   999999999  XXX    XXXXXXXXXXXX  XXXXXXXXXXXX
XXXXXXXXXXXX   XXXXXXXXXXXXXXX XXXXXXXXXXXXX X     X    MMDDCCYY   999999999  XXX    XXXXXXXXXXXX  XXXXXXXXXXXX
XXXXXXXXXXXX   XXXXXXXXXXXXXXX XXXXXXXXXXXXX X     X    MMDDCCYY   999999999  XXX    XXXXXXXXXXXX  XXXXXXXXXXXX

                                   ***   END OF REPORT   ***

                                   ***   NO DATA THIS RUN   ***
```

3.8.16.4 Field Descriptions

Field	Description	Length	Data Type	DB Table	DB Attributes
Agency	Buy-In billing agency.	3	Character	T_BUYA_BILL/T_BUYB_BILL	CDE_AGENCY
CMS Orig ID	Original ID on Buy-In billing record.	12	Number	T_BUYA_BILL/T_BUYB_BILL	ID_MEDICARE_NEW
DMS Orig ID	Original ID on Buy-In master file.	12	Number	T_RE_BASE	ID_MEDICARE
First Name	Member first name.	13	Character	T_RE_BASE	NAM_FIRST
HIC	Member HIC ID.	12	Character	T_RE_BASE	ID_MEDICARE
Last Name	Member last name.	15	Character	T_RE_BASE	NAM_LAST
MI	Member middle initial.	1	Character	T_RE_BASE	NAM_MID_INIT
SSN	Social Security number of member.	9	Number	T_RE_BASE	NUM_SSN
Sex	Sex of member.	1	Character	T_RE_BASE	CDE_SEX

3.8.16.5 Associated Programs

Program	Description
buypm403	Original ID Change Report
copy2crld	CRLD copy

3.8.16.6 Associated Requirements

ID
30.090.001.001.2

3.8.16.7 Change Orders

ID	Name	Description
478	Original ID Change Report	There is a need to duplicate the KYMQ1203-R001 report.

3.8.17 BUY-4004-M -- Buy-In Death

The Buy-In Death is a Commonwealth-specific report.

This report lists information about Buy-In transactions 16, 29XX, and 4216. Members who receive a Part A or Part B billing record with a non-zero date of death are presumed to be deceased by CMS. This report lists those members who have been flagged by CMS as deceased.

3.8.17.1 Technical Name

BUY-4004-M

3.8.17.2 Buy-In Death Layout

```
Report  : BUY-4004-M                    COMMONWEALTH OF KENTUCKY                    Run Date: MM/DD/CCYY
Process : BUYJM404                MEDICAID MANAGEMENT INFORMATION SYSTEM            Run Time:   99:99:99
Location: BUYPM404                         BUY-IN DEATH REPORT                      Page:          999
                                              MM/DD/CCYY

 DEATH REPORT - PART A
  MEDICAID ID  HIC           LAST NAME       FIRST NAME    MI  TRANS CODE  SUB  EFF DATE    END DATE   BUY-IN DOD  IC DOD     RIC
  XXXXXXXXXX   XXXXXXXXXXXX  XXXXXXXXXXXXXXX XXXXXXXXXXXXXX X      XXXX      X   MM/DD/CCYY MM/DD/CCYY MM/CCYY    MM/DD/CCYY  X
  XXXXXXXXXX   XXXXXXXXXXXX  XXXXXXXXXXXXXXX XXXXXXXXXXXXXX X      XXXX      X   MM/DD/CCYY MM/DD/CCYY MM/CCYY    MM/DD/CCYY  X
  XXXXXXXXXX   XXXXXXXXXXXX  XXXXXXXXXXXXXXX XXXXXXXXXXXXXX X      XXXX      X   MM/DD/CCYY MM/DD/CCYY MM/CCYY    MM/DD/CCYY  X
  XXXXXXXXXX   XXXXXXXXXXXX  XXXXXXXXXXXXXXX XXXXXXXXXXXXXX X      XXXX      X   MM/DD/CCYY MM/DD/CCYY MM/CCYY    MM/DD/CCYY  X
  XXXXXXXXXX   XXXXXXXXXXXX  XXXXXXXXXXXXXXX XXXXXXXXXXXXXX X      XXXX      X   MM/DD/CCYY MM/DD/CCYY MM/CCYY    MM/DD/CCYY  X
  XXXXXXXXXX   XXXXXXXXXXXX  XXXXXXXXXXXXXXX XXXXXXXXXXXXXX X      XXXX      X   MM/DD/CCYY MM/DD/CCYY MM/CCYY    MM/DD/CCYY  X
  XXXXXXXXXX   XXXXXXXXXXXX  XXXXXXXXXXXXXXX XXXXXXXXXXXXXX X      XXXX      X   MM/DD/CCYY MM/DD/CCYY MM/CCYY    MM/DD/CCYY  X
 DEATH REPORT - PART B
  MEDICAID ID  HIC           LAST NAME       FIRST NAME    MI  TRANS CODE  SUB  EFF DATE    END DATE   BUY-IN DOD  IC DOC     RIC
  XXXXXXXXXX   XXXXXXXXXXXX  XXXXXXXXXXXXXXX XXXXXXXXXXXXXX X      XXXX      X   MM/DD/CCYY MM/DD/CCYY MM/CCYY    MM/DD/CCYY  X
  XXXXXXXXXX   XXXXXXXXXXXX  XXXXXXXXXXXXXXX XXXXXXXXXXXXXX X      XXXX      X   MM/DD/CCYY MM/DD/CCYY MM/CCYY    MM/DD/CCYY  X
  XXXXXXXXXX   XXXXXXXXXXXX  XXXXXXXXXXXXXXX XXXXXXXXXXXXXX X      XXXX      X   MM/DD/CCYY MM/DD/CCYY MM/CCYY    MM/DD/CCYY  X
  XXXXXXXXXX   XXXXXXXXXXXX  XXXXXXXXXXXXXXX XXXXXXXXXXXXXX X      XXXX      X   MM/DD/CCYY MM/DD/CCYY MM/CCYY    MM/DD/CCYY  X
  XXXXXXXXXX   XXXXXXXXXXXX  XXXXXXXXXXXXXXX XXXXXXXXXXXXXX X      XXXX      X   MM/DD/CCYY MM/DD/CCYY MM/CCYY    MM/DD/CCYY  X
  XXXXXXXXXX   XXXXXXXXXXXX  XXXXXXXXXXXXXXX XXXXXXXXXXXXXX X      XXXX      X   MM/DD/CCYY MM/DD/CCYY MM/CCYY    MM/DD/CCYY  X
  XXXXXXXXXX   XXXXXXXXXXXX  XXXXXXXXXXXXXXX XXXXXXXXXXXXXX X      XXXX      X   MM/DD/CCYY MM/DD/CCYY MM/CCYY    MM/DD/CCYY  X

                                   ***   END OF REPORT   ***

                                  ***   NO DATA THIS RUN   ***
```

3.8.17.3 Field Descriptions

Field	Description	Length	Data Type	DB Table	DB Attributes
Buy-In DOD	Buy-In transaction date of death.	8	Date (MM/DD/CCYY)	T_RE_BASE	DTE_EFFECTIVE
Eff Date	Buy-In transaction effective date.	8	Date (MM/DD/CCYY)	T_BUYA_BILL/T_BUYB_BILL	DTE_EFFECTIVE
End Date	Buy-In transaction end date.	8	Date (MM/DD/CCYY)	T_BUYA_BILL/T_BUYB_BILL	DTE_END
First Name	Member's first name.	13	Character	T_RE_BASE	NAM_FIRST
HIC	Member HIC.	12	Character	T_RE_BASE	ID_MEDICARE
IC DOD	interChange date of death.	8	Date (MM/DD/CCYY)	T_RE_BASE	DTE_DEATH
Last Name	Member's last name.	15	Character	T_RE_BASE	NAM_LAST
MI	Member's middle initial.	1	Character	T_RE_BASE	NAM_MID_INIT
Medicaid ID	Member identification number (Medicaid ID).	10	Character	T_RE_BASE	ID_MEDICAID
Part	Report title - Part A, B.	1	Character		CALCULATED
RIC	Record ID code received from CMS.	1	Character	T_BUYA_BILL/T_BUYB_BILL	CDE_RIC
Sub Code	Buy-In sub code.	4	Character	T_BUYA_BILL/T_BUYB_BILL	CDE_BUY_SUB
Trans Code	Buy-In transaction code.	4	Character	T_BUYA_BILL/T_BUYB_BILL	CDE_BUY_TXN

3.8.17.4 Associated Programs

Program	Description
copy2crld	CRLD copy
buypm404	Buy-In Death Report

3.8.17.5 Associated Requirements

ID
30.090.001.001.2

3.8.17.6 Change Orders

ID	Name	Description
479	Buy-In Death Report	There is a need to duplicate the KYMQ1205-R002 report.

3.8.18 BUY-4005-M -- Buy-In Accrete

The Buy-In Accrete report is a Commonwealth-specific report.

This report lists members who have been retroactively accreted by CMS for either Part A or Part B. Buy-In transactions 1161, 1165, 1167, 1175, 1180, 1184, 4361, 4375, 4380, and 4384 with an effective date earlier than the current billing month are located and formatted into this report.

3.8.18.1 Technical Name

BUY-4005-M

3.8.18.2 Buy-In Accrete Layout

```
Report  : BUY-4005-M                          COMMONWEALTH OF KENTUCKY                          Run Date: MM/DD/CCYY
Process : BUYJM405                      MEDICAID MANAGEMENT INFORMATION SYSTEM                  Run Time:   99:99:99
Location: BUYPM405                           RETROACTIVE ACRRETION REPORT                       Page:          999
                                                   MM/DD/CCYY

  PART A ACCRETIONS
       MEDICAID ID   HIC           LAST NAME       FIRST NAME    MI  TRAN CODE  SUB CODE   EFF DATE    END DATE
       XXXXXXXXXX    XXXXXXXXXXXX  XXXXXXXXXXXXXXX XXXXXXXXXXXXXX X     XXXX       XXXX    MM/DD/CCYY  MM/DD/CCYY
       XXXXXXXXXX    XXXXXXXXXXXX  XXXXXXXXXXXXXXX XXXXXXXXXXXXXX X     XXXX       XXXX    MM/DD/CCYY  MM/DD/CCYY
       XXXXXXXXXX    XXXXXXXXXXXX  XXXXXXXXXXXXXXX XXXXXXXXXXXXXX X     XXXX       XXXX    MM/DD/CCYY  MM/DD/CCYY
       XXXXXXXXXX    XXXXXXXXXXXX  XXXXXXXXXXXXXXX XXXXXXXXXXXXXX X     XXXX       XXXX    MM/DD/CCYY  MM/DD/CCYY
       XXXXXXXXXX    XXXXXXXXXXXX  XXXXXXXXXXXXXXX XXXXXXXXXXXXXX X     XXXX       XXXX    MM/DD/CCYY  MM/DD/CCYY
       XXXXXXXXXX    XXXXXXXXXXXX  XXXXXXXXXXXXXXX XXXXXXXXXXXXXX X     XXXX       XXXX    MM/DD/CCYY  MM/DD/CCYY

  PART B ACCRETIONS
       MEDICAID ID   HIC           LAST NAME       FIRST NAME    MI  TRAN CODE  SUB CODE   EFF DATE    END DATE
       XXXXXXXXXX    XXXXXXXXXXXX  XXXXXXXXXXXXXXX XXXXXXXXXXXXXX X     XXXX       XXXX    MM/DD/CCYY  MM/DD/CCYY
       XXXXXXXXXX    XXXXXXXXXXXX  XXXXXXXXXXXXXXX XXXXXXXXXXXXXX X     XXXX       XXXX    MM/DD/CCYY  MM/DD/CCYY
       XXXXXXXXXX    XXXXXXXXXXXX  XXXXXXXXXXXXXXX XXXXXXXXXXXXXX X     XXXX       XXXX    MM/DD/CCYY  MM/DD/CCYY
       XXXXXXXXXX    XXXXXXXXXXXX  XXXXXXXXXXXXXXX XXXXXXXXXXXXXX X     XXXX       XXXX    MM/DD/CCYY  MM/DD/CCYY
       XXXXXXXXXX    XXXXXXXXXXXX  XXXXXXXXXXXXXXX XXXXXXXXXXXXXX X     XXXX       XXXX    MM/DD/CCYY  MM/DD/CCYY
       XXXXXXXXXX    XXXXXXXXXXXX  XXXXXXXXXXXXXXX XXXXXXXXXXXXXX X     XXXX       XXXX    MM/DD/CCYY  MM/DD/CCYY

                                        ***   END OF REPORT   ***

                                        ***   NO DATA THIS RUN   ***
```

3.8.18.3 Field Descriptions

Field	Description	Length	Data Type	DB Table	DB Attributes
Eff Date	Buy-In transaction effective date.	8	Date (MM/DD/CCYY)	T_BUYA_BILL/T_BUYB_BILL	DTE_EFFECTIVE
End Date	Buy-In transaction end date.	8	Date (MM/DD/CCYY)	T_BUYA_BILL/T_BUYB_BILL	DTE_END
First Name	Member's first name.	13	Character	T_RE_BASE	NAM_FIRST
HIC	Member HIC.	12	Character	T_RE_BASE	ID_MEDICARE
Last Name	Member's last name.	15	Character	T_RE_BASE	NAM_LAST
MI	Member's middle initial.	1	Character	T_RE_BASE	NAM_MID_INIT
Medicaid ID	Member identification number (Medicaid ID).	10	Character	T_RE_BASE	ID_MEDICAID
Part Accretions	Report ID part.	1	Character	N/A	CALCULATED
Sub Code	Buy-In sub code.	4	Character	T_BUYA_BILL/T_BUYB_BILL	CDE_BUY_SUB
Tran Code	Buy-In transaction code.	4	Character	T_BUYA_BILL/T_BUYB_BILL	CDE_BUY_TXN

3.8.18.4 Associated Programs

Program	Description
buypm405	Buy-In Accrete Report
copy2crld	CRLD copy

3.8.18.5 Associated Requirements

ID
30.090.001.001.2

3.8.18.6 Change Orders

ID	Name	Description
4023	4005-M column headings	Column headings do not appear on subsequent pages.
480	Retroactive Buyin Accrete Report	There is a need to duplicate the KYMQ1205-R005 report.

3.8.19 BUY-4006-M -- Buy-In Transaction To CMS Summary

The Buy-In Transaction To CMS Summary is a Commonwealth-specific report.

This report displays counts of Buy-In transactions sent to CMS. It is a summary of each transaction code plus the number of transactions sent for that code. The report is sorted by Part A then Part B, with the transaction code as an additional sort.

3.8.19.1 Technical Name

BUY-4006-M

3.8.19.2 Buy-In Transaction To CMS Summary Layout

```
Report  : BUY-4006-M                    COMMONWEALTH OF KENTUCKY                    Run Date: MM/DD/CCYY
Process : BUYJM406                  MEDICAID MANAGEMENT INFORMATION SYSTEM          Run Time:   99:99:99
Location: BUYPM406                    TRANSACTION TO CMS SUMMARY REPORT             Page:            999
                                                MM/DD/CCYY

                                      PART A    TXN CODE  WRITTEN
                                                   XX     999,999
                                                   XX     999,999
                                                   XX     999,999
                                                   XX     999,999
                                                   XX     999,999
                                                   XX     999,999

                                      PART B    TXN CODE  WRITTEN
                                                   XX     999,999
                                                   XX     999,999
                                                   XX     999,999
                                                   XX     999,999
                                                   XX     999,999
                                                   XX     999,999


                                       ***   END OF REPORT   ***

                                      ***   NO DATA THIS RUN   ***
```

3.8.19.3 Field Descriptions

Field	Description	Length	Data Type	DB Table	DB Attributes
Part	Medicare entitlement part for which transactions were created.	1	Character	N/A	CALCULATED
TXN Code	Transaction code created.	2	Character	N/A	CALCULATED
Written	Number of transactions created.	6	Number	N/A	CALCULATED

3.8.19.4 Associated Programs

Program	Description
copy2crld	CRLD copy
buypm406	Transaction to CMS Summary Report

3.8.19.5 Associated Requirements

ID
30.090.001.001.2

3.8.19.6 Change Orders

ID	Name	Description
481	Transaction to CMS Summary Rpt	There is a need to duplicate the KYMQ2000-R001 report.

3.8.20 BUY-4007-M -- Buy-In Manual Transactions Submitted

The Buy-In Manual Transactions Submitted report is a Commonwealth-specific report.

In the Buy-In system, users may enter new transactions or modify unposted transactions manually. This allows the Commonwealth to make manual changes to reconcile billing, accretions, deletions and other Buy-In functions. These transactions are flagged internally for auditing purposes. This report lists the manual Buy-In transactions that are submitted to CMS.

3.8.20.1 Technical Name

BUY-4007-M

For readabilitythe layout displays on the next page.

3.8.20.2 Buy-In Manual Transactions Submitted Layout

```
Report  : BUY-4007-M                          COMMONWEALTH OF KENTUCKY                                  Run Date: MM/DD/CCYY
Process : BUYJM407                      MEDICAID MANAGEMENT INFORMATION SYSTEM                          Run Time:   99:99:99
Location: BUYPM407                    MANUAL BUY-IN TRANSACTIONS SUBMITTED REPORT                       Page:            999
                                                    MM/DD/CCYY

PART A
                                                                  TRAN                                   ---- CURRENT BUY-IN -----
ORIG ID   MEDICAID ID HIC          LAST NAME       FIRST NAME    MI CODE EFF DATE   END DATE   NEW MAID   TRAN EFF DATE   END DATE
999999999 9999999999  XXXXXXXXXXXX XXXXXXXXXXXXXXX XXXXXXXXXXXXX X  XXXX MM/DD/CCYY MM/DD/CCYY XXXXXXXXXX XXXX MM/DD/CCYY MM/DD/CCYY
                                                                  XXXX MM/DD/CCYY MM/DD/CCYY XXXXXXXXXX XXXX MM/DD/CCYY MM/DD/CCYY

999999999 9999999999  XXXXXXXXXXXX XXXXXXXXXXXXXXX XXXXXXXXXXXXX X  XXXX MM/DD/CCYY MM/DD/CCYY XXXXXXXXXX XXXX MM/DD/CCYY MM/DD/CCYY

999999999 9999999999  XXXXXXXXXXXX XXXXXXXXXXXXXXX XXXXXXXXXXXXX X  XXXX MM/DD/CCYY MM/DD/CCYY XXXXXXXXXX XXXX MM/DD/CCYY MM/DD/CCYY
                                                                  XXXX MM/DD/CCYY MM/DD/CCYY XXXXXXXXXX XXXX MM/DD/CCYY MM/DD/CCYY
                                                                  XXXX MM/DD/CCYY MM/DD/CCYY XXXXXXXXXX XXXX MM/DD/CCYY MM/DD/CCYY
                                                                  XXXX MM/DD/CCYY MM/DD/CCYY XXXXXXXXXX XXXX MM/DD/CCYY MM/DD/CCYY


PART B
                                                                  TRAN                                   ---- CURRENT BUY-IN -----
ORIG ID   MEDICAID ID HIC          LAST NAME       FIRST NAME    MI CODE EFF DATE   END DATE   NEW MAID   TRAN EFF DATE   END DATE
999999999 9999999999  XXXXXXXXXXXX XXXXXXXXXXXXXXX XXXXXXXXXXXXX X  XXXX MM/DD/CCYY MM/DD/CCYY XXXXXXXXXX XXXX MM/DD/CCYY MM/DD/CCYY
                                                                  XXXX MM/DD/CCYY MM/DD/CCYY XXXXXXXXXX XXXX MM/DD/CCYY MM/DD/CCYY

999999999 9999999999  XXXXXXXXXXXX XXXXXXXXXXXXXXX XXXXXXXXXXXXX X  XXXX MM/DD/CCYY MM/DD/CCYY XXXXXXXXXX XXXX MM/DD/CCYY MM/DD/CCYY

999999999 9999999999  XXXXXXXXXXXX XXXXXXXXXXXXXXX XXXXXXXXXXXXX X  XXXX MM/DD/CCYY MM/DD/CCYY XXXXXXXXXX XXXX MM/DD/CCYY MM/DD/CCYY
                                                                  XXXX MM/DD/CCYY MM/DD/CCYY XXXXXXXXXX XXXX MM/DD/CCYY MM/DD/CCYY
                                                                  XXXX MM/DD/CCYY MM/DD/CCYY XXXXXXXXXX XXXX MM/DD/CCYY MM/DD/CCYY
                                                                  XXXX MM/DD/CCYY MM/DD/CCYY XXXXXXXXXX XXXX MM/DD/CCYY MM/DD/CCYY

                                        ***   END OF REPORT   ***

                                        ***   NO DATA THIS RUN   ***
```

3.8.20.3 Field Descriptions

Field	Description	Length	Data Type	DB Table	DB Attributes
Eff Date	Effective date on the manual transaction.	8	Date (MM/DD/CCYY)	T_BUYA_PREM/T_BUYB_PREM	DTE_EFFECTIVE

Field	Description	Length	Data Type	DB Table	DB Attributes
Eff Date [Current Buy-In]	Current Buy-In effective date of the corresponding part.	8	Date (MM/DD/CCYY)	T_BUYA_PREM/T_BUYB_PREM	DTE_EFFECTIVE
End Date	End date on the manual transaction.	8	Date (MM/DD/CCYY)	T_BUYA_PREM/T_BUYB_PREM	DTE_STOP
End Date [Current Buy-In]	Current Buy-In end date of the corresponding part.	8	Date (MM/DD/CCYY)	T_BUYA_PREM/T_BUYB_PREM	DTE_STOP
First Name	Member's first name.	13	Character	T_RE_BASE	NAM_FIRST
HIC	Member HIC ID.	12	Character	T_RE_BASE	ID_MEDICARE
Last Name	Member's last name.	15	Character	T_RE_BASE	NAM_LAST
MI	Member's middle initial.	1	Character	T_RE_BASE	NAM_MID_INIT
Medicaid ID	Member identification number (Medicaid ID).	10	Number	T_RE_BASE	ID_MEDICAID
New MAID	Member identification number on the manual transaction.	10	Character	T_BUYA_PREM/T_BUYB_PREM	ID_MEDICAID
Orig ID	Original Member ID on the Manual Transaction.	9	Number	T_BUYA_PREM/T_BUYB_PREM	ID_MEDICARE
Part	Buy-In part on the manual transaction.	1	Character		CALCULATED
Tran [Current Buy-In]	Current Buy-In transaction code of the corresponding part.	4	Character	T_BUYA_PREM/T_BUYB_PREM	CDE_BUY_TXN

Field	Description	Length	Data Type	DB Table	DB Attributes
Trans Code	Buy-In transaction code on the manual transaction.	4	Character	T_BUYA_PREM/T_BUYB_PREM	CDE_BUY_TXN

3.8.20.4 Associated Programs

Program	Description
buypm407	Manual Transactions Submitted Report
copy2crld	CRLD copy
buypm408	Matching Transactions Report

3.8.20.5 Associated Requirements

ID
30.090.001.001.2

3.8.20.6 Change Orders

ID	Name	Description
4511	4007-M heading date	Aside from defect 4048 (data needs), the date in the report heading is off centered.
482	Manual Transactions Submitted	There is a need to duplicate the KYMQ2010-R001 report.

3.8.21 BUY-4008-M -- Buy-In Matching Transactions

The Buy-In Matching Transaction report is a Commonwealth-specific report.

This report displays transactions sent to CMS and the matching billing transactions sent by CMS for the member. These transactions require little or no Commonwealth intervention to process. The purpose of the report is historical and to provide auditing capability.

3.8.21.1 Technical Name

BUY-4008-M

3.8.21.2 Buy-In Matching Transactions Layout

```
Report   : BUY-4008-M                    COMMONWEALTH OF KENTUCKY                    Run Date: MM/DD/CCYY
Process  : BUYJM408                 MEDICAID MANAGEMENT INFORMATION SYSTEM          Run Time:   99:99:99
Location: BUYPM408                       MATCHING TRANSACTIONS REPORT               Page:          999
                                                MM/DD/CCYY

ORIG ID     HIC ID        TXN CODE    PREMIUM   EFF DATE    END DATE    SRC  PART
999999999   XXXXXXXXXXXX    XX      99,999.99   MM/DD/CCY   MM/DD/CCYY   X    X
999999999   XXXXXXXXXXXX    XX      99,999.99   MM/DD/CCY   MM/DD/CCYY   X    X
999999999   XXXXXXXXXXXX    XX      99,999.99   MM/DD/CCY   MM/DD/CCYY   X    X
999999999   XXXXXXXXXXXX    XX      99,999.99   MM/DD/CCY   MM/DD/CCYY   X    X
999999999   XXXXXXXXXXXX    XX      99,999.99   MM/DD/CCY   MM/DD/CCYY   X    X
999999999   XXXXXXXXXXXX    XX      99,999.99   MM/DD/CCY   MM/DD/CCYY   X    X
999999999   XXXXXXXXXXXX    XX      99,999.99   MM/DD/CCY   MM/DD/CCYY   X    X
999999999   XXXXXXXXXXXX    XX      99,999.99   MM/DD/CCY   MM/DD/CCYY   X    X
999999999   XXXXXXXXXXXX    XX      99,999.99   MM/DD/CCY   MM/DD/CCYY   X    X
999999999   XXXXXXXXXXXX    XX      99,999.99   MM/DD/CCY   MM/DD/CCYY   X    X
999999999   XXXXXXXXXXXX    XX      99,999.99   MM/DD/CCY   MM/DD/CCYY   X    X

                         ***   END OF REPORT   ***

                         ***   NO DATA THIS RUN   ***
```

3.8.21.3 Field Descriptions

Field	Description	Length	Data Type	DB Table	DB Attributes
Eff Date	Effective date	8	Date (MM/DD/CCYY)	T_BUYA_BILL/T_BUYB_BILL	DTE_EFFECTIVE
End Date`	End date	8	Date (MM/DD/CCYY)	T_BUYA_BILL/T_BUYB_BILL	DTE_END

Field	Description	Length	Data Type	DB Table	DB Attributes
HIC ID	Member HIC ID	12	Character	T_RE_BASE	ID_MEDICARE
Orig ID	Original member ID	9	Number	T_RE_BASE	ID_MEDICAID
Part	Agency	1	Character	T_BUYA_BILL/T_BUYB_BILL	CDE_AGENCY
Premium	Premium amount	7	Number	T_BUYA_BILL/T_BUYB_BILL	AMT_PREMIUM
SRC	Update source code	1	Character	T_BUYB_BILL	CDE_SOURCE
TXN Code	Transaction code	2	Character	T_BUYA_BILL/T_BUYB_BILL	CDE_BUY_TXN

3.8.21.4 Associated Programs

Program	Description
copy2crld	CRLD copy

3.8.21.5 Associated Requirements

ID
30.090.001.001.2

3.8.21.6 Change Orders

ID	Name	Description
483	Matching Transactions Report	There is a need to duplicate the KYMQ7000-R001 report.

3.8.22 BUY-4009-M -- Buy-In Members Not Billed

The Buy-In Members Not Billed report is a Commonwealth-specific report.

This report displays the list of members that were billed for in the last billing period, are still active, but did not receive a billing transaction from CMS for the current billing period. The report informs the Commonwealth of the need to research the member and determine the reason for the lack of billing.

3.8.22.1 Technical Name

BUY-4009-M

3.8.22.2 Buy-In Members Not Billed Layout

```
Report  : BUY-4009-M                    COMMONWEALTH OF KENTUCKY                    Run Date: MM/DD/CCYY
Process : BUYJM409                 MEDICAID MANAGEMENT INFORMATION SYSTEM          Run Time:   99:99:99
Location: BUYPM409                  MEMBERS CMS DID NOT BILL FOR REPORT            Page:          999
                                              MM/DD/CCYY

ORIG ID     HIC ID        TXN CODE    PREMIUM   EFF DATE    END DATE    SRC  PART
999999999   XXXXXXXXXXXX     XX     99,999.99  MM/DD/CCY   MM/DD/CCYY   X    X
999999999   XXXXXXXXXXXX     XX     99,999.99  MM/DD/CCY   MM/DD/CCYY   X    X
999999999   XXXXXXXXXXXX     XX     99,999.99  MM/DD/CCY   MM/DD/CCYY   X    X
999999999   XXXXXXXXXXXX     XX     99,999.99  MM/DD/CCY   MM/DD/CCYY   X    X
999999999   XXXXXXXXXXXX     XX     99,999.99  MM/DD/CCY   MM/DD/CCYY   X    X
999999999   XXXXXXXXXXXX     XX     99,999.99  MM/DD/CCY   MM/DD/CCYY   X    X
999999999   XXXXXXXXXXXX     XX     99,999.99  MM/DD/CCY   MM/DD/CCYY   X    X
999999999   XXXXXXXXXXXX     XX     99,999.99  MM/DD/CCY   MM/DD/CCYY   X    X
999999999   XXXXXXXXXXXX     XX     99,999.99  MM/DD/CCY   MM/DD/CCYY   X    X
999999999   XXXXXXXXXXXX     XX     99,999.99  MM/DD/CCY   MM/DD/CCYY   X    X
999999999   XXXXXXXXXXXX     XX     99,999.99  MM/DD/CCY   MM/DD/CCYY   X    X

                         ***   END OF REPORT   ***

                         ***   NO DATA THIS RUN   ***
```

3.8.22.3 Field Descriptions

Field	Description	Length	Data Type	DB Table	DB Attributes
Eff Date	Effective date	8	Date (MM/DD/CCYY)	T_BUYA_PERD/T_BUYB_PERD	DTE_EFFECTIVE

Field	Description	Length	Data Type	DB Table	DB Attributes
End Date	End date	8	Date (MM/DD/CCYY)	T_BUYA_PERD/T_BUYB_PERD	DTE_END
HIC ID	Member HIC ID	12	Character	T_RE_BASE	ID_MEDICARE
Orig ID	Original member ID	9	Number	T_RE_BASE	ID_MEDICAID
Part	Agency	1	Character	T_BUYA_BILL/T_BUYB_BILL	CDE_AGENCY
Premium	Premium amount	7	Number	T_BUYA_BILL/T_BUYB_BILL	AMT_PREMIUM
SRC	Update source code	1	Character	T_BUYA_BILL/T_BUYB_BILL	CDE_SOURCE
TXN Code	Transaction code	2	Character	T_BUYA_BILL/T_BUYB_BILL	CDE_BUY_TXN

3.8.22.4 Associated Programs

Program	Description
buypm409	Recipients Not Billed Report
copy2crld	CRLD copy

3.8.22.5 Associated Requirements

ID
30.090.001.001.2

3.8.22.6 Change Orders

ID	Name	Description
484	Recipients Not Billed Report	There is a need to duplicate the KYMQ7000-R002 report.

3.8.23 BUY-4010-M -- Buy-In Unmatched Members Billed

The Buy-In Unmatched Members Billed report is a Commonwealth-specific report.

This report displays billing transactions sent by CMS that did not have a matching member on the iC database. This can occur when CMS accretes a member with the wrong state in the address. The report is the first step in investigating the accretion and manually adjusting the bill.

3.8.23.1 Technical Name

BUY-4010-M

3.8.23.2 Buy-In Unmatched Members Billed Layout

```
Report  : BUY-4010-M                    COMMONWEALTH OF KENTUCKY                    Run Date: MM/DD/CCYY
Process : BUYJM410                MEDICAID MANAGEMENT INFORMATION SYSTEM            Run Time:   99:99:99
Location: BUYPM410                UNMATCHED MEMBERS CMS BILLED FOR REPORT           Page:          999
                                            MM/DD/CCYY

ORIG ID     HIC ID        TXN CODE    PREMIUM   EFF DATE    END DATE    SRC  PART
999999999   XXXXXXXXXXXX     XX     99,999.99  MM/DD/CCY   MM/DD/CCYY   X    X
999999999   XXXXXXXXXXXX     XX     99,999.99  MM/DD/CCY   MM/DD/CCYY   X    X
999999999   XXXXXXXXXXXX     XX     99,999.99  MM/DD/CCY   MM/DD/CCYY   X    X
999999999   XXXXXXXXXXXX     XX     99,999.99  MM/DD/CCY   MM/DD/CCYY   X    X
999999999   XXXXXXXXXXXX     XX     99,999.99  MM/DD/CCY   MM/DD/CCYY   X    X
999999999   XXXXXXXXXXXX     XX     99,999.99  MM/DD/CCY   MM/DD/CCYY   X    X
999999999   XXXXXXXXXXXX     XX     99,999.99  MM/DD/CCY   MM/DD/CCYY   X    X
999999999   XXXXXXXXXXXX     XX     99,999.99  MM/DD/CCY   MM/DD/CCYY   X    X
999999999   XXXXXXXXXXXX     XX     99,999.99  MM/DD/CCY   MM/DD/CCYY   X    X
999999999   XXXXXXXXXXXX     XX     99,999.99  MM/DD/CCY   MM/DD/CCYY   X    X
999999999   XXXXXXXXXXXX     XX     99,999.99  MM/DD/CCY   MM/DD/CCYY   X    X

                          ***   END OF REPORT   ***

                          ***   NO DATA THIS RUN   ***
```

3.8.23.3 Field Descriptions

Field	Description	Length	Data Type	DB Table	DB Attributes
Eff Date	Effective date	8	Date (MM/DD/CCYY)	T_BUYA_MISMATCH/T_BUYB_MISMATCH	DTE_EFFECTIVE

Field	Description	Length	Data Type	DB Table	DB Attributes
End Date	End date	8	Date (MM/DD/CCYY)	T_BUYA_MISMATCH/T_BUYB_MISMATCH	DTE_STOP
HIC ID	Member HIC ID	12	Character	T_BUYA_MISMATCH/T_BUYB_MISMATCH	ID_MEDICARE
Orig ID	Original member ID	9	Number	T_BUYA_MISMATCH/T_BUYB_MISMATCH	ID_MEDICAID
Part	Agency	1	Character	T_BUYA_MISMATCH/T_BUYB_MISMATCH	CDE_AGENCY
Premium	Premium amount	7	Number	T_BUYA_MISMATCH/T_BUYB_MISMATCH	AMT_PREMIUM
SRC	Update source code	1	Character	T_BUYB_MISMATCH	CDE_SOURCE
TXN Code	Transaction code	2	Character	T_BUYA_MISMATCH/T_BUYB_MISMATCH	CDE_BUY_TXN

3.8.23.4 Associated Programs

Program	Description
copy2crld	CRLD copy
buypm410	Unmatched Recipients Billed Report

3.8.23.5 Associated Requirements

ID
30.090.001.001.2

3.8.23.6 Change Orders

ID	Name	Description
3944	4010-M heading date missing	Date in heading is missing.
485	Unmatched Recipients Billed	There is a need to duplicate the KYMQ7000-R003 report.

3.8.24 BUY-4011-M -- Buy-In Misc Debit Credit

The Buy-In Misc Debit/Credit Transaction report is a Commonwealth-specific report.

This report displays miscellaneous transactions for both Part A and Part B where the transaction code is 41, 50, 51, 53, 61, 1750, 1751, 1753, or 1161 for the current processing month.

3.8.24.1 Technical Name

BUY-4011-M

3.8.24.2 Buy-In Misc Debit Credit Layout

```
Report   : BUY-4011-M                          COMMONWEALTH OF KENTUCKY                          Run Date: MM/DD/CCYY
Process  : BUYJM411                       MEDICAID MANAGEMENT INFORMATION SYSTEM                 Run Time:   99:99:99
Location: BUYPM411                     MISCELLANEOUS DEBIT/CREDIT TRANSACTIONS REPORT            Page:          999
                                                      MM/DD/CCYY

ORIG ID     HIC ID        TXN CODE    PREMIUM   EFF DATE    END DATE    SRC  PART
999999999   XXXXXXXXXXXX     XX     99,999.99   MM/DD/CCY   MM/DD/CCYY   X    X
999999999   XXXXXXXXXXXX     XX     99,999.99   MM/DD/CCY   MM/DD/CCYY   X    X
999999999   XXXXXXXXXXXX     XX     99,999.99   MM/DD/CCY   MM/DD/CCYY   X    X
999999999   XXXXXXXXXXXX     XX     99,999.99   MM/DD/CCY   MM/DD/CCYY   X    X
999999999   XXXXXXXXXXXX     XX     99,999.99   MM/DD/CCY   MM/DD/CCYY   X    X
999999999   XXXXXXXXXXXX     XX     99,999.99   MM/DD/CCY   MM/DD/CCYY   X    X
999999999   XXXXXXXXXXXX     XX     99,999.99   MM/DD/CCY   MM/DD/CCYY   X    X
999999999   XXXXXXXXXXXX     XX     99,999.99   MM/DD/CCY   MM/DD/CCYY   X    X
999999999   XXXXXXXXXXXX     XX     99,999.99   MM/DD/CCY   MM/DD/CCYY   X    X
999999999   XXXXXXXXXXXX     XX     99,999.99   MM/DD/CCY   MM/DD/CCYY   X    X
999999999   XXXXXXXXXXXX     XX     99,999.99   MM/DD/CCY   MM/DD/CCYY   X    X

                          ***   END OF REPORT   ***

                          ***   NO DATA THIS RUN   ***
```

3.8.24.3 Field Descriptions

Field	Description	Length	Data Type	DB Table	DB Attributes
Eff Date	Effective date	8	Date (MM/DD/CCYY)	T_BUYA_BILL/T_BUYB_BILL	DTE_EFFECTIVE

Field	Description	Length	Data Type	DB Table	DB Attributes
End Date	End date	8	Date (MM/DD/CCYY)	T_BUYA_BILL/T_BUYB_BILL	DTE_END
HIC ID	Member HIC ID	12	Character	T_RE_BASE	ID_MEDICARE
Orig ID	Original member ID	9	Number	T_RE_BASE	ID_MEDICAID
Part	Agency	1	Character	T_BUYA_BILL/T_BUYB_BILL	CDE_AGENCY
Premium	Premium amount	7	Number	T_BUYA_BILL/T_BUYB_BILL	CDE_PREMIUM
SRC	Update source code	1	Character	T_BUYB_BILL	CDE_SOURCE
TXN Code	Transaction code	2	Character	T_BUYA_BILL/T_BUYB_BILL	CDE_BUY_TXN

3.8.24.4 Associated Programs

Program	Description
copy2crld	CRLD copy
buypm411	Misc Debit/Credit Report

3.8.24.5 Associated Requirements

ID
30.090.001.001.2

3.8.24.6 Change Orders

ID	Name	Description
486	Misc Debit/Credit Transactions	There is a need to duplicate the KYMQ7000-R004 report.

3.8.25 BUY-4310-M -- MMA Enrollment File

This is the MMA Enrollment report of DET and PRO records sent to CMS as part of the Part D/MMA enrollment process.

3.8.25.1 Technical Name

BUY-4310-M

3.8.25.2 MMA Enrollment File Layout

```
Report   : BUY-4310-M                                                                    Run Date: MM/DD/CCYY
Process  : BUYJM431                                                                      Run Time:   HH:MM:SS
Location: BUYPM431                          MMA ENROLLMENT FILE REPORT                   Page:         99,999
                                                  MM/DD/CCYY

REC  ELIG DATE ELIG MEDICARE ID  RRB SSN        FIRST NAME   MIDDLE NAME     LAST NAME           SUFFIX  SEX  DUAL  DRUG  FPL  INST
                    MEDICAID ID      DOB
XXX  MM/CCYY    X   XXXXXXXXXXXX  X  999999999  XXXXXXXXXXXX XXXXXXXXXXXXXXX XXXXXXXXXXXXXXXXXXXX XXXX    X    XX    X    X    X
                    XXXXXXXXXXXX     MM/DD/CCYY

XXX  MM/CCYY    X   XXXXXXXXXXXX  X  999999999  XXXXXXXXXXXX XXXXXXXXXXXXXXX XXXXXXXXXXXXXXXXXXXX XXXX    X    XX    X    X    X
                    XXXXXXXXXXXX     MM/DD/CCYY

XXX  MM/CCYY    X   XXXXXXXXXXXX  X  999999999  XXXXXXXXXXXX XXXXXXXXXXXXXXX XXXXXXXXXXXXXXXXXXXX XXXX    X    XX    X    X    X
                    XXXXXXXXXXXX     MM/DD/CCYY

XXX  MM/CCYY    X   XXXXXXXXXXXX  X  999999999  XXXXXXXXXXXX XXXXXXXXXXXXXXX XXXXXXXXXXXXXXXXXXXX XXXX    X    XX    X    X    X
                    XXXXXXXXXXXX     MM/DD/CCYY

                                        *** END OF REPORT ***
                                                or
                                     *** NO DATA THIS RUN ***
```

3.8.25.3 Field Descriptions

Field	Description	Length	Data Type	DB Table	DB Attributes
DOB	Date of birth (MM/DD/CCYY)	8	Number	T_RE_BASE	DTE_BIRTH
DRUG	Drug coverage indicator.	1	Character	N/A	Program Determined
DUAL	Dual status code	2	Character	N/A	Program Determined

Field	Description	Length	Data Type	DB Table	DB Attributes
ELIG DATE	Eligibility month for enrollment	6	Number	N/A	Program determined
FIRST NAME	First name	12	Character	T_RE_BASE	NAM_FIRST
FPL	Federal poverty level indicator	1	Character	N/A	Program Determined
GND	Identifies the sex of a person	1	Character	T_RE_BASE	CDE_SEX
INST	Institutional Status Code indicator	1	Character	N/A	Program Determined
LAST NAME	Last name	20	Character	T_RE_BASE	NAM_LAST
MEDICAID ID	The Medicaid identifier	12	Character	T_RE_BASE	ID_MEDICAID
MEDICARE ID	The member's Medicare ID	12	Character	T_RE_MEDICARE_A/B	ID_MEDICAIRE
MIDDLE NAME	Middle name	15	Character	T_RE_BASE	NAM_MID_INIT
REC	Record type	3	Character	N/A	Program Determined
RRB	Railroad Retirement Board indicator	1	Character	N/A	H or space
SSN	Identification number that was assigned by the Social Security Administration	9	Number	T_RE_BASE	NUM_SSN
SUFFIX	Suffixname	4	Character	T_RE_BASE	NAM_SUFFIX

3.8.25.4 Associated Programs

Program	Description
No associated Programs found.	

3.8.25.5 Associated Requirements

ID
30.090.001.002.N01

3.8.25.6 Change Orders

ID	Name	Description
7668	Part D Enrollment File Report	The ELG-0652-M report from Core does not support PRO or LIS record types, and does not display needed indicators.

3.8.26 BUY-4311-M -- LIS Enrollment File

This is the MMA Enrollment Report of LIS records sent to CMS as part of the Part D/MMA enrollment process.

3.8.26.1 Technical Name

BUY-4311-M

3.8.26.2 LIS Enrollment File Layout

```
Report  : BUY-4311-M                                  interChange MMIS                                  Run Date: MM/DD/CCYY
Process : BUYJM431                                    REPORTING SYSTEM                                  Run Time:   HH:MM:SS
Location: BUYPM431                                LIS ENROLLMENT FILE REPORT                            Page:        99,999
                                                        MM/DD/CCYY

                                                                                                  ------------ LIS SUBSIDY ------------
ELIG DATE MEDICARE ID  RRB SSN        FIRST NAME   MIDDLE NAME     LAST NAME           SUFFIX AC APPR/DEN    START DATE  END DATE
ELIG STAT MEDICAID ID      DOB        SEX  DUAL  DRUG  FPL  INST                               FPL  LVL  RSC  DEN  APP  CHG  CAN
MM/CCYY   XXXXXXXXXXXX  X  999999999  XXXXXXXXXXX XXXXXXXXXXXXXXX XXXXXXXXXXXXXXXXXXXXXX XXXX X  MM/DD/CCYY MM/DD/CCYY MM/DD/CCYY
   X      XXXXXXXXXXXX     MM/DD/CCYY X    XX    X     X    X                                 999  999   Y    Y    Y    Y    Y

MM/CCYY   XXXXXXXXXXXX  X  999999999  XXXXXXXXXXX XXXXXXXXXXXXXXX XXXXXXXXXXXXXXXXXXXXXX XXXX X  MM/DD/CCYY MM/DD/CCYY MM/DD/CCYY
   X      XXXXXXXXXXXX     MM/DD/CCYY X    XX    X     X    X                                 999  999   Y    Y    Y    Y    Y

MM/CCYY   XXXXXXXXXXXX  X  999999999  XXXXXXXXXXX XXXXXXXXXXXXXXX XXXXXXXXXXXXXXXXXXXXXX XXXX X  MM/DD/CCYY MM/DD/CCYY MM/DD/CCYY
   X      XXXXXXXXXXXX     MM/DD/CCYY X    XX    X     X    X                                 999  999   Y    Y    Y    Y    Y

MM/CCYY   XXXXXXXXXXXX  X  999999999  XXXXXXXXXXX XXXXXXXXXXXXXXX XXXXXXXXXXXXXXXXXXXXXX XXXX X  MM/DD/CCYY MM/DD/CCYY MM/DD/CCYY
   X      XXXXXXXXXXXX     MM/DD/CCYY X    XX    X     X    X                                 999  999   Y    Y    Y    Y    Y

                                                 *** END OF REPORT ***
                                                          or
                                               *** NO DATA THIS RUN ***
```

3.8.26.3 Field Descriptions

Field	Description	Length	Data Type	DB Table	DB Attributes
AC	Subsidy approval code	1	Character	T_BUY_PARTD_LIS	IND_SUBS_APPR
APP	Result of appeal	1	Character	T_BUY_PARTD_LIS	IND_APPEAL
APPR/DEN	Approved/Denied date	8	Number	T_BUY_PARTD_LIS	DTE_SUBS_APPR

Field	Description	Length	Data Type	DB Table	DB Attributes
CAN	Determination cancelled	1	Character	T_BUY_PARTD_LIS	IND_SUBS_CANCEL
CHG	Change to previous determination	1	Character	T_BUY_PARTD_LIS	IND_SUBS_CHANGED
DEN	Denial basis	1	Character	T_BUY_PARTD_LIS	IND_PARTD_DENIAL
DOB	Date of birth (MM/DD/CCYY)	8	Number	T_BUY_PARTD_LIS	DTE_BIRTH
DRUG	Drug coverage indicator	1	Character	T_BUY_PARTD_LIS	IND_DRUG_COV
DUAL	Dual status code	2	Character	T_BUY_PARTD_LIS	CDE_DUAL
ELIG DATE	Eligibility date	6	Number	T_BUY_PARTD_LIS	DTE_ELIG
ELIG STAT	Eligibility status code	1	Character	T_BUY_PARTD_LIS	Program Determined
END DATE	End date	8	Number	T_BUY_PARTD_LIS	DTE_SUBS_END
FIRST NAME	First name	12	Character	T_BUY_PARTD_LIS	NAM_FIRST
FPL	Federal poverty level indicator	1	Character	T_BUY_PARTD_LIS	IND_FPL
FPL%	Part D % of FPL	3	Number	T_BUY_PARTD_LIS	NUM_POV_PERCENT
GND	Identifies the sex of a person	1	Character	T_BUY_PARTD_LIS	CDE_SEX
INST	Institutional status	1	Character	T_BUY_PARTD_LIS	IND_INSTITUTION
LAST NAME	Last name	20	Character	T_BUY_PARTD_LIS	NAM_LAST

Field	Description	Length	Data Type	DB Table	DB Attributes
LVL	Subsidy Level	3	Number	T_BUY_PARTD_LIS	NUM_SUBS_LEVEL
MEDICAID ID	The Medicaid identifier	12	Character	T_BUY_PARTD_LIS	ID_MEDICAID
MEDICARE ID	The Medicare identifier	12	Character	T_BUY_PARTD_LIS	ID_MEDICARE
MIDDLE NAME	Middle name	15	Character	T_BUY_PARTD_LIS	NAM_MIDDLE
RRB	Railroad Retirement Board indicator	1	Character	T_BUY_PARTD_LIS	IND_RRB
RSC	Subsidy reason code	1	Character	T_BUY_PARTD_LIS	CDE_RESOURCE_LVL
SSN	Identification number that was assigned by the Social Security Administration	9	Number	T_BUY_PARTD_LIS	NUM_SSN
START DATE	Start date	8	Number	T_BUY_PARTD_LIS	DTE_SUBS_START
SUFFIX	Sufffix	4	Character	T_BUY_PARTD_LIS	NAM_SUFFIX

3.8.26.4 Associated Programs

Program	Description
No associated Programs found.	

3.8.26.5 Associated Requirements

ID
30.090.001.002.N01

3.8.26.6 Change Orders

ID	Name	Description
7668	Part D Enrollment File Report	The ELG-0652-M report from Core does not support PRO or LIS record types, and does not display needed indicators.

3.8.27 BUY-5003-M -- EDB Entitlement Errors

The EDB Entitlement Errors is an EDB processing report specific to the Commonwealth.

This report lists errors that have occurred during processing of the EDB file.

3.8.27.1 Technical Name

BUY-5003-M

3.8.27.2 EDB Entitlement Errors Layout

```
Report  : BUY-5003-M                          COMMONWEALTH OF KENTUCKY                          Run Date: MM/DD/CCYY
Process : BUYJM523                      MEDICAID MANAGEMENT INFORMATION SYSTEM                  Run Time:   99:99:99
Location: BUYPM523                       EDB/BUY-IN ENTITLEMENT ERRORS REPORT                   Page:          999
                                                   MM/DD/CCYY

            ------------------------- EDB -------------------------
            --------- PART A ---------- --------- PART B ----------
MEDICAID ID PAYOR BEG DATE   END DATE   PAYOR BEG DATE   END DATE    HIC ID      MISC DATA     COMMENT
XXXXXXXXXX   XXX  MM/DD/CCYY MM/DD/CCYY  XXX  MM/DD/CCYY MM/DD/CCYY  XXXXXXXXXX XXXXXXXXXXXX XXXXXXXXXXXXXXXXXXXXXXXXXXXXXXXXXXXX
XXXXXXXXXX   XXX  MM/DD/CCYY MM/DD/CCYY  XXX  MM/DD/CCYY MM/DD/CCYY  XXXXXXXXXX XXXXXXXXXXXX XXXXXXXXXXXXXXXXXXXXXXXXXXXXXXXXXXXX
XXXXXXXXXX   XXX  MM/DD/CCYY MM/DD/CCYY  XXX  MM/DD/CCYY MM/DD/CCYY  XXXXXXXXXX XXXXXXXXXXXX XXXXXXXXXXXXXXXXXXXXXXXXXXXXXXXXXXXX
XXXXXXXXXX   XXX  MM/DD/CCYY MM/DD/CCYY  XXX  MM/DD/CCYY MM/DD/CCYY  XXXXXXXXXX XXXXXXXXXXXX XXXXXXXXXXXXXXXXXXXXXXXXXXXXXXXXXXXX
XXXXXXXXXX   XXX  MM/DD/CCYY MM/DD/CCYY  XXX  MM/DD/CCYY MM/DD/CCYY  XXXXXXXXXX XXXXXXXXXXXX XXXXXXXXXXXXXXXXXXXXXXXXXXXXXXXXXXXX
XXXXXXXXXX   XXX  MM/DD/CCYY MM/DD/CCYY  XXX  MM/DD/CCYY MM/DD/CCYY  XXXXXXXXXX XXXXXXXXXXXX XXXXXXXXXXXXXXXXXXXXXXXXXXXXXXXXXXXX

                                      ***   END OF REPORT   ***

                                      ***   NO DATA THIS RUN   ***
```

3.8.27.3 Field Descriptions

Field	Description	Length	Data Type	DB Table	DB Attributes
Comment	Optional comment on why record was processed.	40	Character	T_RE_PS2_ERR	TXN_LAYOUT (PARSED)
HIC	Health Insurance Claim number.	12	Character	T_RE_PS2_ERR	TXN_LAYOUT (PARSED)
Medicaid ID	Member identification number (Medicaid ID).	10	Number	T_RE_PS2_ERR	TXN_LAYOUT (PARSED)

Field	Description	Length	Data Type	DB Table	DB Attributes
Part A Beg Date	Beginning date for Part A coverage.	10	Character	T_RE_PS2_ERR	TXN_LAYOUT (PARSED)
Part A End Date	Ending date for Part A coverage.	10	Character	T_RE_PS2_ERR	TXN_LAYOUT (PARSED)
Part A Opt	Reason the member is entitled to Part A.	1	Character	T_RE_PS2_ERR	TXN_LAYOUT (PARSED)
Part A Payor	Part A payor code.	3	Character	T_RE_PS2_ERR	TXN_LAYOUT (PARSED)
Part B Beg Date	Beginning date for Part B coverage.	10	Character	T_RE_PS2_ERR	TXN_LAYOUT (PARSED)
Part B End Date	Ending date for Part B coverage.	10	Character	T_RE_PS2_ERR	TXN_LAYOUT (PARSED)
Part B Opt	Reason the member is entitled to Part B.	1	Character	T_RE_PS2_ERR	TXN_LAYOUT (PARSED)
Part B Payor	Part B payor code.	3	Character	T_RE_PS2_ERR	TXN_LAYOUT (PARSED)

3.8.27.4 Associated Programs

Program	Description
copy2crld	CRLD copy
buypm523	EDB Entitlement Processing Reports

3.8.27.5 Associated Requirements

ID
30.090.001.004.6

3.8.27.6 Change Orders

ID	Name	Description
1464	EDB Processing Reports	There is a need to produce EDB processing reports.

3.8.28 BUY-5004-M -- EDB Entitlement Update

The EDB Entitlement Update is an EDB processing report specific to the Commonwealth.

This report lists updates successfully performed during monthly EDB processing.

3.8.28.1 Technical Name

BUY-5004-M

3.8.28.2 EDB Entitlement Update Layout

```
Report  : BUY-5004-M                          COMMONWEALTH OF KENTUCKY                          Run Date: MM/DD/CCYY
Process : BUYJM523                       MEDICAID MANAGEMENT INFORMATION SYSTEM                 Run Time:   99:99:99
Location: BUYPM523                        EDB/BUY-IN ENTITLEMENT UPDATE REPORT                  Page:          999
                                                     MM/DD/CCYY

            ------------------------- EDB -------------------------
            --------- PART A ---------- --------- PART B ----------
MEDICAID ID PAYOR BEG DATE   END DATE   PAYOR BEG DATE   END DATE    HIC ID      MISC DATA     COMMENT
XXXXXXXXXX   XXX  MM/DD/CCYY MM/DD/CCYY  XXX  MM/DD/CCYY MM/DD/CCYY  XXXXXXXXXXX XXXXXXXXXXXXX XXXXXXXXXXXXXXXXXXXXXXXXXXXXXXXXXXXXXXXX
XXXXXXXXXX   XXX  MM/DD/CCYY MM/DD/CCYY  XXX  MM/DD/CCYY MM/DD/CCYY  XXXXXXXXXXX XXXXXXXXXXXXX XXXXXXXXXXXXXXXXXXXXXXXXXXXXXXXXXXXXXXXX
XXXXXXXXXX   XXX  MM/DD/CCYY MM/DD/CCYY  XXX  MM/DD/CCYY MM/DD/CCYY  XXXXXXXXXXX XXXXXXXXXXXXX XXXXXXXXXXXXXXXXXXXXXXXXXXXXXXXXXXXXXXXX
XXXXXXXXXX   XXX  MM/DD/CCYY MM/DD/CCYY  XXX  MM/DD/CCYY MM/DD/CCYY  XXXXXXXXXXX XXXXXXXXXXXXX XXXXXXXXXXXXXXXXXXXXXXXXXXXXXXXXXXXXXXXX
XXXXXXXXXX   XXX  MM/DD/CCYY MM/DD/CCYY  XXX  MM/DD/CCYY MM/DD/CCYY  XXXXXXXXXXX XXXXXXXXXXXXX XXXXXXXXXXXXXXXXXXXXXXXXXXXXXXXXXXXXXXXX
XXXXXXXXXX   XXX  MM/DD/CCYY MM/DD/CCYY  XXX  MM/DD/CCYY MM/DD/CCYY  XXXXXXXXXXX XXXXXXXXXXXXX XXXXXXXXXXXXXXXXXXXXXXXXXXXXXXXXXXXXXXXX

                                         ***   END OF REPORT   ***

                                         ***   NO DATA THIS RUN   ***
```

3.8.28.3 Field Descriptions

Field	Description	Length	Data Type	DB Table	DB Attributes
Comment	Optional comment on why record was processed	40	Character	T_RE_PS2_LOG	TXN_LAYOUT (PARSED)
HIC	Health Insurance Claim number	12	Character	T_RE_PS2_LOG	TXN_LAYOUT (PARSED)
Medicaid ID	Member identification number (Medicaid ID)	10	Number	T_RE_PS2_LOG	TXN_LAYOUT (PARSED)

Field	Description	Length	Data Type	DB Table	DB Attributes
Part A Beg Date	Beginning date for Part A coverage	10	Character	T_RE_PS2_LOG	TXN_LAYOUT (PARSED)
Part A End Date	Ending date for Part A coverage	10	Character	T_RE_PS2_LOG	TXN_LAYOUT (PARSED)
Part A Opt	Reason the member is entitled to Part A	1	Character	T_RE_PS2_LOG	TXN_LAYOUT (PARSED)
Part A Payor	Part A payor code	3	Character	T_RE_PS2_LOG	TXN_LAYOUT (PARSED)
Part B Beg Date	Beginning date for Part B coverage	10	Character	T_RE_PS2_LOG	TXN_LAYOUT (PARSED)
Part B End Date	Ending date for Part B coverage	10	Character	T_RE_PS2_LOG	TXN_LAYOUT (PARSED)
Part B Opt	Reason the member is entitled to Part B	1	Character	T_RE_PS2_LOG	TXN_LAYOUT (PARSED)
Part B Payor	Part B payor code	3	Character	T_RE_PS2_LOG	TXN_LAYOUT (PARSED)

3.8.28.4 Associated Programs

Program	Description
copy2crld	CRLD copy
buypm504	EDB Entitlement Update Report
copy2crld	CRLD copy
buypm523	EDB Entitlement Processing Reports

3.8.28.5 Associated Requirements

ID
30.090.001.004.6

3.8.28.6 Change Orders

ID	Name	Description
1464	EDB Processing Reports	There is a need to produce EDB processing reports.

3.8.29 BUY-5005-M -- EDB Entitlement Shutdown

The EDB Entitlement Shutdown report is an EDB processing report specific to the Commonwealth.

This report lists all members whose Buy-In eligibility is successfully shut down during EDB processing.

3.8.29.1 Technical Name

BUY-5005-M

3.8.29.2 EDB Entitlement Shutdown Layout

```
Report  : BUY-5005-M                          COMMONWEALTH OF KENTUCKY                          Run Date: MM/DD/CCYY
Process : BUYJM523                      MEDICAID MANAGEMENT INFORMATION SYSTEM                  Run Time:   99:99:99
Location: BUYPM523                      EDB/BUY-IN ENTITLEMENT SHUTDOWN REPORT                  Page:          999
                                                     MM/DD/CCYY

            ------------------------- EDB -------------------------
            --------- PART A ---------- --------- PART B ----------
MEDICAID ID       BEG DATE   END DATE        BEG DATE   END DATE    HIC ID      MISC DATA     COMMENT
XXXXXXXXXX        MM/DD/CCYY MM/DD/CCYY      MM/DD/CCYY MM/DD/CCYY  XXXXXXXXXXX XXXXXXXXXXXXX XXXXXXXXXXXXXXXXXXXXXXXXXXXXXXXXXXXX
XXXXXXXXXX        MM/DD/CCYY MM/DD/CCYY      MM/DD/CCYY MM/DD/CCYY  XXXXXXXXXXX XXXXXXXXXXXXX XXXXXXXXXXXXXXXXXXXXXXXXXXXXXXXXXXXX
XXXXXXXXXX        MM/DD/CCYY MM/DD/CCYY      MM/DD/CCYY MM/DD/CCYY  XXXXXXXXXXX XXXXXXXXXXXXX XXXXXXXXXXXXXXXXXXXXXXXXXXXXXXXXXXXX
XXXXXXXXXX        MM/DD/CCYY MM/DD/CCYY      MM/DD/CCYY MM/DD/CCYY  XXXXXXXXXXX XXXXXXXXXXXXX XXXXXXXXXXXXXXXXXXXXXXXXXXXXXXXXXXXX
XXXXXXXXXX        MM/DD/CCYY MM/DD/CCYY      MM/DD/CCYY MM/DD/CCYY  XXXXXXXXXXX XXXXXXXXXXXXX XXXXXXXXXXXXXXXXXXXXXXXXXXXXXXXXXXXX
XXXXXXXXXX        MM/DD/CCYY MM/DD/CCYY      MM/DD/CCYY MM/DD/CCYY  XXXXXXXXXXX XXXXXXXXXXXXX XXXXXXXXXXXXXXXXXXXXXXXXXXXXXXXXXXXX

                                            ***   END OF REPORT   ***

                                            ***   NO DATA THIS RUN   ***
```

3.8.29.3 Field Descriptions

Field	Description	Length	Data Type	DB Table	DB Attributes
Comment	Optional comment on why record was processed.	40	Character	T_RE_PS2_LOG	TXN_LAYOUT (PARSED)
Medicaid ID	Member identification number (Medicaid ID).	10	Number	T_RE_PS2_LOG	TXN_LAYOUT (PARSED)
Part A Beg Date	Beginning date for Part A coverage.	10	Character	T_RE_PS2_LOG	TXN_LAYOUT (PARSED)

Field	Description	Length	Data Type	DB Table	DB Attributes
Part A End Date	Ending date for Part A coverage.	10	Character	T_RE_PS2_LOG	TXN_LAYOUT (PARSED)
Part B Beg Date	Beginning date for Part B coverage.	10	Character	T_RE_PS2_LOG	TXN_LAYOUT (PARSED)
Part B End Date	Ending date for Part B coverage.	10	Character	T_RE_PS2_LOG	TXN_LAYOUT (PARSED)

3.8.29.4 Associated Programs

Program	Description
copy2crld	CRLD copy
buypm505	EDB Entitlement Shutdown Report
copy2crld	CRLD copy
buypm523	EDB Entitlement Processing Reports

3.8.29.5 Associated Requirements

ID
30.090.001.004.6

3.8.29.6 Change Orders

ID	Name	Description
1464	EDB Processing Reports	There is a need to produce EDB processing reports.

3.8.30 BUY-5006-M -- EDB Entitlement Add

The EDB Entitlement Add report is an EDB processing report specific to the Commonwealth.

This report lists all members who have Buy-In eligibility successfully added during EDB processing.

3.8.30.1 Technical Name

BUY-5006-M

3.8.30.2 EDB Entitlement Add Layout

```
Report   : BUY-5006-M                          COMMONWEALTH OF KENTUCKY                          Run Date: MM/DD/CCYY
Process  : BUYJM523                      MEDICAID MANAGEMENT INFORMATION SYSTEM                  Run Time:   99:99:99
Location: BUYPM523                         EDB/BUY-IN ENTITLEMENT ADDS REPORT                    Page:          999
                                                     MM/DD/CCYY

            ------------------------- EDB -------------------------
            --------- PART A ---------- --------- PART B ----------
MEDICAID ID PAYOR BEG DATE   END DATE   PAYOR BEG DATE   END DATE    HIC ID      MISC DATA     COMMENT
XXXXXXXXXX   XXX  MM/DD/CCYY MM/DD/CCYY  XXX  MM/DD/CCYY MM/DD/CCYY  XXXXXXXXXXX XXXXXXXXXXXXX XXXXXXXXXXXXXXXXXXXXXXXXXXXXXXXXXXXXXXXX
XXXXXXXXXX   XXX  MM/DD/CCYY MM/DD/CCYY  XXX  MM/DD/CCYY MM/DD/CCYY  XXXXXXXXXXX XXXXXXXXXXXXX XXXXXXXXXXXXXXXXXXXXXXXXXXXXXXXXXXXXXXXX
XXXXXXXXXX   XXX  MM/DD/CCYY MM/DD/CCYY  XXX  MM/DD/CCYY MM/DD/CCYY  XXXXXXXXXXX XXXXXXXXXXXXX XXXXXXXXXXXXXXXXXXXXXXXXXXXXXXXXXXXXXXXX
XXXXXXXXXX   XXX  MM/DD/CCYY MM/DD/CCYY  XXX  MM/DD/CCYY MM/DD/CCYY  XXXXXXXXXXX XXXXXXXXXXXXX XXXXXXXXXXXXXXXXXXXXXXXXXXXXXXXXXXXXXXXX
XXXXXXXXXX   XXX  MM/DD/CCYY MM/DD/CCYY  XXX  MM/DD/CCYY MM/DD/CCYY  XXXXXXXXXXX XXXXXXXXXXXXX XXXXXXXXXXXXXXXXXXXXXXXXXXXXXXXXXXXXXXXX
XXXXXXXXXX   XXX  MM/DD/CCYY MM/DD/CCYY  XXX  MM/DD/CCYY MM/DD/CCYY  XXXXXXXXXXX XXXXXXXXXXXXX XXXXXXXXXXXXXXXXXXXXXXXXXXXXXXXXXXXXXXXX

                                   ***   END OF REPORT   ***

                                   ***   NO DATA THIS RUN   ***
```

3.8.30.3 Field Descriptions

Field	Description	Length	Data Type	DB Table	DB Attributes
Comment	Optional comment on why record was processed.	40	Character	T_RE_PS2_LOG	TXN_LAYOUT (PARSED)
HIC	Health Insurance Claim number.	12	Character	T_RE_PS2_LOG	TXN_LAYOUT (PARSED)
Medicaid ID	Member MAID number (Medicaid ID).	10	Number	T_RE_PS2_LOG	TXN_LAYOUT (PARSED)

Field	Description	Length	Data Type	DB Table	DB Attributes
Part A Beg Date	Beginning date for Part A coverage.	10	Character	T_RE_PS2_LOG	TXN_LAYOUT (PARSED)
Part A End Date	Ending date for Part A coverage.	10	Character	T_RE_PS2_LOG	TXN_LAYOUT (PARSED)
Part A Opt	Reason the member is entitled to Part A.	1	Character	T_RE_PS2_LOG	TXN_LAYOUT (PARSED)
Part A Payor	Part A payor code.	3	Character	T_RE_PS2_LOG	TXN_LAYOUT (PARSED)
Part B Beg Date	Beginning date for Part B coverage.	10	Character	T_RE_PS2_LOG	TXN_LAYOUT (PARSED)
Part B End Date	Ending date for Part B coverage.	10	Character	T_RE_PS2_LOG	TXN_LAYOUT (PARSED)
Part B Opt	Reason the member is entitled to Part B.	1	Character	T_RE_PS2_LOG	TXN_LAYOUT (PARSED)
Part B Payor	Part B payor code.	3	Character	T_RE_PS2_LOG	TXN_LAYOUT (PARSED)

3.8.30.4 Associated Programs

Program	Description
copy2crld	CRLD copy
buypm506	EDB Entitlement Add Report
copy2crld	CRLD copy
buypm523	EDB Entitlement Processing Reports

3.8.30.5 Associated Requirements

ID
30.090.001.004.6

3.8.30.6 Change Orders

ID	Name	Description
1464	EDB Processing Reports	There is a need to produce EDB processing reports.

3.8.31 BUY-5007-M -- EDB Entitlement Bypass

The EDB Entitlement Bypass report is an EDB processing report specific to the Commonwealth.

This report lists all members who were bypassed during EDB processing. Reasons may include members with duplicate SSNs, members with overlapping Medicare segments, or conversion issues. Also, 0's in the Begin Date field would constitute a member appearing on this Bypass report.

3.8.31.1 Technical Name

BUY-5007-M

3.8.31.2 EDB Entitlement Bypass Layout

```
Report  : BUY-5007-M                          COMMONWEALTH OF KENTUCKY                          Run Date: MM/DD/CCYY
Process : BUYJM523                          MEDICAID MANAGEMENT INFORMATION SYSTEM              Run Time:   99:99:99
Location: BUYPM523                           EDB/BUY-IN ENTITLEMENT BYPASS REPORT               Page:          999
                                                        MM/DD/CCYY

            ------------------------- EDB -------------------------
            --------- PART A ---------- --------- PART B ----------
MEDICAID ID PAYOR BEG DATE   END DATE   PAYOR BEG DATE   END DATE    HIC ID      MISC DATA     COMMENT
XXXXXXXXXX   XXX  MM/DD/CCYY MM/DD/CCYY  XXX  MM/DD/CCYY MM/DD/CCYY  XXXXXXXXXXX XXXXXXXXXXXXX XXXXXXXXXXXXXXXXXXXXXXXXXXXXXXXXXXXXXX
XXXXXXXXXX   XXX  MM/DD/CCYY MM/DD/CCYY  XXX  MM/DD/CCYY MM/DD/CCYY  XXXXXXXXXXX XXXXXXXXXXXXX XXXXXXXXXXXXXXXXXXXXXXXXXXXXXXXXXXXXXX
XXXXXXXXXX   XXX  MM/DD/CCYY MM/DD/CCYY  XXX  MM/DD/CCYY MM/DD/CCYY  XXXXXXXXXXX XXXXXXXXXXXXX XXXXXXXXXXXXXXXXXXXXXXXXXXXXXXXXXXXXXX
XXXXXXXXXX   XXX  MM/DD/CCYY MM/DD/CCYY  XXX  MM/DD/CCYY MM/DD/CCYY  XXXXXXXXXXX XXXXXXXXXXXXX XXXXXXXXXXXXXXXXXXXXXXXXXXXXXXXXXXXXXX
XXXXXXXXXX   XXX  MM/DD/CCYY MM/DD/CCYY  XXX  MM/DD/CCYY MM/DD/CCYY  XXXXXXXXXXX XXXXXXXXXXXXX XXXXXXXXXXXXXXXXXXXXXXXXXXXXXXXXXXXXXX
XXXXXXXXXX   XXX  MM/DD/CCYY MM/DD/CCYY  XXX  MM/DD/CCYY MM/DD/CCYY  XXXXXXXXXXX XXXXXXXXXXXXX XXXXXXXXXXXXXXXXXXXXXXXXXXXXXXXXXXXXXX

                                        ***   END OF REPORT   ***

                                        ***   NO DATA THIS RUN   ***
```

3.8.31.3 Field Descriptions

Field	Description	Length	Data Type	DB Table	DB Attributes
Comment	Optional comment on why record was processed.	40	Character	T_RE_PS2_ERR	TXN_LAYOUT (PARSED)
HIC	Health Insurance Claim number.	12	Character	T_RE_PS2_ERR	TXN_LAYOUT (PARSED)

Field	Description	Length	Data Type	DB Table	DB Attributes
Medicaid ID	Member identification number (Medicaid ID).	10	Number	T_RE_PS2_ERR	TXN_LAYOUT (PARSED)
Part A Beg Date	Beginning date for Part A coverage.	10	Character	T_RE_PS2_ERR	TXN_LAYOUT (PARSED)
Part A End Date	Ending date for Part A coverage.	10	Character	T_RE_PS2_ERR	TXN_LAYOUT (PARSED)
Part A Opt	Reason the member is entitled to Part A.	1	Character	T_RE_PS2_ERR	TXN_LAYOUT (PARSED)
Part A Payor	Part A payor code.	3	Character	T_RE_PS2_ERR	TXN_LAYOUT (PARSED)
Part B Beg Date	Beginning date for Part B coverage.	10	Character	T_RE_PS2_ERR	TXN_LAYOUT (PARSED)
Part B End Date	Ending date for Part B coverage.	10	Character	T_RE_PS2_ERR	TXN_LAYOUT (PARSED)
Part B Opt	Reason the member is entitled to Part B.	1	Character	T_RE_PS2_ERR	TXN_LAYOUT (PARSED)
Part B Payor	Part B payor code.	3	Character	T_RE_PS2_ERR	TXN_LAYOUT (PARSED)

3.8.31.4 Associated Programs

Program	Description
copy2crld	CRLD copy
buypm507	EDB Entitlement Bypass Report
copy2crld	CRLD copy
buypm523	EDB Entitlement Processing Reports

3.8.31.5 Associated Requirements

ID
30.090.001.004.6

3.8.31.6 Change Orders

ID	Name	Description
1464	EDB Processing Reports	There is a need to produce EDB processing reports.

3.8.32 BUY-5008-M -- EDB-HIC Cross Reference

The EDB-HIC Cross Reference is an EDB processing report specific to the Commonwealth.

This report is a cross-reference of HIC and SSN, with activity performed during this processing cycle.

3.8.32.1 Technical Name

BUY-5008-M

3.8.32.2 Sort Order

Medicaid ID

3.8.32.3 EDB-HIC Cross Reference Layout

```
Report  : BUY-5008-M                    COMMONWEALTH OF KENTUCKY                    Run Date: MM/DD/CCYY
Process : BUYJM508                 MEDICAID MANAGEMENT INFORMATION SYSTEM          Run Time:   99:99:99
Location: BUYPM508                 EDB-HIC CROSS-REFERENCE ACTIVITY REPORT         Page:          999
                                              MM/DD/CCYY

                ACTION    HIC         SEQ NUMBER   MEDICAID ID   HIC EFF DATE   HIC SOURCE
                XXXXXX    XXXXXXXXXX     XX        XXXXXXXXXX     MM/DD/CCYY        X
                XXXXXX    XXXXXXXXXX     XX        XXXXXXXXXX     MM/DD/CCYY        X
                XXXXXX    XXXXXXXXXX     XX        XXXXXXXXXX     MM/DD/CCYY        X
                XXXXXX    XXXXXXXXXX     XX        XXXXXXXXXX     MM/DD/CCYY        X
                XXXXXX    XXXXXXXXXX     XX        XXXXXXXXXX     MM/DD/CCYY        X
                XXXXXX    XXXXXXXXXX     XX        XXXXXXXXXX     MM/DD/CCYY        X
                XXXXXX    XXXXXXXXXX     XX        XXXXXXXXXX     MM/DD/CCYY        X
                XXXXXX    XXXXXXXXXX     XX        XXXXXXXXXX     MM/DD/CCYY        X
                XXXXXX    XXXXXXXXXX     XX        XXXXXXXXXX     MM/DD/CCYY        X

                                   ***   END OF REPORT   ***

                                   ***   NO DATA THIS RUN   ***
```

3.8.32.4 Field Descriptions

Field	Description	Length	Data Type	DB Table	DB Attributes
Action	Action performed on the cross-reference.	6	Character	N/A	CALCULATED
HIC	Medicare ID	10	Character	N/A	CALCULATED

Field	Description	Length	Data Type	DB Table	DB Attributes
HIC Eff Date	Effective date for the new HIC.	10	Character	N/A	CALCULATED
HIC Source	Transaction source.	1	Character	N/A	CALCULATED
Medicaid ID	Member identification number (Medicaid ID).	10	Character	N/A	CALCULATED
Seq Number	Sequence number as reported by CMS.	2	Character	N/A	CALCULATED

3.8.32.5 Associated Programs

Program	Description
copy2crld	CRLD copy
buypm508	EDB-HIC Cross Reference

3.8.32.6 Associated Requirements

ID
30.090.001.004.6

3.8.32.7 Change Orders

ID	Name	Description
506	EDB-HIC Cross-Reference Report	There is a need to duplicate the KYMR2400-R001 report.

3.8.33 BUY-5009-M -- EDB Entitlement Denied

The EDB Entitlement Denied report is an EDB processing report specific to the Commonwealth.

This report lists members who were denied Buy-In by CMS during EDB processing.

3.8.33.1 Technical Name

BUY-5009-M

3.8.33.2 EDB Entitlement Denied Layout

```
Report   : BUY-5009-M                          COMMONWEALTH OF KENTUCKY                          Run Date: MM/DD/CCYY
Process  : BUYJM523                          MEDICAID MANAGEMENT INFORMATION SYSTEM              Run Time:   99:99:99
Location: BUYPM523                            EDB/BUY-IN ENTITLEMENT DENIED REPORT               Page:          999
                                                        MM/DD/CCYY

            ------------------------- EDB -------------------------
            --------- PART A ---------- --------- PART B ----------
MEDICAID ID PAYOR BEG DATE   END DATE   PAYOR BEG DATE   END DATE    HIC ID      MISC DATA     COMMENT
XXXXXXXXXX   XXX  MM/DD/CCYY MM/DD/CCYY  XXX  MM/DD/CCYY MM/DD/CCYY  XXXXXXXXXXX XXXXXXXXXXXXX XXXXXXXXXXXXXXXXXXXXXXXXXXXXXXXXXXXXXXXX
XXXXXXXXXX   XXX  MM/DD/CCYY MM/DD/CCYY  XXX  MM/DD/CCYY MM/DD/CCYY  XXXXXXXXXXX XXXXXXXXXXXXX XXXXXXXXXXXXXXXXXXXXXXXXXXXXXXXXXXXXXXXX
XXXXXXXXXX   XXX  MM/DD/CCYY MM/DD/CCYY  XXX  MM/DD/CCYY MM/DD/CCYY  XXXXXXXXXXX XXXXXXXXXXXXX XXXXXXXXXXXXXXXXXXXXXXXXXXXXXXXXXXXXXXXX
XXXXXXXXXX   XXX  MM/DD/CCYY MM/DD/CCYY  XXX  MM/DD/CCYY MM/DD/CCYY  XXXXXXXXXXX XXXXXXXXXXXXX XXXXXXXXXXXXXXXXXXXXXXXXXXXXXXXXXXXXXXXX
XXXXXXXXXX   XXX  MM/DD/CCYY MM/DD/CCYY  XXX  MM/DD/CCYY MM/DD/CCYY  XXXXXXXXXXX XXXXXXXXXXXXX XXXXXXXXXXXXXXXXXXXXXXXXXXXXXXXXXXXXXXXX
XXXXXXXXXX   XXX  MM/DD/CCYY MM/DD/CCYY  XXX  MM/DD/CCYY MM/DD/CCYY  XXXXXXXXXXX XXXXXXXXXXXXX XXXXXXXXXXXXXXXXXXXXXXXXXXXXXXXXXXXXXXXX

                                         ***   END OF REPORT   ***

                                         ***   NO DATA THIS RUN   ***
```

3.8.33.3 Field Descriptions

Field	Description	Length	Data Type	DB Table	DB Attributes
Comment	Optional comment on why record was processed.	40	Character	T_RE_PS2_ERR	TXN_LAYOUT (PARSED)
HIC	Health Insurance Claim number.	12	Character	T_RE_PS2_ERR	TXN_LAYOUT (PARSED)
Medicaid ID	Member identification number (Medicaid ID).	10	Number	T_RE_PS2_ERR	TXN_LAYOUT (PARSED)

Field	Description	Length	Data Type	DB Table	DB Attributes
Part A Beg Date	Beginning date for Part A coverage.	10	Character	T_RE_PS2_ERR	TXN_LAYOUT (PARSED)
Part A End Date	Ending date for Part A coverage.	10	Character	T_RE_PS2_ERR	TXN_LAYOUT (PARSED)
Part A Opt	Reason the member is entitled to Part A.	1	Character	T_RE_PS2_ERR	TXN_LAYOUT (PARSED)
Part A Payor	Part A payor code.	3	Character	T_RE_PS2_ERR	TXN_LAYOUT (PARSED)
Part B Beg Date	Beginning date for Part B coverage.	10	Character	T_RE_PS2_ERR	TXN_LAYOUT (PARSED)
Part B End Date	Ending date for Part B coverage.	10	Character	T_RE_PS2_ERR	TXN_LAYOUT (PARSED)
Part B Opt	Reason the member is entitled to Part B.	1	Character	T_RE_PS2_ERR	TXN_LAYOUT (PARSED)
Part B Payor	Part B payor code.	3	Character	T_RE_PS2_ERR	TXN_LAYOUT (PARSED)

3.8.33.4 Associated Programs

Program	Description
copy2crld	CRLD copy
buypm509	EDB Entitlement Denied Report
copy2crld	CRLD copy
buypm523	EDB Entitlement Processing Reports

3.8.33.5 Associated Requirements

ID
30.090.001.004.6

3.8.33.6 Change Orders

ID	Name	Description
1464	EDB Processing Reports	There is a need to produce EDB processing reports.

3.8.34 Buy-In Report Header -- Buy-In Report Standard Header

This is the standard header to be used on all Buy-In reports.

3.8.34.1 Technical Name

Buy-In Report Header

3.8.34.2 Sort Order

N/A – Displays standard header format of report

3.8.34.3 Buy-In Report Standard Header Layout

```
Report  : BUY-XXXX-M                    COMMONWEALTH OF KENTUCKY                    Run Date: MM/DD/CCYY
Process : BUYXXXXX                  MEDICAID MANAGEMENT INFORMATION SYSTEM          Run Time:   99:99:99
Location: BUYXXXXX                      XXXXXXXXXXXXXXXXXXXXXXXXXXXXX               Page:            999
                                                MM/DD/CCYY

                                        ***   END OF REPORT   ***

                                        ***   NO DATA THIS RUN   ***
```

3.8.34.4 Field Descriptions

Field	Description	Length	Data Type	DB Table	DB Attributes
N/A					

3.8.34.5 Associated Programs

Program	Description
No associated Programs found.	

3.8.34.6 Associated Requirements

ID
30.090.001.001.2

3.8.34.7 Change Orders

ID	Name	Description
458	Use Standard Report Headings	There is a need to modify the standard Buy-In reports to use the Kentucky headings.

3.8.35 ELG-0152-M -- EDB Missing Sequence Number

This report lists members transmitted to CMS on the monthly finder file, but not returned on the EDB database.

3.8.35.1 Technical Name

ELG-0152-M

3.8.35.2 Sort Order

Seq Number

3.8.35.3 EDB Missing Sequence Number Layout

```
Report  : ELG-0152-M                    COMMONWEALTH OF KENTUCKY                    Run Date: MM/DD/CCYY
Process : ELGJM150                  MEDICAID MANAGEMENT INFORMATION SYSTEM          Run Time:   99:99:99
Location: ELGPM152                   EDB MISSING SEQUENCE NUMBER ERPORT             Page:           999
                                              MM/DD/CCYY

                                SSN        REQ  SEQ NUM
                                999999999  XX   9999999999999
                                999999999  XX   9999999999999
                                999999999  XX   9999999999999
                                999999999  XX   9999999999999
                                999999999  XX   9999999999999
                                999999999  XX   9999999999999
                                999999999  XX   9999999999999


                                ***   END OF REPORT   ***


                                ***   NO DATA THIS RUN   ***
```

3.8.35.4 Field Descriptions

Field	Description	Length	Data Type	DB Table	DB Attributes
Req	State identifier from the finder file (should always be "KY").	3	Character	N/A	Input File
SSN	Social Security number of the member as listed on the finder file.	9	Character	N/A	Input File
Seq Num	Record sequence number, stored in the MISC_DATA field of the finder file.	13	Number	N/A	Input File

3.8.35.5 Associated Programs

Program	Description
No associated Programs found.	

3.8.35.6 Associated Requirements

ID
30.090.001.004.6

3.8.35.7 Change Orders

ID	Name	Description
1156	EDB Missing Sequence Report	There is a need to report records sent to CMS in the finder file that are not returned in the EDB database.

3.8.36 ELG-0650-M -- Part D MMA File Error

This report prints the list of records from CMS that experience errors during processing.

3.8.36.1 Technical Name

ELG-0650-M

3.8.36.2 Sort Order

Member ID

3.8.36.3 Part D MMA File Error Layout

```
Report   : ELG-0650-M                    COMMONWEALTH OF KENTUCKY                          Run Date: MM/DD/CCYY
Process  : ELGJM650                 MEDICAID MANAGEMENT INFORMATION SYSTEM                 Run Time:   HH:MM:SS
Location: ELGPM650                   MEDICARE PART D MMA FILE ERROR REPORT                     Page:     99,999
                                                 MM/DD/CCYY

                                                                  BENEFIT  DATE OF  MCARE
NAME                              MEDICAID ID  MEDICARE ID   SSN  MONTH    BIRTH    A/B   REJECT REASON

XXXXXXXXXXXXXXXXXXXXXXXXXXXXXXXXXX XXXXXXXXXXXX XXXXXXXXXXXX 999999999 99999999 99999999 XXX XXXXXXXXXXXXXXXXXXXXXXXXXXXXXXXXXXXX
XXXXXXXXXXXXXXXXXXXXXXXXXXXXXXXXXX XXXXXXXXXXXX XXXXXXXXXXXX 999999999 99999999 99999999 XXX XXXXXXXXXXXXXXXXXXXXXXXXXXXXXXXXXXXX
XXXXXXXXXXXXXXXXXXXXXXXXXXXXXXXXXX XXXXXXXXXXXX XXXXXXXXXXXX 999999999 99999999 99999999 XXX XXXXXXXXXXXXXXXXXXXXXXXXXXXXXXXXXXXX
XXXXXXXXXXXXXXXXXXXXXXXXXXXXXXXXXX XXXXXXXXXXXX XXXXXXXXXXXX 999999999 99999999 99999999 XXX XXXXXXXXXXXXXXXXXXXXXXXXXXXXXXXXXXXX
XXXXXXXXXXXXXXXXXXXXXXXXXXXXXXXXXX XXXXXXXXXXXX XXXXXXXXXXXX 999999999 99999999 99999999 XXX XXXXXXXXXXXXXXXXXXXXXXXXXXXXXXXXXXXX
XXXXXXXXXXXXXXXXXXXXXXXXXXXXXXXXXX XXXXXXXXXXXX XXXXXXXXXXXX 999999999 99999999 99999999 XXX XXXXXXXXXXXXXXXXXXXXXXXXXXXXXXXXXXXX
XXXXXXXXXXXXXXXXXXXXXXXXXXXXXXXXXX XXXXXXXXXXXX XXXXXXXXXXXX 999999999 99999999 99999999 XXX XXXXXXXXXXXXXXXXXXXXXXXXXXXXXXXXXXXX
XXXXXXXXXXXXXXXXXXXXXXXXXXXXXXXXXX XXXXXXXXXXXX XXXXXXXXXXXX 999999999 99999999 99999999 XXX XXXXXXXXXXXXXXXXXXXXXXXXXXXXXXXXXXXX

     TOTAL RECORDS: 999,999


                                   ** NO DATA THIS RUN **
```

3.8.36.4 Field Descriptions

Field	Description	Length	Data Type	DB Table	DB Attributes
Benefit Month	Month of benefit from CMS record.	8	Date (MM/DD/CCYY)	N/A	N/A
Date of Birth	Member date of birth from CMS record.	8	Date (MM/DD/CCYY)	N/A	N/A

Field	Description	Length	Data Type	DB Table	DB Attributes
MCare A/B	Source of eligibility.	3	Char	N/A	N/A
Medicaid ID	Medicaid ID of member from CMS record.	12	Character	N/A	N/A
Medicare ID	Medicare ID of member from CMS record.	12	Character	N/A	N/A
Name	Concatenated last and first name from CMS record.	30	Character	N/A	N/A
Reject reason	Reason record was rejected.	30	Character	T_BATCH_ERR_MSG	DSC_MESSAGE
SSN	Member SSN from CMS record.	9	Character	N/A	N/A

3.8.36.5 Associated Programs

Program	Description
No associated Programs found.	

3.8.36.6 Associated Requirements

ID
No associated Requirements found.

3.8.36.7 Change Orders

ID	Name	Description
2468	Part D - Standard Report Text	There is a need to adapt the base Part D reports to Kentucky specifications.

3.8.37 ELG-0651-M -- Part D MMA Inbound

This report lists the transactions rejected by CMS.

3.8.37.1 Technical Name

ELG-0651-M

3.8.37.2 Sort Order

Medicare ID

3.8.37.3 Part D MMA Inbound Layout

```
Report  : ELG-0651-M                    COMMONWEALTH OF KENTUCKY                    Run Date: MM/DD/CCYY
Process : ELGJM651                MEDICAID MANAGEMENT INFORMATION SYSTEM            Run Time:   HH:MM:SS
Location: ELGPM651                MEDICARE PART D MMA CMS RESPONSE REPORT               Page:     99,999
                                            MM/DD/CCYY

                                                  RECORD     REJECTION  ERROR
 NAME                          MEDICARE ID   SSN  INDICATOR  CODE       DESCRIPTION

 XXXXXXXXXXXXXXXXXXXXXXXXXXXXX XXXXXXXXXXX XXXXXXXXX  X         X        XXXXXXXXXXXXXXXXXXXXXXXXXXXXXXXXXXXXXXXXXXXXXXXXXXXXXXXX
 XXXXXXXXXXXXXXXXXXXXXXXXXXXXX XXXXXXXXXXX XXXXXXXXX  X         X        XXXXXXXXXXXXXXXXXXXXXXXXXXXXXXXXXXXXXXXXXXXXXXXXXXXXXXXX
 XXXXXXXXXXXXXXXXXXXXXXXXXXXXX XXXXXXXXXXX XXXXXXXXX  X         X        XXXXXXXXXXXXXXXXXXXXXXXXXXXXXXXXXXXXXXXXXXXXXXXXXXXXXXXX
 XXXXXXXXXXXXXXXXXXXXXXXXXXXXX XXXXXXXXXXX XXXXXXXXX  X         X        XXXXXXXXXXXXXXXXXXXXXXXXXXXXXXXXXXXXXXXXXXXXXXXXXXXXXXXX
 XXXXXXXXXXXXXXXXXXXXXXXXXXXXX XXXXXXXXXXX XXXXXXXXX  X         X        XXXXXXXXXXXXXXXXXXXXXXXXXXXXXXXXXXXXXXXXXXXXXXXXXXXXXXXX
 XXXXXXXXXXXXXXXXXXXXXXXXXXXXX XXXXXXXXXXX XXXXXXXXX  X         X        XXXXXXXXXXXXXXXXXXXXXXXXXXXXXXXXXXXXXXXXXXXXXXXXXXXXXXXX
 XXXXXXXXXXXXXXXXXXXXXXXXXXXXX XXXXXXXXXXX XXXXXXXXX  X         X        XXXXXXXXXXXXXXXXXXXXXXXXXXXXXXXXXXXXXXXXXXXXXXXXXXXXXXXX

     TOTAL RECORDS:     999999

                                        ** END OF REPORT **
```

3.8.37.4 Field Descriptions

Field	Description	Length	Data Type	DB Table	DB Attributes
Error Description	This is the error message.	50	Character	T_BATCH_ERR_MSG	DSC_MESSAGE
Medicare ID	This is the member's Medicare ID.	12	Character	T_RE_HIB	ID_MEDICARE

Field	Description	Length	Data Type	DB Table	DB Attributes
Name	This is the concatenated last name and first name.	25	Character	T_RE_BASE	NAM_LAST, NAM_FIRST
Record Indicator	This indicates if the record was rejected.	1	Character	T_RE_CMS_MMA_ENROLL	IND_REC_REJC
Rejection Code	This gives the rejection code.	6	Character	T_RE_CMS_MMA_ENROLL	CDE_REC_REJC
SSN	This is the member's SSN.	9	Character	T_RE_BASE	NUM_SSN
Total Records	This is the number of rejected records.	6	Number	N/A	Calculated

3.8.37.5 Associated Programs

Program	Description
No associated Programs found.	

3.8.37.6 Associated Requirements

ID
No associated Requirements found.

3.8.37.7 Change Orders

ID	Name	Description
2468	Part D - Standard Report Text	There is a need to adapt the base Part D reports to Kentucky specifications.

3.8.38 ELG-0652-M -- Part D MMA Outbound

This report is the transaction detail for transactions in the monthly transmission to CMS.

3.8.38.1 Technical Name

ELG-0652-M

3.8.38.2 Sort Order

Medicare ID

3.8.38.3 Part D MMA Outbound Layout

```
Report  : ELG-0652-M                    COMMONWEALTH OF KENTUCKY                          Run Date: MM/DD/CCYY
Process : ELGJM652                  MEDICAID MANAGEMENT INFORMATION SYSTEM                Run Time:   HH:MM:SS
Location: ELGPM652                MEDICARE PART D MMA ENROLLMENT OUTBOUND REPORT              Page:     99,999
                                              MM/DD/CCYY

                                                                EFFECTIVE     END         DATE
     NAME                         MEDICARE ID          SSN     DATE          DATE        SENT

     XXXXXXXXXXXXXXXXXXXXXXXXXX   XXXXXXXXXXXX       999999999   MM/DD/CCYY    MM/DD/CCYY  MM/DD/CCYY
     XXXXXXXXXXXXXXXXXXXXXXXXXX   XXXXXXXXXXXX       999999999   MM/DD/CCYY    MM/DD/CCYY  MM/DD/CCYY
     XXXXXXXXXXXXXXXXXXXXXXXXXX   XXXXXXXXXXXX       999999999   MM/DD/CCYY    MM/DD/CCYY  MM/DD/CCYY
     XXXXXXXXXXXXXXXXXXXXXXXXXX   XXXXXXXXXXXX       999999999   MM/DD/CCYY    MM/DD/CCYY  MM/DD/CCYY
     XXXXXXXXXXXXXXXXXXXXXXXXXX   XXXXXXXXXXXX       999999999   MM/DD/CCYY    MM/DD/CCYY  MM/DD/CCYY
     XXXXXXXXXXXXXXXXXXXXXXXXXX   XXXXXXXXXXXX       999999999   MM/DD/CCYY    MM/DD/CCYY  MM/DD/CCYY
     XXXXXXXXXXXXXXXXXXXXXXXXXX   XXXXXXXXXXXX       999999999   MM/DD/CCYY    MM/DD/CCYY  MM/DD/CCYY

     TOTAL RECORDS:    999,999

                                        ** END OF REPORT
```

3.8.38.4 Field Descriptions

Field	Description	Length	Data Type	DB Table	DB Attributes
Name	This is the concatenated last name and first name.	25	Character	T_RE_CMS_MMA_ENROLL	NAM_LAST, NAM_FIRST
Date Sent	Date sent to CMS.	8	Date (CCYY/MM/DD)	T_RE_CMS_MMA_ENROLL	DTE_SENT

Field	Description	Length	Data Type	DB Table	DB Attributes
Effective Date	Date enrollment is effective.	8	Date (CCYY/MM/DD)	T_RE_CMS_MMA_ENROLL	DTE_EFFECTIVE
End Date	Date enrollment is to end.	8	Date (CCYY/MM/DD)	T_RE_CMS_MMA_ENROLL	DTE_END
Medicare ID	This is the member's Medicare ID.	12	Character	T_RE_CMS_MMA_ENROLL	ID_MEDICARE
SSN	Member's SSN.	9	Character	T_RE_CMS_MMA_ENROLL	NUM_SSN
Total Records:	Number of records sent.	6	Number	N/A	Calculated

3.8.38.5 Associated Programs

Program	Description
elgpm670	Part D PDP Errors report
copy2routedir	Copy Reports to Router

3.8.38.6 Associated Requirements

ID
No associated Requirements found.

3.8.38.7 Change Orders

ID	Name	Description
2468	Part D - Standard Report Text	There is a need to adapt the base Part D reports to Kentucky specifications.

3.8.39 ELG-0655-M -- Part D Liability

This report is a summary of the Part D Clawback charges.

3.8.39.1 Technical Name

ELG-0655-M

3.8.39.2 Sort Order

Dual Status

3.8.39.3 Part D Liability Layout

```
Report  : ELG-0655-M                          InterChange MMIS                          Run Date: MM/DD/CCYY
Process : ELGJM655                            Reporting System                          Run Time:   99:99:99
Location: ELGPM655                          PART D LIABILITY REPORT                     Page:            999
                                                  MM/CCYY

COMBINED LIABILITY CHARGES BASED ON ENROLLMENT COUNTS
         DUAL STATUS   ENROLLMENT COUNT      RATE           TOTAL
            02                 999,999    999.99   99,999,999.99
            04                 999,999    999.99   99,999,999.99
            08                 999,999    999.99   99,999,999.99

                                TOTAL CHARGES:    999,999,999.99


COMBINED CREDITS BASED ON ENROLLMENT COUNTS
         DUAL STATUS   ENROLLMENT COUNT      RATE           TOTAL
            02                 999,999    999.99   99,999,999.99
            04                 999,999    999.99   99,999,999.99
            08                 999,999    999.99   99,999,999.99

                                TOTAL CREDITS:    999,999,999.99


                          *** END OF REPORT ***

                        *** NO DATA THIS RUN ***
```

3.8.39.4 Field Descriptions

Field	Description	Length	Data Type	DB Table	DB Attributes
Bill Cycle (Enrollment)	This is the month and year of the billing cycle.	6	Date (MM/CCYY)	T_RE_CLAWBACK	DTE_CREATED
Bill Cycle (Rate changes)	This is the month and year of the billing cycle.	6	Date (MM/CCYY)	T_RE_CLAWBACK	DTE_CREATED
Combined Liability from Enrollment Counts	This is the amount of financial liability from enrollment.	11	Number	N/A	Calculated
Combined Liability from Monthly Rate Change	This is the amount of financial liability from rate changes.	11	Number	N/A	Calculated
Disenrollment Count	The number of members removed in the billing cycle.	6	Number	N/A	Calculated
Enrollment Billed	The number of members in the billing cycle that were billed for.	6	Number	N/A	Calculated
Enrollment Count	The number of members enrolled in the billing cycle.	6	Number	N/A	Calculated
Net	The difference between the old rate and new rate.	6	Number	N/A	Calculated
New Rate	The rate the members were adjusted to.	5	Number	N/A	Calculated
Old Rate	The rate the members were originally billed at.	5	Number	N/A	Calculated

Field	Description	Length	Data Type	DB Table	DB Attributes
Rate	This is the monthly charge.	5	Number	T_RE_CLAWBACK	AMT_CLAWBACK
Total (Enrollment)	Total liability for the billing cycle.	10	Number	N/A	Calculated
Total (Rate Change)	The total liability for the rate change.	10	Number	N/A	Calculated

3.8.39.5 Associated Programs

Program	Description
No associated Programs found.	

3.8.39.6 Associated Requirements

ID
No associated Requirements found.

3.8.39.7 Change Orders

ID	Name	Description
2641	New report ELG-0655-M	There is a need to produce a Clawback summary report. DCR 01458/CO 251

3.8.40 ELG-0660-M -- Part D Reconciliation

This report details the reconciliation process.

3.8.40.1 Technical Name

ELG-0660-M

3.8.40.2 Sort Order

Medicaid ID

3.8.40.3 Part D Reconciliation Layout

```
Report  : ELG-0660-M                    COMMONWEALTH OF KENTUCKY                          Run Date: MM/DD/CCYY
Process : ELGJM650                 MEDICAID MANAGEMENT INFORMATION SYSTEM                 Run Time:   HH:MM:SS
Location: ELGPM660               MEDICARE PART D ENTITLEMENT RECONCILE REPORT                 Page:     99,999
                                              MM/DD/CCYY

                                                                DATE OF     MMIS PART D   CMS PART D    SYSTEM
NAME                            MEDICAID ID  MEDICARE ID   SSN  BIRTH       ENTITLEMENT   ENTITLEMENT   UPDATED

XXXXXXXXXXXXXXXXXXXXXXXXXXXXXX  XXXXXXXXXXX  XXXXXXXXXXXX  XXXXXXXXX  MM/DD/CCYY  MM/DD/CCYY   MM/DD/CCYY    XXX
XXXXXXXXXXXXXXXXXXXXXXXXXXXXXX  XXXXXXXXXXX  XXXXXXXXXXXX  XXXXXXXXX  MM/DD/CCYY  MM/DD/CCYY   MM/DD/CCYY    XXX
XXXXXXXXXXXXXXXXXXXXXXXXXXXXXX  XXXXXXXXXXX  XXXXXXXXXXXX  XXXXXXXXX  MM/DD/CCYY  MM/DD/CCYY   MM/DD/CCYY    XXX
XXXXXXXXXXXXXXXXXXXXXXXXXXXXXX  XXXXXXXXXXX  XXXXXXXXXXXX  XXXXXXXXX  MM/DD/CCYY  MM/DD/CCYY   MM/DD/CCYY    XXX
XXXXXXXXXXXXXXXXXXXXXXXXXXXXXX  XXXXXXXXXXX  XXXXXXXXXXXX  XXXXXXXXX  MM/DD/CCYY  MM/DD/CCYY   MM/DD/CCYY    XXX
XXXXXXXXXXXXXXXXXXXXXXXXXXXXXX  XXXXXXXXXXX  XXXXXXXXXXXX  XXXXXXXXX  MM/DD/CCYY  MM/DD/CCYY   MM/DD/CCYY    XXX

TOTAL RECORDS: 999,999

                                        ** NO DATA THIS RUN **
```

3.8.40.4 Field Descriptions

Field	Description	Length	Data Type	DB Table	DB Attributes
CMS Part D Entitlement	Date of enrollment from CMS.	8	Date (MM/DD/CCYY)	N/A	N/A
Date of Birth	Member date of birth from CMS record.	8	Date (MM/DD/CCYY)	N/A	N/A
HIC Number	Medicare ID of member from CMS record.	12	Character	N/A	N/A

Field	Description	Length	Data Type	DB Table	DB Attributes
MMIS Part D Entitlement	Date of enrollment in iC.	8	Date (MM/DD/CCYY)	N/A	N/A
Medicaid ID	Medicaid ID of member from CMS record.	12	Character	N/A	N/A
Name	Concatenated last and first name from CMS record.	30	Character	N/A	N/A
SSN	Member SSN from CMS record.	9	Character	N/A	N/A
System Updated	Indicates if the system is updated.	3	Character	N/A	N/A

3.8.40.5 Associated Programs

Program	Description
No associated Programs found.	

3.8.40.6 Associated Requirements

ID
No associated Requirements found.

3.8.40.7 Change Orders

ID	Name	Description
2468	Part D - Standard Report Text	There is a need to adapt the base Part D reports to Kentucky specifications.

3.8.41 ELG-0670-M -- Part D Missing PDP Assignments

This report prints the members without valid PDP assignments.

3.8.41.1 Technical Name

ELG-0670-M

3.8.41.2 Sort Order

PDP Contract ID, PDP Plan ID

3.8.41.3 Part D Missing PDP Assignments Layout

```
Report  : ELG-0670-M                    COMMONWEALTH OF KENTUCKY                    Run Date: MM/DD/CCYY
Process : ELGJM650                MEDICAID MANAGEMENT INFORMATION SYSTEM            Run Time:   HH:MM:SS
Location: ELGPM670                MEDICARE PART D PDP/PLAN ERROR REPORT             Page:        99,999
                                            MM/DD/CCYY

          PDP          PDP      ASSIGNMENT  ASSIGNMENT                          DATE OF
          CONTRACT ID  PLAN ID  START DATE  END DATE    MEDICAID ID     SSN     BIRTH

          XXXXX        XXX      MM/DD/CCYY  MM/DD/CCYY  XXXXXXXXXXXX    999999999  MM/DD/CCYY
          XXXXX        XXX      MM/DD/CCYY  MM/DD/CCYY  XXXXXXXXXXXX    999999999  MM/DD/CCYY
          XXXXX        XXX      MM/DD/CCYY  MM/DD/CCYY  XXXXXXXXXXXX    999999999  MM/DD/CCYY
          XXXXX        XXX      MM/DD/CCYY  MM/DD/CCYY  XXXXXXXXXXXX    999999999  MM/DD/CCYY
          XXXXX        XXX      MM/DD/CCYY  MM/DD/CCYY  XXXXXXXXXXXX    999999999  MM/DD/CCYY
          XXXXX        XXX      MM/DD/CCYY  MM/DD/CCYY  XXXXXXXXXXXX    999999999  MM/DD/CCYY
          XXXXX        XXX      MM/DD/CCYY  MM/DD/CCYY  XXXXXXXXXXXX    999999999  MM/DD/CCYY
          XXXXX        XXX      MM/DD/CCYY  MM/DD/CCYY  XXXXXXXXXXXX    999999999  MM/DD/CCYY

   TOTAL NUMBER OF ASSIGNMENTS NOT ADDED:   999,999
```

3.8.41.4 Field Descriptions

Field	Description	Length	Data Type	DB Table	DB Attributes
Assignment End Date	Ending date of PDP assignment.	8	Date (MM/DD/CCYY)	N/A	N/A
Assignment Start Date	Starting date of PDP assignment.	8	Date (MM/DD/CCYY)	N/A	N/A
Date of Birth	Member date of birth from CMS record.	8	Date (MM/DD/CCYY)	N/A	N/A

Field	Description	Length	Data Type	DB Table	DB Attributes
Medicaid ID	Medicaid ID of member from CMS record.	12	Character	N/A	N/A
PCP Contract ID	PDP contract ID number.	5	Character	N/A	N/A
PDP Plan ID	PDP plan ID number.	3	Character	N/A	N/A
SSN	Member SSN from CMS record.	9	Character	N/A	N/A

3.8.41.5 Associated Programs

Program	Description
No associated Programs found.	

3.8.41.6 Associated Requirements

ID
No associated Requirements found.

3.8.41.7 Change Orders

ID	Name	Description
2468	Part D - Standard Report Text	There is a need to adapt the base Part D reports to Kentucky specifications.

3.9 Letters

The Buy-In Data Maintenance subsystem does not produce or send any letters.

3.10 Internal and External Interfaces

This section provides a listing of all of the internal and external interfaces that have been identified for the system. These interfaces include legacy and new interfaces as well as interfaces to takeover systems.

3.10.1 External Files

This folder contains a link to the file layouts of the external files in this subsystem.

Entities	
CMS	Center for Medicare and Medicaid Services
HMS	Health Management Systems (formerly PCG)

3.10.2 Input Files

Interface ID	File Name	Entity	Frequency
784	Medicare Part A Billing File	HMS	Monthly
788	Medicare Part B Billing File	HMS	Monthly
568	Eligibility Database File (EDB)	HMS	Monthly

3.10.3 Output Files

Interface ID	File Name	Entity	Frequency	Subsystem
555	Medicare Part A “Input” File	CMS	Monthly	Buy-In
557	Medicare Part B “Input” File	CMS	Monthly	Buy-In

3.10.4 File Layouts

The following file layouts are included below:

- Buy-In New CMS Layouts;
- CMS EDB File Layout;
- EDS EDB File Layout;
- KMAA Extract File;
- Part D MMA Enrollment File (old version);
- Part D MMA Enrollment File;

- Part D MMA Enrollment Response File (old version);
- Part D MMA Enrollment Response File;
- HMS Modified CMS Layouts; and,
- Record Layout – EDB Finder File.

3.10.5 Buy-In New CMS Layouts

3.10.5.1 STATE AGENCY TO CMS

FIELD NUMBER	POSITION FIELD	NAME	NUMBER OF POSITIONS
1	1-12	Medicare Claim Number	12
2	13-36	Surname	24
3	37-51	Given Name	15
4	52	Middle Initial	1
5	53	Sex Code	1
6	54-61	Date of Birth (CCYYMMDD)	8
7	62-70	Beneficiary's Social Security Number	9
8	71-72	Buy-In Eligibility	2
9	73-75	Agency Code	3
10	76-77	Transaction Code	2
11	78-82	Filler	5
12	83-88	Transaction Effective Date (CCYYMM)	6
13	89-94	Code 75 Stop Date (CCYYMM)	6
14	95-100	Filler	6
15	101-120	Agency Client Identification Number	20

Explanation of Fields:

4. MEDICARE CLAIM NUMBER (Positions 1-12)--The claim number must consist of a nine-position social security number or pseudo social security claim number (if the beneficiary is entitled under a railroad retirement claim number) followed by an alphanumeric beneficiary identification code (BIC). Positions 11 and 12 may be blank.

5. SURNAME (Positions 13-36)--Enter a maximum of twenty-four alphanumeric characters. Leave blank any position that contains a blank as a normal part of a compound surname. Separate designations such as Jr., Sr., II, or III from the surname with a single blank space. Leave blank any position that contains a special character as the apostrophe, hyphen, or period as a normal part of the surname.

6. GIVEN NAME (Positions 37-51)--Enter a maximum of fifteen alphanumeric characters. Apply the same format considerations as apply to the surname. Leave blank any positions that are not required.

7. MIDDLE INITIAL (Position 52)--Enter a one position alphanumeric character. Leave field blank if middle initial is unknown.

8. SEX CODE (Position 53)--Enter a one position code "M" male, "F" female. Leave field blank if unknown.

9. DATE OF BIRTH CCYYMMDD (Positions 54-61)--Enter an eight position numeric date, for example, enter November 1,1909 as 19091101.

10. BENEFICIARY'S SOCIAL SECURITY NUMBER (Positions 62-70)--Enter the beneficiary's own social security number if known. If unknown, leave blank.

11. BUY-IN ELIGIBILITY CODE (Positions 71-72)--Enter, in position 71, a one position alphabetic code which describes the reason the beneficiary is eligible for buy-in. Position 72 is reserved for future expansion.

12. AGENCY CODE (Positions 73-75)--Enter the three position alphanumeric or numeric code of the entity which has jurisdiction over the account. Without this code the transaction may be lost.

13. TRANSACTION CODE (Positions 76-77)--Enter the two position numeric code which identifies the type of record conveyed by the transaction.

14. FILLER (Positions 78-82)--Positions reserved for future use.

15. TRANSACTION EFFECTIVE DATE CCYYMM (Positions 83-88)--Enter the date on which the accretion or deletion action is effective, for example, enter April 1999 as 199904.

16. CODE 75 STOP DATE CCYYMM (Positions 89-94)--This field is used only in conjunction with a closed period of buy-in coverage. Enter the date on which the closed period of buy-in coverage ended, for example, enter June 1998 as 199806.

17. FILLER (Positions 95-100)--Positions reserved for future use.

18. AGENCY CLIENT IDENTIFICATION NUMBER (Positions 101-120)--Enter the beneficiary's State welfare identification number or any other identifier of the State's

choice. Any combination of not more than 20 alphanumeric characters may be used. Packed fields are not acceptable.

3.10.5.2 STATE AGENCY SSI ALERT RECORD (RIC A)

Field number	Position	Field name	Number of positions
1.	1 - 12	Medicare Claim Number	12
2.	13 - 36	Surname	24
3.	37 - 51	Given Name	15
4.	52	Middle Initial	1
5.	53	Sex Code	1
6.	54 - 61	Date of Birth (CCYYMMDD)	8
7.	62 - 70	Beneficiary's Social Security Number	9
8.	71 - 72	Buy-In Eligibility Code	2
9.	73 - 75	Agency Code	3
10.	76	Record Identification Code "A"	1
11.	77 - 78	Transaction Code	2
12.	79 - 81	Filler	3
13.	82 - 87	SSI Start Date (CCYYMM)	6
14.	88 - 93	SSI Stop Date (CCYYMM)	6
15.	94 - 99	Medicare Entitlement Date (CCYYMM)	6
16.	100 - 126	Filler	27
17.	127 - 135	ZIP Code of Residence	9
18.	136 - 138	County Code of Residence	3
19.	139	SSI Living Arrangement Code	1
20.	140	SSI Status Code (SISC)	1

Field number	Position	Field name	Number of positions
21.	141 – 160	Filler	20

EXPLANATION OF FIELDS:

19. MEDICARE CLAIM NUMBER (Positions 1-12)--A nine position social security claim number (or pseudo social security claim number if the beneficiary is entitled under a RRB number) followed by an alphanumeric beneficiary identification code (BIC). Positions 11 and 12 may be blank. This field conveys the Medicare claim number from the EDB.

20. SURNAME (Positions 13-36)--A maximum of twenty-four alphanumeric characters. The name matches the surname on the EDB. Any unused positions are blank.

21. GIVEN NAME (Positions 37-51)--A maximum of fifteen alphabetic characters. The name matches the given name on the EDB. Any unused positions are blank.

22. MIDDLE INITIAL (Position 52)--An alphabetic character. If the beneficiary's middle initial is not reflected on the EDB, the field is blank.

23. SEX CODE (Position 53)--A one position alpha code (male “M”, female “F”)

24. DATE OF BIRTH CCYYMMDD (Positions 54-61)--An eight position numeric field. A date such as November 1, 1909 is displayed as 19091101. The date of birth matches the date of birth on the EDB.

25. BENEFICIARY’S SOCIAL SECURITY NUMBER (Positions 62-70)--A nine position numeric field. The SSN is extracted from the EDB.

26. BUY-IN ELIGIBILITY CODE (Positions 71-72)--A one position alphabetic code that describes the reason the beneficiary is eligible for SSI benefits. An additional position (position 72) has been allocated for expansion.

27. AGENCY CODE (Positions 73-75)--A three position alphanumeric code that is based on the State code which appears in the SSI record furnished by SSA.

28. RECORD IDENTIFICATION CODE (Position 76)—“A” constant. The “A” identifies this record as an SSI alert record.

29. TRANSACTION CODE (Positions 77-78)--Positions 77 and 78 contain an “86” for an SSI accretion alert record or an “87” for an SSI deletion alert record. Positions 79 and 80 are blank.

30. FILLER (Position 79-81)--Positions reserved for future use.

31. SSI START DATE CCYYMM (Positions 82-87)--A six position numeric field which contains beginning date (year and month) of the most recent period of SSI entitlement. SSA furnishes this date for code 86 records.

32. SSI STOP DATE CCYYMM (Positions 88-93)--A six position numeric field which contains the ending date (year and month) of the last period of SSI entitlement. SSA furnishes this date for code 87 records.

33. MEDICARE ENTITLEMENT DATE CCYYMM (Positions 94-99) --A six position numeric field which indicates the year and month in which the beneficiary attained age 65 or became entitled to Medicare Part A. This date is provided to assist the State in determining the effective date for buy-in coverage. This field is applicable to accretion alert records only.

34. FILLER (Positions 100-126--Positions reserved for future use.

35. ZIP CODE OF RESIDENCE (Positions 127-135)--A nine position numeric code that is reflected on the EDB. If the EDB only reflects the five-position zip code, that is reflected and the remaining positions are blank.

36. COUNTY CODE OF RESIDENCE (Positions 136-138)--A three position code developed from the SSI record. SSA furnishes this code.

37. SSI LIVING ARRANGEMENT CODE (Position 139)--A one position alphabetic code of “D” which indicates that the beneficiary is a resident of a title XIX institution. This field may be blank.

38. SSI STATUS CODE (SISC) (Position 140)--A one position alphabetic code which describes the beneficiary's SSI status.

39. FILLER (Positions 141-160)--Positions reserved for future use.

3.10.5.3 Part A State Agency Billing Record (RIC B)

Field number	Position	Field name	Number of positions
1.	1 - 12	Medicare Claim Number	12
2.	13 - 36	Surname	24
3.	37 - 51	Given Name	15
4.	52	Middle Initial	1
5.	53	Sex Code	1
6.	54 - 61	Date of Birth (CCYYMMDD)	8
7.	62 - 70	Beneficiary’s Social Security Number	9
8.	71	Reduced Part A Indicator	1
9.	72	Part A Premium Surcharge Indicator	1
10.	73 - 75	Agency Code	3
11.	76	Record Identification Code “B”	1

Field number	Position	Field name	Number of positions
12.	77 - 80	Transaction Code	4
13.	81	Transaction Sub-code	1
14.	82 - 87	Billing Period Start Date (CCYYMM)	6
15.	88 - 93	Billing Period Stop Date (CCYYMM)	6
16.	94 - 101	Premium Amount Due or Refund ($$$$$$$¢¢)	8
17.	102 - 107	Bill Date (CCYYMM)	6
18.	108 - 113	Current Monthly Premium Rate ($$$$¢¢)	6
19.	114 - 116	Filler	3
20.	117	Credit Indicator	1
21.	118 – 126	Filler	9
22.	127 - 135	ZIP Code of Residence	9
23.	136 - 138	County Code of Residence	3
24.	139 - 140	Filler	2
25.	141 - 160	Agency Client Identification Number	20

EXPLANATION OF FIELDS:

40. MEDICARE CLAIM NUMBER (Positions 1-12)--A nine position social security claim number followed by an alphanumeric beneficiary identification code (BIC). Positions 11 and 12 may be blank. This field conveys the Medicare claim number from the EDB.

41. SURNAME (Positions 13-36)--A maximum of twenty-four alphanumeric characters. The name matches the surname on the EDB. Any unused positions are blank.

42. GIVEN NAME (Positions 37-51)--A maximum of fifteen alphabetic characters. The name matches the given name on the EDB. Any unused positions are blank.

43. MIDDLE INITIAL (Position 52)--An alphabetic character. If the beneficiary's middle initial is not reflected on the EDB, the field is blank.

44. SEX CODE (Position 53)--A one position alpha code (male “M”, female “F”). The sex code is the sex code that appears on the EDB.

45. DATE OF BIRTH CCYYMMDD (Positions 54-61)--An eight position numeric field. A date such as November 1, 1909 is displayed as 19091101. The date of birth matches the date of birth on the EDB.

46. BENEFICIARY’S SOCIAL SECURITY NUMBER (Positions 62-70)--A nine position numeric field. The SSN is extracted from the EDB.

47. REDUCED PART A INDICATOR (Position 71)--The presence of a “1” in this position means that the reduced Part A premium rate applies, otherwise it is blank.

48. PART A PREMIUM SURCHARGE INDICATOR (Position 72)--The presence of a “1” in this position means that the Part A premium includes a 10% surcharge for late enrollment, otherwise it is blank.

49. AGENCY CODE (Positions 73-75)--A three position alphanumeric code, beginning with “S”, assigned to the entity which has jurisdiction over the account.

50. RECORD IDENTIFICATION CODE (Position 76)—“B” constant. The “B” identifies this record as a billing record.

51. TRANSACTION CODE (Positions 77-80)--A four position numeric code. The first two positions reflect the type of action taken by CMS for example, accretion, deletion, adjustment. The third and fourth positions contain either the incoming transaction code submitted by the State or a code generated internally by CMS if the action originated with CMS.

52. TRANSACTION SUB-CODE (Position 81)—A one position alpha code that further defines the transaction code.

53. BILLING PERIOD START DATE CCYYMM (Positions 82-87)--A six position numeric field which contains the beginning date (year and month) used in the calculation of the refund or premium amount due for this transaction. (NOTE: the billing period start date and the billing period stop date are inclusive dates.)

54. BILLING PERIOD STOP DATE CCYYMM (Positions 88-93)--A six position numeric field that contains the last date (year and month) used in the calculation of the refund or premium amount due for this transaction. (NOTE: the billing period start date and the billing period stop date are inclusive dates.)

55. PREMIUM AMOUNT DUE OR REFUND $$$$$$¢¢ (Positions 94-101)--An eight position field with leading zeroes. On an accretion or ongoing billing record, this field reflects a debit, that is, the amount the State owes the Federal government. On a deletion record, this field reflects any credit (refund) due the State. On an adjustment record, the adjustment code in the transaction code field determines whether the field reflects a debit or a credit. The Credit Indicator in position 117, when present, means that the premium amount is a credit. Where the Credit Indicator field is blank, it means that the premium amount is a debit.

56. BILL DATE CCYYMM (Positions 102-107)--A six position numeric field that designates the billing file (year and month) on which the transaction appears.

57. CURRENT MONTHLY PREMIUM RATE $$$$¢¢ (Positions 108-113)--A six position numeric field with leading zeroes which contains the current monthly Part A Medicare premium rate.

58. FILLER (Positions 114-116)--Positions reserved for future use.

59. CREDIT INDICATOR (Position 117)—A minus sign (-) in this field means that the premium amount in positions 94 – 101 is a credit. A blank in this field means that the premium amount is a debit.

60. FILLER (Positions 118-126)—Positions reserved for future use.

61. ZIP CODE OF RESIDENCE (Positions 127-135)--A nine position numeric code that is reflected on the EDB. If the EDB only reflects the five-position zip code, the five positions are reflected and the remaining positions are blank.

62. COUNTY CODE OF RESIDENCE (Positions 136-138)--A three position code developed from the EDB. The field may be blank.

63. FILLER (Positions 139-140)--Positions reserved for future use.

64. AGENCY CLIENT IDENTIFICATION NUMBER (Positions 141-160)--The beneficiary's client (or welfare) identification number or any other identifier of the State's choice

3.10.5.4 Part B State Agency Billing Record (RIC B)

Field Number	Position	Field name	Number of positions
1.	1 - 12	Medicare Claim Number	12
2.	13 - 36	Surname	24
3.	37 - 51	Given Name	15
4.	52	Middle Initial	1
5.	53	Sex Code	1
6.	54 - 61	Date of Birth (CCYYMMDD)	8
7.	62 - 70	Beneficiary's Social Security Number	9
8.	71 - 72	Buy-In Eligibility Code	2
9.	73 - 75	Agency Code	3
10.	76	Record Identification Code "B"	1
11.	77 - 80	Transaction Code	4

Field Number	Position	Field name	Number of positions
12.	81	Transaction Sub-Code	1
13.	82 - 87	Billing Period Start Date (CCYYMM)	6
14.	88 - 93	Billing Period Stop Date (CCYYMM)	6
15.	94 - 101	Premium Amount Due or Refund ($$$$$$$¢¢)	8
16.	102 - 107	Bill Date (CCYYMM)	6
17.	108 - 113	Current Monthly Premium Rate ($$$$¢¢)	6
18.	114 - 119	Reduced Monthly Premium Amt ($$$$¢¢)	6
19.	120 – 122	Filler	3
20.	123	Credit Indicator	1
21.	124 – 126	Filler	3
22.	127 - 135	ZIP Code of Residence	9
23.	136 - 138	County Code of Residence	3
24.	139	Filler	1
25.	140	SSI Status Code (SISC)	1
26.	141 - 160	Agency Client Identification Number	20

EXPLANATION OF FIELDS:

65. MEDICARE CLAIM NUMBER (Positions 1-12)--A nine position social security claim number or pseudo social security claim number (if the beneficiary is entitled under a RRB number) followed by an alphanumeric beneficiary identification code (BIC). Positions 11 and 12 may be blank. This field conveys the Medicare claim number from the EDB.

66. SURNAME (Positions 13-36)--A maximum of twenty-four alphanumeric characters. The name matches the surname on the EDB. Any unused positions are blank.

67. GIVEN NAME (Positions 37-51)--A maximum of fifteen alphabetic characters. The name matches the given name on the EDB. Any unused positions are blank.

68. MIDDLE INITIAL (Position 52)--An alphabetic character. If the beneficiary's middle initial is not reflected on the EDB, the field is blank.

69. SEX CODE (Position 53)--A one position alpha code (male “M”, female “F”). The sex code is the sex code that appears on the EDB.

70. DATE OF BIRTH CCYYMMDD (Positions 54-61)--An eight position numeric field. A date such as November 1,1909 is displayed as 19091101. The date of birth matches the date of birth on the EDB.

71. BENEFICIARY’S SOCIAL SECURITY NUMBER (Positions 62-70)--A nine position numeric field. The SSN is extracted from the EDB.

72. BUY-IN ELIGIBILITY CODE (Positions 71-72)--Applicable to Part B buy-in only. Currently, it is a one position alphabetic code that describes the reason the beneficiary is eligible for buy-in. An additional field (position 72) has been allocated for expansion.

73. AGENCY CODE (Positions 73-75)--A three position alphanumeric code assigned to the entity which has jurisdiction over the account.

74. RECORD IDENTIFICATION CODE (Position 76)—“B” constant. The “B” identifies this record as a billing record.

75. TRANSACTION CODE (Positions 77-80)--A four position numeric code. The first two positions reflect the type of action taken by CMS for example, accretion, deletion, adjustment. The third and fourth positions contain either the incoming transaction code submitted by the State or a code generated internally by CMS if the action originated with CMS.

76. TRANSACTION SUB-CODE (Position 81)—A one position alpha code that further defines the transaction code.

77. BILLING PERIOD START DATE CCYYMM (Positions 82-87)--A six position numeric field that contains beginning date (year and month) used in the calculation of the refund or premium amount due for this transaction. NOTE: the billing period start date and billing period stop date are inclusive dates.

78. BILLING PERIOD STOP DATE CCYYMM (Positions 88-93)--A six position numeric field that contains the last date (year and month) used in the calculation of the refund or premium amount due for this transaction. (NOTE: the billing period start date and billing period stop date are inclusive dates.)

79. PREMIUM AMOUNT DUE OR REFUND $$$$$$¢¢ (Positions 94-101)--An eight position field with leading zeroes. On an accretion or ongoing billing record, this field reflects a debit, that is, the amount the State owes the Federal government. On a deletion record, this field reflects any credit (refund) due the State. On an adjustment record, the adjustment code in the transaction code field determines whether the field reflects a debit or a credit. The Credit Indicator in position 123, when present, means that the premium amount is a credit. Where the Credit Indicator field is blank, it means that the premium amount is a debit.

80. BILL DATE CCYYMM (Positions 102-107)--A six position numeric field that designates the billing file (year and month) on which the transaction appears.

81. CURRENT MONTHLY PREMIUM RATE $$$$¢¢ (Positions 108-113)--A six position numeric field with leading zeroes which contains the current monthly Part B Medicare premium rate.

82. REDUCED MONTHLY PREMIUM AMOUNT $$$$¢¢ (Positions 114-119)--A six position numeric field with leading zeroes. This field specifies the amount of the monthly premium reduction under the provisions of the BIPA 606. This is the amount of the reduction, not the new premium rate.

83. FILLER (Positions 120-122)--Positions reserved for future use.

84. CREDIT INDICATOR (Position 123)-- A minus sign (-) in this field means that the premium amount in positions 94 – 101 is a credit. A blank in this field means that the premium amount is a debit.

85. FILLER (Positions 124-126)—Positions reserved for future use.

86. ZIP CODE OF RESIDENCE (Positions 127-135)--A nine position numeric code that is reflected on the EDB. If the EDB only reflects the five-position zip code, the five positions are reflected and the remaining positions are blank.

87. COUNTY CODE OF RESIDENCE (Positions 136-138)--A three position code developed from the EDB record. The field may be blank.

88. FILLER (Position 139)--Position reserved for future use.

89. SSI STATUS CODE (SISC) (Position 140)--A one position alphabetic code which describes the beneficiary's SSI status (if applicable).

90. AGENCY CLIENT IDENTIFICATION NUMBER (Positions 141-160)--The beneficiary's client (or welfare) identification number or any other identifier of the State's choice.

3.10.5.5 Medicare Claim Number Change Record (RIC C)

Field Number	Position	Field name	Number of positions
1.	1 - 12	Medicare Claim Number	12
2.	13 - 36	Surname	24
3.	37 - 51	Given Name	15
4.	52	Middle Initial	1
5.	53	Sex Code	1
6.	54 - 61	Date of Birth (CCYYMMDD)	8
7.	62 - 70	Beneficiary's Social Security Number	9
8.	71 - 72	Filler	2

Field Number	Position	Field name	Number of positions
9.	73 - 75	Agency Code	3
10.	76	Record Identification Code “C”	1
11.	77 - 80	Transaction Code	4
12.	81 - 93	Filler	13
13.	94 - 105	Active Medicare Claim Number	12
14.	106 - 118	Filler	13
15.	119 - 126	Reply Date (CCYYMMDD)	8
16.	127 - 140	Filler	13
17.	141 - 160	Agency Client Identification Number	20

EXPLANATION OF FIELDS:

91. MEDICARE CLAIM NUMBER [INACTIVE NUMBER] (Positions 1-12)--A nine position social security claim number (or pseudo social security claim number if the beneficiary is entitled under a RRB number) followed by an alphanumeric beneficiary identification code (BIC). Positions 11 and 12 may be blank. The claim number in this field is the claim number submitted by the State on an incoming transaction or is the claim number of record on the EDB prior to the claim number change.

92. SURNAME (Positions 13-36)--A maximum of twenty-four alphanumeric characters. The surname in this field is the surname submitted by the State on an incoming transaction or is the surname of record on the EDB when the claim number change is applied to an existing master record. Any unused positions are blank.

93. GIVEN NAME (Positions 37-51)--A maximum of fifteen alphabetic characters. The given name in this field is the given name submitted by the State on an incoming transaction or is the given name of record on the EDB when the claim number change is applied to an existing master record. Any unused positions are blank.

94. MIDDLE INITIAL (Position 52)--An alphabetic character which is the middle initial submitted by the State on an incoming transaction or is the middle initial of record on the EDB when the claim number change is applied to an existing master record. This field may be blank.

95. SEX CODE (Position 53)--A one position alpha code (male “M”, female “F”) which is the sex code submitted by the State on an incoming transaction or is the sex code of record on the EDB when the claim number change is applied to an existing master record.

96. DATE OF BIRTH CCYYMMDD (Positions 54-61)--An eight position numeric field which is the date of birth submitted by the State on an incoming transaction or is the date of birth of record on the EDB when the claim number change is applied to an existing master record.

97. BENEFICIARY'S SOCIAL SECURITY NUMBER (Positions 62-70)--A nine position numeric field. The SSN is the SSN submitted by the State on an incoming transaction or is the SSN of record on the EDB when the claim number change is applied to an existing master record.

98. FILLER (Positions 71-72)--Positions reserved for future use.

99. AGENCY CODE (Positions 73-75)--A three position alphanumeric code assigned to the entity which has jurisdiction over the account.

100. RECORD IDENTIFICATION CODE (Position 76)--"C" constant. The "C" identifies this record as a Medicare claim number change record.

101. TRANSACTION CODE (Positions 77-80)--Positions 77 and 78 contain a "23" for a full claim number change or a BIC only change. Positions 79 and 80 are blank if the claim number change is applied to an ongoing record. If the claim number change is applied to an incoming transaction, positions 79 and 80 contain the two-position transaction code that is contained in the input record.

102. FILLER (Positions 81-93)--Positions reserved for future use.

103. ACTIVE MEDICARE CLAIM NUMBER (Positions 94-105)--The claim number to which the record is being cross-referred consists of a nine position social security claim number (or pseudo social security claim number if the beneficiary is entitled under a RRB number) and an alpha-numeric beneficiary identification code (BIC).

104. FILLER (Positions 106-118)--Positions reserved for future use.

105. REPLY DATE CCYYMMDD (Positions 119-126)--An eight position numeric field. This is the date on which CMS created the RIC C record.

106. FILLER (Positions 127-140)--Positions reserved for future use.

107. AGENCY CLIENT IDENTIFICATION NUMBER (Positions 141-160)--The beneficiary's client or (welfare) identification number or any other identifier of the State's choice.

3.10.5.6 Part A State Agency Reply Record (RIC D)

Field Number	Position	Field name	Number of Positions
1.	1 - 12	Medicare Claim Number	12
2.	13 - 36	Surname	24
3.	37 - 51	Given Name	15
4.	52	Middle Initial	1

Field Number	Position	Field name	Number of Positions
5.	53	Sex Code	1
6.	54 - 61	Date of Birth (CCYYMMDD)	8
7.	62 - 70	Beneficiary's Social Security Number	9
8.	71	Reduced Part A Indicator	1
9.	72	Part A Premium Surcharge Indicator	1
10.	73 - 75	Agency Code	3
11.	76	Record Identification Code "D"	1
12.	77 - 80	Transaction Code	4
13.	81	Transaction Sub-code	1
14.	82 - 87	Billing Period Start Date (CCYYMM)	6
15.	88 - 93	Billing Period Stop Date (CCYYMM)	6
16.	94 - 118	Filler	25
17.	119 - 126	Reply Date (CCYYMMDD)	8
18.	127 - 135	ZIP Code of Residence	9
19.	136 - 138	County Code of Residence	3
20.	139 - 140	Filler	2
21.	141 - 160	Agency Client Identification Number	20

EXPLANATION OF FIELDS:

108. MEDICARE CLAIM NUMBER (Positions 1-12)--A nine position social security claim number (or pseudo social security claim number if the beneficiary is entitled under a RRB number) followed by an alphanumeric beneficiary identification code (BIC). Positions 11 and 12 may be blank. This field conveys the Medicare claim number from the EDB.

109. SURNAME (Positions 13-36)--A maximum of twenty-four alphanumeric characters. The name matches the surname on the EDB. Any unused positions are blank.

110. GIVEN NAME (Positions 37-51)--A maximum of fifteen alphabetic characters. The name matches the given name on the EDB. Any unused positions are blank.

111. MIDDLE INITIAL (Position 52)--An alphabetic character. If the beneficiary's middle initial is not reflected on the EDB, the field is blank.

112. SEX CODE (Position 53)--A one position alpha code (male “M”, female “F”). The sex code matches the sex code that appears on the EDB.

113. DATE OF BIRTH CCYYMMDD (Positions 54-61)--An eight position numeric field. A date such as November 1,1909 is displayed as 19091101. The date of birth matches the date of birth on the EDB.

114. BENEFICIARY’S SOCIAL SECURITY NUMBER (Positions 62-70)--A nine position numeric field. The SSN is extracted from the EDB.

115. REDUCED PART A INDICATOR (Positions 71)--The presence of a “1” in this position means that the reduced Part A premium rate applies, otherwise it is blank.

116. PART A PREMIUM SURCHARGE INDICATOR (Position 72)--The presence of a “1” in this position means that the Part A premium includes a 10% surcharge for late enrollment, otherwise it is blank.

117. AGENCY CODE (Positions 73-75)--A three position alphanumeric code, beginning with “S” assigned to the entity which has jurisdiction over the account.

118. RECORD IDENTIFICATION CODE (Position 76)--“D” constant. The “D” identifies this record as a reply record.

119. TRANSACTION CODE (Positions 77-80)--A four position numeric code. The first two positions convey CMS's response to the State's accretion or deletion record. The last two positions contain the same transaction code as was present on the State input record. In the event that CMS must adjust the start date and/or stop date of the incoming transaction, the transaction code reflects the adjustment.

120. TRANSACTION SUB-CODE (Position 81)--A one position alpha code that further defines the transaction code.

121. BILLING PERIOD START DATE CCYYMM (Positions 82-87)--A six position numeric field which contains beginning date or accretion date (year and month) of the transaction.

122. BILLING PERIOD STOP DATE CCYYMM (Positions 88-93)--A six position numeric field that contains the ending date or deletion date (year and month) of the transaction.

123. FILLER (Positions 94-118)--Positions reserved for future use.

124. REPLY DATE CCYYMMDD (Positions 119-126)--An eight position numeric field. This is the date on which CMS created the RIC D record.

125. ZIP CODE OF RESIDENCE (Positions 127-135)--A nine position numeric code that displays the zip code as carried on the EDB.

126. COUNTY CODE OF RESIDENCE (Positions 136-138)--A three position code developed from the EDB. The field may be blank.

127. FILLER (Positions 139-140)--Positions reserved for future use.

128. AGENCY CLIENT IDENTIFICATION NUMBER (Positions 141-160)--The beneficiary's client (or welfare) identification number or any other identifier of the State's choice.

3.10.5.7 Part B State Agency Reply Record (RIC D)

Field Number	Position	Field name	Number of Positions
1.	1 - 12	Medicare Claim Number	12
2.	13 - 36	Surname	24
3.	37 - 51	Given Name	15
4.	52	Middle Initial	1
5.	53	Sex Code	1
6.	54 - 61	Date of Birth (CCYYMMDD)	8
7.	62 - 70	Beneficiary’s Social Security Number	9
8.	71 - 72	Buy-In Eligibility Code	2
9.	73 - 75	Agency Code	3
10.	76	Record Identification Code “D”	1
11.	77 - 80	Transaction Code	4
12.	81	Transaction Sub-code	1
13.	82 - 87	Billing Period Start Date (CCYYMM)	6
14.	88 - 93	Billing Period Stop Date (CCYYMM)	6
15.	94 - 118	Filler	25
16.	119 - 126	Reply Date (CCYYMMDD)	8

Field Number	Position	Field name	Number of Positions
17.	127 - 135	ZIP Code of Residence	9
18.	136 - 138	County Code of Residence	3
19.	139	Filler	1
20.	140	SSI Status Code (SISC)	1
21.	141 - 160	Agency Client Identification Number	20

EXPLANATION OF FIELDS:

129. MEDICARE CLAIM NUMBER (Positions 1-12)--A nine position social security claim number (or pseudo social security claim number if the beneficiary is entitled under a RRB number) followed by an alphanumeric beneficiary identification code (BIC). Positions 11 and 12 may be blank. This field conveys the Medicare claim number from the EDB.

130. SURNAME (Positions 13-36)--A maximum of twenty-four alphanumeric characters. The name matches the surname on the EDB. Any unused positions are blank.

131. GIVEN NAME (Positions 37-51)--A maximum of fifteen alphabetic characters. The name matches the given name on the EDB. Any unused positions are blank.

132. MIDDLE INITIAL (Position 52)--An alphabetic character. If the beneficiary's middle initial is not reflected on the EDB, the field is blank.

133. SEX CODE (Position 53)--A one position alpha code (male “M”, female “F”). The sex code matches the sex code that appears on the EDB.

134. DATE OF BIRTH CCYYMMDD (Positions 54-61)--An eight position numeric field. A date such as November 1,1909 is displayed as 19091101. The date of birth matches the date of birth on the EDB.

135. BENEFICIARY’S SOCIAL SECURITY NUMBER (Positions 62-70)--A nine position numeric field. The SSN is extracted from the EDB.

136. BUY-IN ELIGIBILITY CODE (Positions 71-72)--Applicable to Part B buy-in only. Currently, it is a one position alphabetic code that describes the reason the beneficiary is eligible for buy-in. An additional field (position 72) has been allocated for expansion.

137. AGENCY CODE (Positions 73-75)--A three position alphanumeric code assigned to the entity which has jurisdiction over the account.

138. RECORD IDENTIFICATION CODE (Position 76)--“D” constant. The “D” identifies this record as a reply record.

139. TRANSACTION CODE (Positions 77-80)--A four position numeric code. The first two positions convey CMS's response to the State's accretion or deletion record. The last two positions contain the same transaction code as was present on the State input record. In the event that CMS must adjust the start date and/or stop date of the incoming transaction, the transaction code reflects the adjustment.

140. TRANSACTION SUB-CODE (Position 81)--A one position alpha code that further defines the transaction code.

141. BILLING PERIOD START DATE CCYYMM (Positions 82-87)--A six position numeric field which contains beginning date or accretion date (year and month) of the transaction.

142. BILLING PERIOD STOP DATE CCYYMM (Positions 88-93)--A six position numeric field that contains the ending date or deletion date (year and month) of the transaction.

143. FILLER (Positions 94-118)--Positions reserved for future use.

144. REPLY DATE CCYYMMDD (Positions 119-126)--An eight position numeric field. This is the date on which CMS created the RIC D record.

145. ZIP CODE OF RESIDENCE (Positions 127-135)--A nine position numeric code that displays the zip code as carried on the EDB.

146. COUNTY CODE OF RESIDENCE (Positions 136-138)--A three position code developed from the EDB record. The field may be blank.

147. FILLER (Positions 139)--Position reserved for future use.

148. SSI STATUS CODE (SISC) (Position 140)--A one-position alphabetic code which describes the beneficiary's SSI status (if applicable).

149. AGENCY CLIENT IDENTIFICATION NUMBER (Positions 141-160)--The beneficiary's client (or welfare) identification number or any other identifier of the State's choice.

3.10.5.8 Personal Characteristics Change Record (RIC E)

Field Number	Position	Field name	Number of Positions
1.	1 - 12	Medicare Claim Number	12
2.	13 - 36	Surname	24
3.	37 - 51	Given Name	15
4.	52	Middle Initial	1
5.	53	Sex Code	1
6.	54 - 61	Date of Birth (CCYYMMDD) from CMS Records	8

Field Number	Position	Field name	Number of Positions
7.	62 - 70	Beneficiary's Social Security Number from CMS Records	9
8.	71 - 72	Filler	2
9.	73 - 75	Agency Code	3
10.	76	Record Identification Code "E"	1
11.	77 - 81	Filler	5
12.	82 - 105	Surname from CMS Records	24
13.	106 - 120	Given Name from CMS Records	15
14.	121	Middle Initial from CMS Records	1
15.	122	Sex Code from CMS Records	1
16.	123 - 130	Date of Birth (CCYYMMDD) from CMS Records	8
17.	131 -139	Beneficiary's Social Security Number from CMS Records	9
18.	140	Filler	1
19.	141 - 160	Agency Client Identification Number	20

EXPLANATION OF FIELDS:

150. MEDICARE CLAIM NUMBER (Positions 1-12)--A nine position social security claim number (or pseudo social security claim number if the beneficiary is entitled under a RRB number) followed by an alphanumeric beneficiary identification code (BIC). Position 12 may be blank. The claim number in this field is the claim number submitted by the State on the incoming transaction.

151. SURNAME (Positions 13-36)--A maximum of twenty-four alphanumeric characters. The surname in this field is the surname submitted by the State on an incoming transaction. Any unused positions are blank.

152. GIVEN NAME (Positions 37-51)--A maximum of fifteen alphabetic characters. The given name in this field is the given name submitted by the State on an incoming transaction. Any unused positions are blank.

153. MIDDLE INITIAL (Position 52)--An alphabetic character. The middle initial is the middle initial submitted by the State on an incoming transaction. This field may be blank.

154. SEX CODE (Position 53)--A one position alpha code (male “M”, female “F”). The sex code is the sex code submitted by the State on an incoming transaction.

155. DATE OF BIRTH CCYYMMDD (Positions 54-61)--An eight position numeric field. The date of birth in this field is the date of birth submitted by the State on an incoming transaction. A date such as November 1,1909 is displayed as 19091101.

156. BENEFICIARY’S SOCIAL SECURITY NUMBER (Positions 62-70)--A nine position numeric field. The SSN is the SSN submitted by the State on the incoming transaction.

157. FILLER (Positions 71-72)--Positions reserved for future use.

158. AGENCY CODE (Positions 73-75)--A three position alphanumeric code assigned to the entity which has jurisdiction over the account.

159. RECORD IDENTIFICATION CODE (Position 76)--“E” constant. The “E” identifies this record as a personal characteristics change record.

160. FILLER (Positions 77-81)--Positions reserved for future use.

161. SURNAME FROM CMS RECORDS (Positions 82-105)--A twenty-four position alpha- numeric field that conveys the beneficiary's surname exactly as it is appears on the EDB. Any unused positions are blank.

162. GIVEN NAME FROM CMS RECORDS (Positions 106-120)--A fifteen position alpha field that conveys the beneficiary's given name exactly as it is appears on the EDB. Any unused positions are blank.

163. MIDDLE INITIAL FROM CMS RECORDS (Position 121)--A one position alpha field that conveys the beneficiary's middle initial exactly as it appears on the EDB. The field may be blank.

164. SEX CODE FROM CMS RECORDS (Position 122)--A one position alpha code (male "M", female "F") which conveys the beneficiary's sex code as it appears on the EDB.

165. DATE OF BIRTH FROM CMS RECORDS CCYYMMDD (Positions 123-130)--An eight position numeric field that conveys the beneficiary's date of birth exactly as it appears on the EDB.

166. BENEFICIARY’S SOCIAL SECURITY NUMBER FROM CMS RECORDS (Positions 131-139)--A nine position numeric field that conveys the beneficiary's own social security number exactly as it appears on the EDB.

167. FILLER (Position 140)--A one-position field reserved for future use.

168. AGENCY CLIENT IDENTIFICATION NUMBER (Positions 141-160)--The beneficiary's client (or welfare) identification number or any other identifier of the State's choice.

3.10.5.9 State Agency Reject Record (RIC F)

Field Number	Position	Field name	Number of Positions
1.	1 - 12	Medicare Claim Number	12
2.	13 - 36	Surname	24
3.	37 - 51	Given Name	15
4.	52	Middle Initial	1
5.	53	Sex Code	1
6.	54 - 61	Date of Birth (CCYYMMDD)	8
7.	62 - 70	Beneficiary's Social Security Number	9
8.	71 - 72	Buy-In Eligibility Code	2
9.	73 - 75	Agency Code	3
10.	76	Record Identification Code "F"	1
11.	77 - 80	Transaction Code	4
12.	81	Transaction Sub-code	1
13.	82 - 87	Billing Period Start Date (CCYYMM)	6
14.	88 - 93	Billing Period Stop Date (CCYYMM)	6
15.	94 - 96	Filler	3
16.	97 - 102	Additional Date (CCYYMM)	6
17.	103 - 118	Filler	16
18.	119 - 126	Reply Date (CCYYMM)	8
19.	127 - 140	Filler	14
20.	141 - 160	Agency Client Identification Number	20

EXPLANATION OF FIELDS:

169. MEDICARE CLAIM NUMBER (Positions 1-12)--A nine position social security claim number (or pseudo social security claim number if the beneficiary is entitled under a RRB number) followed by an alphanumeric beneficiary identification code (BIC). Position 12 may be blank. The claim number in the reject record is the claim number submitted by the State.

170. SURNAME (Positions 13-36)--A maximum of twenty-four alphanumeric characters. Any unused positions are blank. The surname is the surname submitted by the State.

171. GIVEN NAME (Positions 37-51)--A maximum of fifteen alphabetic characters. Any unused positions are blank. The given name is the given name submitted by the State

172. MIDDLE INITIAL (Position 52)--An alphabetic character submitted by the State. If the beneficiary's middle initial was not included on the input record, the field is blank.

173. SEX CODE (Position 53)--A one position alpha code (male “M”, female “F”) submitted by the State.

174. DATE OF BIRTH CCYYMMDD (Positions 54-61)--An eight position numeric field submitted by the State.

175. BENEFICIARY’S SOCIAL SECURITY NUMBER (Positions 62-70)--A nine position numeric field submitted by the State. If the State does not submit an SSN, the field is blank.

176. BUY-IN ELIGIBILITY CODE (Positions 71-72)--Applicable to Part B buy-in only. Currently, it is a one position alphabetic code that describes the reason the beneficiary is eligible for buy-in. An additional field (position 72) has been allocated for expansion. This field reflects the buy-in eligibility code from the State input record. This field is blank on Part A reject records.

177. AGENCY CODE (Positions 73-75)--A three position alphanumeric or numeric code assigned to the entity which has jurisdiction over the account.

178. RECORD IDENTIFICATION CODE (Position 76)--“F” constant. The “F” identifies this record as a State agency reject record.

179. TRANSACTION CODE (Positions 77-80)--A four position numeric code. The first two positions of the code convey the reason that CMS rejected the State’s accretion or deletion record. The last two positions contain the transaction code from the State input record.

180. TRANSACTION SUB-CODE (Position 81)--A one position alpha code that further defines the transaction code.

181. BILLING PERIOD START DATE CCYYMM (Positions 82-87)--A six position numeric field that contains the beginning date or accretion date (year and month) from the State input record.

182. BILLING PERIOD STOP DATE CCYYMM (Positions 88-93)--A six position numeric field that contains the ending date or deletion date (year and month) from the State input record.

183. FILLER (Positions 94-96)--Positions reserved for future use.

184. ADDITIONAL DATE CCYYMM (Positions 97-102)--In most situations this field is blank. However, for certain transaction codes a date is furnished in order to provide a more comprehensive response to the State. The date is a six position numeric field.

185. FILLER (Positions 103-118)--Positions reserved for future use.

186. REPLY DATE CCYYMMDD (Positions 119-126)--An eight position numeric field. This is the date on which CMS created the RIC F record.

187. FILLER (Positions 127-140)--Positions reserved for future use.

188. AGENCY CLIENT IDENTIFICATION NUMBER (Positions 141-160)--The beneficiary's client or (welfare) identification number or any other identifier of the State's choice.

3.10.5.10 Third Party Liability Record

Field Number	Position	Field name	Number of Positions
1.	1 – 7	Total RIC A Records (SSI Alert Records)	7
2.	8	Filler (Blank)	1
3.	9 – 15	Total RIC B Records (CMS Billing Records)	7
4.	16	Filler (Blank)	1
5.	17 –23	Total RIC C Records (Claim Number Change Records)	7
6.	24	Filler (Blank)	1
7.	25 – 31	Total RIC D Records (CMS Reject Records)	7
8.	32	Filler (Blank)	1
9.	33 – 39	Total RIC E Records (Personal Characteristics Change Records)	7
10.	40	Filler (Blank)	1
11.	41 – 47	Total RIC F Records (CMS Reject Records)	7
12.	48 – 72	Filler (Blanks)	25

Field Number	Position	Field name	Number of Positions
13.	73 – 75	Agency Code	3
14.	76	Record Identification Code "T" Constant, Batch Control Record	1
15.	77 – 81	Filler (Blanks)	5
16.	82 – 87	Billing Cycle (CCYYMM)	6
17.	88	Filler (Blank)	1
18.	89 – 95	Total Number of Records on the File	7
19.	96 – 160	Filler (Blanks)	105

THIRD PARTY CONTROL RECORD NOTES:

- The Batch Control Record is appended to the end of the monthly agency-billing file. This record contains a count of the records on that file by record identification codes (RIC).
- The Batch Control Record is a 160 position fixed length record.
- Totals are zero filled to the left when the count is less than 7 positions.
- Last block of data may be 9s padded.

3.10.5.11 Third Party History File

Field Number	Position	Field name	Number of Positions
1.	1 - 12	Medicare Claim Number	12
2.	13 - 36	Surname	24
3.	37 - 51	Given Name	15
4.	52	Middle Initial	1
5.	53	Sex Code	1
6.	54 - 61	Date of Birth (CCYYMMDD)	8
7.	62 - 64	Agency Code	3
8.	65 - 84	Agency Client Identification Number	20

Field Number	Position	Field name	Number of Positions
9.	85	Number of History Fields	1
10.	86 - 88	Current History Agency Code	3
11.	89 - 94	Current History Start Date (CCYYMM)	6
12.	95 - 100	Current History Stop Date (CCYYMM)	6
13.	101 - 102	Current History Transaction Code	2
14.	103 - 106	Filler	4
15.	107 - 108	Current History Buy-In Eligibility Code	2
16.	109 - 114	Current History Reduced Premium Amount ($$$$¢¢)	6
17.	115 - 120	Filler	6
18.	121 - 123	First Prior History Agency Code	3
19.	124 - 129	First Prior History Start Date (CCYYMM)	6
20.	130 - 135	First Prior History Stop Date (CCYYMM)	6
21	136 - 139	Filler	4
22	140 - 141	First Prior History Buy-In Eligibility Code	2
23.	142 - 147	First Prior History Reduced Premium Amount ($$$$¢¢)	6
24.	148 - 153	Filler	6
25.	154 - 185	Second Prior History	32
26.	186 - 218	Third Prior History	33
27.	219 - 251	Fourth Prior History	33
28.	252 - 288	Filler	37

EXPLANATION OF FIELDS:

189. MEDICARE CLAIM NUMBER (Positions 1-12) - A nine position social security claim number (or pseudo social security claim number if the beneficiary is entitled under a RRB claim number) followed by an alphanumeric beneficiary identification code (BIC). Positions 11 and 12 may be blank. This field conveys the Medicare claim number from the EDB.

190. SURNAME (Positions 13-36) - A maximum of twenty-four alphanumeric characters. The name matches the surname on the EDB. Any unused positions are blank.

191. GIVEN NAME (Positions 37-51) - A maximum of fifteen alphabetic characters. The name matches the given name on the EDB. Any unused positions are blank.

192. MIDDLE INITIAL (Position 52) - An alphabetic character. If the beneficiary's middle initial is not reflected on the EDB, the field is blank.

193. SEX CODE (Position 53) - A one position alpha code (male "M", female "F").

194. DATE OF BIRTH (CCYYMMDD) (Positions 54-61) - An eight position numeric field. A date such as November 1, 1909 is displayed as 19091101. The date of birth matches the date of birth on the EDB.

195. AGENCY CODE (Positions 62-64) - A three position alphanumeric code assigned to the entity which has jurisdiction over the account.

196. AGENCY CLIENT IDENTIFICATION NUMBER (Positions 65-84) - The beneficiary's client (or welfare) identification number or any other identifier of the State's choice.

197. NUMBER OF HISTORY FIELDS (Position 85) - The number of history fields contained on the history file.

198. CURRENT HISTORY AGENCY CODE (Positions 86-88) - A three position alphanumeric code assigned to the entity which has jurisdiction over the data reflected in this history period.

199. CURRENT HISTORY START DATE (CCYYMM) (Positions 89-94) - A six position numeric field which contains the beginning date or accretion date (year and month) of the transaction

200. CURRENT HISTORY STOP DATE (CCYYMM) (Positions 95-100) - A six position numeric field that contains the ending date or deletion date (year and month) of the transaction

201. CURRENT HISTORY TRANSACTION CODE (Positions 101-102) - A two position numeric field which contains the last transaction code posted to this coverage period. The field reflects code 41 for an ongoing billing record.

202. FILLER (Positions 103-106) - Reserved for future use.

203. CURRENT HISTORY BUY-IN ELIGIBILITY CODE (Positions 107-108) - Applicable to Part B buy-in records only. Currently a one position alphabetic code that

describes the reason the beneficiary is eligible for buy-in. An additional field has been allocated for expansion.

204. CURRENT HISTORY REDUCED PREMIUM AMOUNT ($$$$¢¢) (Positions 109-114) - Amount of monthly premium reduction if applicable.

205. FILLER (Positions 115-120) - Reserved for future use.

206. FIRST PRIOR HISTORY AGENCY CODE (Positions 121-123) - A three position numeric or alphanumeric code assigned to the entity that had jurisdiction over this account in this coverage period. If the agency code begins with “A”, “B”, “J”, “K” or “X”, a formal third party group paid the premiums. If the agency code begins with a “7”, the premiums were deducted from the beneficiary’s federal civil service retirement annuity. All other three position numbers or “S” followed by two numbers indicate a State Agency.

207. FIRST PRIOR HISTORY START DATE (CCYYMM) (Positions 124-129) - A six position numeric field that contains the beginning date or accretion date (year and month) of the transaction.

208. FIRST PRIOR HISTORY STOP DATE (CCYYMM) (Positions 130-135) -A six position numeric field that contains the ending date or deletion date (year and month) of the transaction.

209. FILLER (Position 136-139) - Reserved for future use.

210. FIRST PRIOR HISTORY BUY-IN ELIGIBILITY CODE (Positions 140-141) - Applicable to Part B buy-in records only. Currently a one position alphabetic code that describes the reason the beneficiary was eligible for buy-in. An additional field has been allocated for expansion.

211. FIRST PRIOR HISTORY REDUCED PREMIUM AMOUNT $$$$¢¢ (Positions 142-147) - Amount of monthly premium reduction for first prior history, if applicable.

212. FILLER (Position 148-153) - Reserved for future use.

213. SECOND PRIOR HISTORY (Positions 154-185) - The format is identical to the First Prior History.

214. THIRD PRIOR HISTORY (Positions 186-218) - The format is identical to the First Prior History.

215. FOURTH PRIOR HISTORY (Positions 219-251) - The format is identical to the First Prior History.

216. FILLER (Positions 252-288) - Reserved for future use.

3.10.6 CMS EDB File Layout

FEB 25, 2004 CMS RECORD SPECIFICATION FOR VIEW EYMH03T

FILE: CMS MEDICAID STATE OUTPUT FILE (COMBINED EDB+MBD DATA)

RECORD FORMAT – Fixed Block

RECORD LENGTH – 1034

BLOCK SIZE – 27918

Field name	Loc	Size	Type OCC	Format/values
*** STATE FINDER RECORD ***	1	80	CHAR	
STATE-SSN-NUM	1	9	CHAR	
STATE-REQ-ID		8	CHAR	
STATE-BENE-ID-NUM		25	CHAR	
STATE-BIRTH-DT		8	CHAR	
STATE-SEX-CD		1	CHAR	
STATE-GVN-NAME		6	CHAR	
STATE-SUR-NAME		6	CHAR	
STATE-CREATE-YYMM		4	CHAR	
STATE-MISC-DATA		13	CHAR	
*** FINDER STATUS ***	81	1	CHAR	
FINDER STATUS CODE:	81	1	NUM	012345
				0 = NOT ON FILE
				1 = BENE_CLM_NUM: EXACT MATCH
	IC MA	TCH		3 = BENE_CLM_NUM: EQUATABLE B
				2 = XREF_CLM_NUM: EXACT MATCH
	IC MA	TCH		4 = XREF_CLM_NUM: EQUATABLE B
	PRIM	ARY BI	C)	5 = BENE_SSN_NUM MATCH (USING
*** BENEFICIARY IDENTIFICATION	82	209	CHAR	

Field name	Loc	Size	Type OCC	Format/values
BENE_IDENT_REL	82	209	CHAR	
BENE_CLM_NUM	82	11	CHAR	
BENE_CLM_ACNT_NUM	82	9	CHAR	
BENE_IDENT_CD	91	2	CHAR	
BENE_BIRTH_DT	93	8	DATE	YYYYMMDD
BENE_DEATH_DT	101	8	DATE	YYYYMMDD
BENE_SEX_IDENT_CD	109	1	NUM	012
				1=MALE
				2=FEMALE
				0=UNKNOWN
BENE_GVN_NAME	110	15	CHAR	
BENE_MDL_NAME	125	1	CHAR	
BENE_SRNM_NAME	126	24	CHAR	
BENE_MLG_CNTCT_ADR_CNT	150	2	NUM	0 THRU 6
BENE_MLG_CNTCT_ADR_MAX	152	2	NUM	06
BENE_MLG_CNTCT_ADR	154	22	CHAR 6	
BENE_RPRSNTV_PYE_SW	286	1	CHAR	YN
				Y=REPAYEE
				N=NO REPPAYEE
EDB_BENE_PTA_PRM_PYR_CD	287	1	CHAR	017
				0=PREVIOUSLY INVOLVED IN PART A THIRD PARTY BILLING

Field name	Loc	Size	Type OCC	Format/values
				1=STATE BILLING.
				7=PRIVATE THIRD PARTY BILLING.
EDB_BENE_PTB_PRM_PYR_CD	288	1	CHAR	0123456789
				0=PREVIOUSLY INVOLVED IN PART B THIRD PARTY BILLING.
				1=STATE BILLING.
				2=PRIVATE GROUP AND PENALTY ONLY GROUP.
				3=CIVIL SERVICE AND PENALTY ONLY GROUP.
				4=PENALTY ONLY GROUP.
				5=CIVIL SERVICE.
				6=CLOSED CIVIL SERVICE AND OPEN PENALTY ONLY GROUP.
				7=PRIVATE THIRD PARTY BILLING.
				8=OPEN CIVIL SERVICE AND CLOSED PENALTY ONLY GROUP.
				9=POTENTIAL CIVIL SERVICE WITH A FUTURE PART B START DATE.
BENE_PTA_NENTLMT_STUS_CD	289	1	CHAR	DFHNR

Field name	Loc	Size	Type OCC	Format/values
				THE FOLLOWING CODES OCCUR WHEN THERE IS NO PART A ENTITLEMENT DATE:
				D=COVERAGE WAS DENIED.
				F=TERMINATED DUE TO INVALID ENROLLMENT OR ENROLLMENT VOIDED.
				H=NOT ELIGIBLE FOR FREE PART A, OR DID NOT ENROLL FOR PREMIUM PART A.
				N=NOT A VALID SSA HOC, BUT USED BY CMS'S THIRD PARTY SYSTEM TO INDICATE A 'POTENTIAL' PTA ENTITLEMENT DATE.
				R=REFUSED BENEFITS.
BENE_PTB_NENTLMT_STUS_CD	290	1	CHAR	DNR
				THE FOLLOWING CODES OCCUR WHEN THERE IS NO PART B ENTITLEMENT DATE:
				D=COVERAGE WAS DENIED
				N=NO (FOREIGN/PUERTO RICAN BENEFICIARY NOT ENTITLED TO SMI. ALSO DUALLY/TECHNICALLY BENEFICIARY IS NOT

Field name	Loc	Size	Type OCC	Format/values
				ENTITLED TO SMI).
				R=REFUSED BENEFITS
*** CROSS-REFERENCE NUMBERS ***	291	114	CHAR	
XREF_BENE_CLM_ACNT_CNT	291	2	NUM	0 THRU 10
XREF_BENE_CLM_ACNT_MAX	293	2	NUM	010
XREF_BENE_CLM_ACNT_REL	295	11	CHAR 10	
XREF_BENE_CLM_NUM	295	11	CHAR	
XREF_BENE_CLM_ACNT_NUM	295	9	CHAR	
XREF_BENE_IDENT_CD	304	2	CHAR	
*** SOCIAL SECURITY NUMBERS ***	405	49	CHAR	
BENE_SSN_NUM_CNT	405	2	NUM	0 THRU 5
BENE_SSN_NUM_MAX	407	2	NUM	05
BENE_SSN_NUM_REL	409	9	CHAR 5	
BENE_SSN_NUM	409	9	NUM	
*** PART A ENTITLEMENT ***	454	18	CHAR	
BENE_PTA_ENTLMT_REL	454	18	CHAR	
BENE_PTA_ENTLMT_STRT_DT	454	8	DATE	YYYYMMDD
BENE_PTA_ENTLMT_TRMNTN_DT	462	8	DATE	YYYYMMDD
BENE_PTA_ENRLMT_RSN_CD	470	1	CHAR	

Field name	Loc	Size	Type OCC	Format/values
BENE_PTA_ENTLMT_STUS_CD	471	1	CHAR	CEGSTWXY
*** PART B ENTITLEMENT ***	472	18	CHAR	
BENE_PTB_ENTLMT_REL	472	18	CHAR	
BENE_PTB_ENTLMT_STRT_DT	472	8	DATE	YYYYMMDD
BENE_PTB_ENTLMT_TRMNTN_DT	480	8	DATE	YYYYMMDD
BENE_PTB_ENRLMT_RSN_CD	488	1	CHAR	
BENE_PTB_ENTLMT_STUS_CD	489	1	CHAR	CFGSTWY
*** HOSPICE COVERAGE ***	490	124	CHAR	
BENE_HOSPC_CVRG_CNT	490	2	NUM	0 THRU 5
BENE_HOSPC_CVRG_MAX	492	2	NUM	05
BENE_HOSPC_CVRG_REL	494	24	CHAR 5	
BENE_HOSPC_CVRG_STRT_DT	494	8	DATE	YYYYMMDD
BENE_HOSPC_CVRG_TRMNTN_DT	502	8	DATE	YYYYMMDD
BENE_HOSPC_CVRG_PRCSG_DT	510	8	DATE	YYYYMMDD
*** ENTITLEMENT REASON ***	614	9	CHAR	
BENE_ENTLMT_RSN_CD_REL	614	9	CHAR	
BENE_ENTLMT_RSN_CD_CHG_DT	614	8	DATE	YYYYMMDD
BENE_ENTLMT_RSN_CD	622	1	NUM	0123
				0=INSURED DUE TO

Field name	Loc	Size	Type OCC	Format/values
				AGE (OASI)
				1=INSURED DUE TO DIB
				2=INSURED DUE TO ESRD
				3=INSURED DUE TO DIB+ESRD
*** RESIDENCE ***	623	17	CHAR	
BENE_RSDNC_REL	623	17	CHAR	
BENE_RSDNC_CHG_DT	623	8	DATE	YYYYMMDD
BENE_MLG_CNTCT_ZIP_CD	631	9	CHAR	
*** DISABILITY INSURANCE ***	640	17	CHAR	
BENE_HCFA_DIB_ENTLMT_REL	640	17	CHAR	
BENE_HCFA_DIB_ENTLMT_STRT_DT	640	8	DATE	YYYYMMDD
BENE_HCFA_DIB_ENTLMT_END_DT	648	8	DATE	YYYYMMDD
BENE_DIB_ENTLMT_DT_JSTFCTN_CD	656	1	NUM	1A
				1=ENTITLED TO MEDICARE DUE TO PRIOR DIB
				A=ENTITLED TO MEDICARE BASED ON SSA DIB AND THE 24-MONTH WAITING PERIOD WAIVED.
*** GROUP HEALTH ORGANIZATION *	657	214	CHAR	

Field name	Loc	Size	Type OCC	Format/values
BENE_GHO_ENRLMT_CNT	657	2	NUM	0 THRU 10
BENE_GHO_ENRLMT_MAX	659	2	NUM	010
BENE_GHO_ENRLMT_REL	661	21	CHAR 10	
BENE_GHO_ENRLMT_STRT_DT	661	8	DATE	YYYYMMDD
BENE_GHO_DISENRLMT_DT	669	8	DATE	YYYYMMDD
BENE_GHO_CNTRCT_NUM	677	5	CHAR	
*** END STAGE RENAL DISEASE	871	17	CHAR	
COVERAGE				
BENE_ESRD_CVRG_REL	871	17	CHAR	
BENE_ESRD_CVRG_STRT_DT	871	8	DATE	YYYYMMDD
BENE_ESRD_CVRG_TRMNTN_DT	879	8	DATE	YYYYMMDD
BENE_ESRD_TRMNTN_DT_RSN_CD	887	1	CHAR	ABCDE
*** END STAGE RENAL DISEASE	888	16	CHAR	
DIALYSIS				
BENE_ESRD_DLYS_REL	888	16	CHAR	
BENE_ESRD_DLYS_STRT_DT	888	8	DATE	YYYYMMDD
BENE_ESRD_DLYS_STOP_DT	896	8	DATE	YYYYMMDD
*** END STAGE RENAL DISEASE	904	16	CHAR	
TRANSPLANT				

Field name	Loc	Size	Type OCC	Format/values
BENE_ESRD_TRNSPLNT_REL	904	16	CHAR	
BENE_ESRD_TRNSPLNT_STRT_DT	904	8	DATE	YYYYMMDD
BENE_ESRD_TRNSPLNT_STOP_DT	912	8	DATE	YYYYMMDD
*** THIRD PARTY PART A HISTORY	920	43	CHAR	
BENE_TP_PTA_HSTRY_REL	920	43	CHAR	
BENE_PTA_TP_STRT_DT	920	8	DATE	YYYYMMDD
BENE_PTA_TP_PRM_PYR_CD	928	3	CHAR	
BENE_PTA_TP_ACRTN_TRANS_CD	931	4	CHAR	
FILLER	935	1	CHAR	
BENE_PTA_TP_ACRTN_BLG_MO_DT	936	6	NUM	YYYYMM
BENE_PTA_TP_TRMNTN_DT	942	8	DATE	YYYYMMDD
BENE_PTA_TP_DLTN_TRANS_CD	950	4	CHAR	
FILLER	954	1	CHAR	
BENE_PTA_TP_DLTN_BLG_MO_DT	955	6	NUM	YYYYMM
BENE_PTA_TP_BUYIN_ELGBLTY_CD	961	1	CHAR	
FILLER	962	1	CHAR	
*** THIRD PARTY PART B HISTORY	963	43	CHAR	
BENE_TP_PTB_HSTRY_REL	963	43	CHAR	
BENE_PTB_TP_STRT_DT	963	8	DATE	YYYYMMDD
BENE_PTB_TP_PRM_PYR_CD	971	3	CHAR	

Field name	Loc	Size	Type OCC	Format/values
BENE_PTB_TP_ACRTN_TRANS_CD	974	4	CHAR	
FILLER	978	1	CHAR	
BENE_PTB_TP_ACRTN_BLG_MO_DT	979	6	NUM	YYYYMM
BENE_PTB_TP_TRMNTN_DT	985	8	DATE	YYYYMMDD
BENE_PTB_TP_DLTN_TRANS_CD	993	4	CHAR	
FILLER	997	1	CHAR	
BENE_PTB_TP_DLTN_BLG_MO_DT	998	6	NUM	YYYYMM
BENE_PTB_TP_BUYIN_ELGBLTY_CD	1004	1	CHAR	
FILLER	1005	1	CHAR	
*** MBD PERSONAL BENEFITS				
PACKAGE ELECTION	1006	29	CHAR	
MBD_PBP_ELCT_REL	1006	29	CHAR	
MBD_GHP_ENRL_EFCTV_DT	1006	8	DATE	YYYYMMDD
MBD_PBP_STRT_DT	1014	8	DATE	YYYYMMDD
MBD_PBP_END_DT	1022	8	DATE	YYYYMMDD
MBD_PBP_NUM	1030	3	CHAR	
MBD_PBP_CVRG_TYPE_CD	1033	2	CHAR	3,5,6,8,10
				3=COORDINATED CARE PLAN (CCP)
				5=PRIVATE FEE FOR SERVICE (PFFS)
				6=PROGRAM OF ALL INCLUSIVE CARE FOR

Field name	Loc	Size	Type OCC	Format/values
				THE ELDERLY (PACE).
				8=DEMONSTRATION
				10=COST/HEALTH CARE PREPAYMENT PLAN (HCPP)

3.10.7 EDS DB File Layout

MAR 26, 2007

FILE: EDS MEDICAID STATE OUTPUT FILE (COMBINED EDB+MBD DATA)

RECORD FORMAT: FB

RECORD LENGTH: 1034

BLOCK SIZE: 27918

Field Name	Loc	Size	Type OCC	Format/Values
*** STATE FINDER RECORD ***	1	80	CHAR	
STATE-SSN-NUM		9	CHAR	
STATE-REQ-ID		8	CHAR	
STATE-BENE-ID-NUM		25	CHAR	
STATE-BIRTH-DT		8	CHAR	ALWAYS
STATE-SEX-CD		1	CHAR	ALWAYS
STATE-GVN-NAME		6	CHAR	ALWAYS
STATE-SUR-NAME		6	CHAR	ALWAYS
STATE-CREATE-YYMM		4	CHAR	
STATE-MISC-DATA		13	CHAR	
*** FINDER STATUS ***	81	1	CHAR	
FINDER STATUS CODE:	81	1	NUM	012345

Field Name	Loc	Size	Type OCC	Format/Values
				0 = NOT ON FILE
				1 = BENE_CLM_NUM: EXACT MATCH
				3 = BENE_CLM_NUM: EQUATABLE BIC MATCH
				2 = XREF_CLM_NUM: EXACT MATCH
				4 = XREF_CLM_NUM: EQUATABLE BIC MATCH
				5 = BENE_SSN_NUM MATCH (USING PRIMARY BIC)
*** BENEFICIARY IDENTIFICATION	82	209	CHAR	
BENE_IDENT_REL	82	209	CHAR	
BENE_CLM_NUM	82	11	CHAR	
BENE_CLM_ACNT_NUM	82	9	CHAR	
BENE_IDENT_CD	91	2	CHAR	
BENE_BIRTH_DT	93	8	DATE	YYYYMMDD
BENE_DEATH_DT	101	8	DATE	YYYYMMDD
BENE_SEX_IDENT_CD	109	1	NUM	012
				1=MALE
				2=FEMALE
				0=UNKNOWN
BENE_GVN_NAME	110	15	CHAR	
BENE_MDL_NAME	125	1	CHAR	

Field Name	Loc	Size	Type OCC	Format/Values
BENE_SRNM_NAME	126	24	CHAR	
BENE_MLG_CNTCT_ADR_CNT	150	2	NUM	0 THRU 6
BENE_MLG_CNTCT_ADR_MAX	152	2	NUM	6
BENE_MLG_CNTCT_ADR	154	22	CHAR	6
BENE_RPRSNTV_PYE_SW	286	1	CHAR	YN
				Y=REPAYEE
				N=NO REPAYEE
EDB_BENE_PTA_PRM_PYR_CD	287	1	CHAR	017
				0=PREVIOUSLY INVOLVED IN
				PART A THIRD PARTY BILLING
				1=STATE BILLING
				7=PRIVATE THIRD PARTY BILLING
EDB_BENE_PTB_PRM_PYR_CD	288	1	CHAR	0123456789
				0=PREVIOUSLY INVOLVED IN
				PART B THIRD PARTY BILLING
				1=STATE BILLING
				2=PRIVATE GROUP AND PENALTY ONLY GROUP
				3=CIVIL SERVICE AND PENALTY ONLY GROUP
				4=PENALTY ONLY

Field Name	Loc	Size	Type OCC	Format/Values
				GROUP
				5=CIVIL SERVICE
				6=CLOSED CIVIL SERVICE AND OPEN PENALTY ONLY GROUP
				7=PRIVATE THIRD PARTY BILLING
				8=OPEN CIVIL SERVICE AND CLOSED PENALTY ONLY GROUP
				9=POTENTIAL CIVIL SERVICE WITH A FUTURE PART B START DATE
BENE_PTA_NENTLMT_STUS_CD	289	1	CHAR	DFHNR
				The following codes occur when there is no Part A entitlement date:
				D=COVERAGE WAS DENIED
				F=TERMINATED DUE TO INVALID ENROLLMENT OR ENROLLMENT VOIDED
				H=NOT ELIGIBLE FOR FREE PART A, OR DID NOT ENROLL FOR PREMIUM PART A
				N=NOT A VALID SSA HOC, BUT USED BY CMS'S THIRD PARTY SYSTEM TO INDICATE A 'POTENTIAL' PTA ENTITLEMENT DATE

Field Name	Loc	Size	Type OCC	Format/Values
				R=REFUSED BENEFITS
BENE_PTB_NENTLMT_STUS_CD	290	1	CHAR	DNR
				THE FOLLOWING CODES OCCUR WHEN THERE IS NO PART B ENTITLEMENT DATE
				D=COVERAGE WAS DENIED
				N=NO (FOREIGN/PUERTO RICAN BENEFICIARY NOT ENTITLED TO SMI. ALSO DUALLY/TECHNICALLY BENEFICIARY IS NOT ENTITLED TO SMI).
				R=REFUSED BENEFITS

3.10.8 KMAA Extract File

3.10.8.1 Header Record

Field	Size	Description
RECORD IDENTIFIER	9(2)	Always contain 00
LOAD TYPE	X(1)	Always contain “U”.
CLIENT	X(15)	Always contain “KMAA“.
CLIENT NAME	X(30)	Always contain “KENTUCKY KMAA“.
FILLER	X(50)	Spaces.
CREATION DATE	9(8)	Cycle date in YYYYMMDD
DATA TABLE NAME	X(15)	Tables data retrieved from

3.10.8.2 Detail Record

Field	Size	Description

Field	Size	Description
MEDICAID ID	9(10)	Members Medicaid id.
RECORD TYPE	9(2)	This is 01 for Part A and 02 for Part B
BEGIN DATE	9(8)	Record's effective date in YYYYMMDD
END DATE	9(8)	Record's stop date in YYYYMMDD
ADD DATE	9(8)	Record's date buy proc in YYYYMMDD
TRANSACTION DATE	9(8)	Same as ADD DATE
OPT CODE	X(1)	Set to blank at this time
PAYER CODE	X(3)	Value from Parameter table depending on whether it is Part A or Part B
FILLER	X(73)	Spaces

3.10.8.3 Trailer Record

Field	Size	Descriptions
RECORD IDENTIFIER	9(2)	Always contain 99
CLIENT	X(15)	Always contain "KMAA ".
RECORD COUNT	9(9)	Total of records in file
FILLER	X(95)	Spaces

3.10.9 Part D MMA Enrollment File (Old Version)

3.10.9.1 Header Record

Field	Size	Description
RECORD IDENTIFIER	X(3)	Always contain "MMA".
STATE CODE	X(2)	Valid State Code.
CREATE MONTH	9(2)	Valid Month code for current month.
CREATE YEAR	9(4)	Valid current year code.

Field	Size	Description
FILLER	X(169)	Spaces.

3.10.9.2 Detail Record

Field	Size	DET	LIS	Description
RECORD IDENTIFIER	X(3)	X	X	Identifies record transaction type. Values are DET for an enrollment detail record and LIS for a low-income subsidy determination.
ELIGIBILITY MONTH/YEAR	9(6)	X		Calendar Month/Year Code for applicable Medicaid eligibility (MMCCYY) 9 Fill for LIS record.
ELIGIBILITY STATUS	X(1)	X		Indicator of beneficiary's Medicaid eligibility for that person-month – Valid values "Y" (yes) or "N" (no) or "9" for a LIS record
HIC	X(15)	X	X	Health Insurance Claim Number (Medicare ID)
HIC-RRB IND	X(1)	X	X	Indicator for HIC or RRB – Valid Values: "R" for RRB and "H" for HIC
SOCIAL SECURITY NUM	9(9)	X	X	Beneficiary's own Social Security number
SMA IDENTIFIER	X(25)	O	O	State Medicaid Agency Enrollee Identifier – For use by state in associating records on return file
FIRST NAME	X(12)	X	X	Beneficiary's first name
LAST NAME	X(20)	X	X	Beneficiary's last name
MIDDLE NAME	X(15)	X	X	Beneficiary's middle name
SUFFIX NAME	X(4)	X	X	Beneficiary's suffix name
SEX	X(1)	X	X	Beneficiary Gender. values F=Female, M=Male, 9=Unknown
DATE OF BIRTH	9(8)	X	X	Beneficiary date of birth (MMDDCCYY)
DUAL STATUS CODE	9(2)	X		01 = Eligible is entitled to Medicare-QMB only

Field	Size	DET	LIS	Description
				02 = Eligible is entitled to Medicare-QMB AND Medicaid coverage including RX (Medicaid drug coverage criterion only applies through December 2005) 03 = Eligible is entitled to Medicare-SLMB only 04 = Eligible is entitled to Medicare-SLMB AND Medicaid coverage including RX (Medicaid drug coverage criterion only applies through December 2005) 05 = Eligible is entitled to Medicare-QDWI 06 = Eligible is entitled to Medicare-Qualifying individuals 08 = Eligible is entitled to Medicare-Other Full Dual Eligible (Non QMB, SLMB,QWDI or QI)with Medicaid coverage including RX (Medicaid drug coverage criterion only applies through December 2005) 09 = Eligible is entitled to Medicare – Other Dual Eligible but without Medicaid coverage, includes Pharmacy Plus and 1115 drug-only demonstration. If unknown = 99
FPL % IND	9(1)	X		Federal Poverty Level Indicator. Values: 1=at or below 100% FPL, 2=above 100% FPL. If unknown = 9.
DRUG COVERAGE IND	9(1)	X		0=no drug coverage by Medicaid; 1= Medicaid drug coverage. If unknown = 9. Effective January, 2006 code this field as 9.
INSTITUTIONAL STATUS IND	X(1)	X		Indicator of nursing facility, intermediate care facility for mental retardation or inpatient psychiatric hospital Values are “Y” or “N”

Field	Size	DET	LIS	Description
				If unknown= “9”. Code this field as “Y” only when the individual is institutionalized for the entire span of eligibility for the month.
LOW-INCOME SUBSIDY DETERMINATION HISTORY SECTION				
PART D SUBSIDY APPLICATION APPROVAL CODE	X(1)		X	Identifies whether application was approved or not. Approved code values Y=yes, N=no , N/A=9
PART D SUBSIDY APPROVED/DISAPPROVED DATE	9(8)		X	Approved date MMDDCCYY. N/A=‘99999999’ if unknown.
PART D SUBSIDY START DATE	9(8)		X	Subsidy Start Date MMDDCCYY. N/A= ‘99999999’. May not be earlier than 01/01/2006. Must be first day of the month in which application received by state.
PART D SUBSIDY END DATE	9(8)		X	Subsidy End Date MMDDCCYY; for determinations through 2006, end date is 12/31/2006. Thereafter, end date is determined by state, in manner and frequency state determines. N/A=’99999999’.
PART D % OF FPL	9(3)		X	Federal Poverty Level for the low income subsidy beneficiaries. Do not fill this out for those individuals who receive any Medicaid benefits, including payment of Medicare cost-sharing obligations. N/A=’999’.
PART D SUBSIDY LEVEL	9(3)		X	Identifies portion of Part D premium subsidized, based on sliding scale linked to %FPL. If person is under 135% FPL, enter 100. If person is 136-140% FPL, enter 075. If person is 141-145% FPL, enter 050. If person is 146-149% FPL, enter 025. If person has 150% FPL, enter 000. N/A=’999’.

Field	Size	DET	LIS	Description
INCOME USED FOR DETERMINATION	X(1)		X	Income Used Indicator 1=Individual, 2=Couple N/A=’9’
RESOURCE LEVEL	X(1)		X	Resource Level 1=over limit, 2=under limit N/A=’9’.
BASIS OF PART D SUBSIDY DENIAL	X(1)		X	Subsidy Denial codes 1=NAB Not enrolled in Part A/B, 2=NUS Does not reside in USA, 3=FTC Failure to Cooperate, 4=RES Resources too High, 5=INC Income too High. N/A=’9’
RESULT OF AN APPEAL	X(1)			Appeal Result Y=yes, N=no (Only populated if appeal is filed). N/A=’9’
CHANGE TO PREVIOUS DETERMINATION	X(1)			Change to Previous Determination Indicator Y=yes, N=no. Enter Y if this record changes a determination sent in a previous transmission. Default is N. N/A=’9’
DETERMINATION CANCELLED	X(1)			Cancelled Indicator Y=yes, N=no. Default is N. Enter Y if this record cancels previous record sent. N/A=’9’
FILLER	X(23)			Space filled and may be used in the future.

3.10.9.3 Trailer Record

Field	Size	Description
RECORD IDENTIFIER	X(3)	Always contain “MMA”.
BENE RECORD COUNT	9(8)	Total number of records on the file.

Field	Size	Description
STATE CODE	X(2)	Valid State Code.
CREATE MONTH	9(2)	Valid Month code for current month.
CREATE YEAR	9(4)	Valid current year code.
FILLER	X(161)	Spaces.

3.10.10 Part D MMA Enrollment File

3.10.10.1 Header Record Physical Layout

Field Name	Format	Position	
		Start	End
RECORD IDENT CODE	X(03)	001	003
STATE CODE	X(02)	004	005
CREATE MONTH	9(02)	006	007
CREATE YEAR	9(04)	008	011
FILLER	X(169)	012	180

3.10.10.2 Data Element Name Specifications

RECORD IDENT CODE	Always contains value of “MMA”	
STATE CODE	State Code - Valid Code	
	Alabama	AL
	Alaska	
	Arizona	AZ
	Arkansas	AR
	California	CA
	Colorado	CO
	Connecticut	CT
	Delaware	DE

	District of Columbia DC Florida Georgia GA Hawaii Idaho Illinois Indiana IN Iowa Kansas KS Kentucky KY Louisiana LA Maine Maryland MD Massachusetts MA Washington Michigan MI Minnesota MN Mississippi MS
CREATE MONTH	Month Code for Current Month – Valid Values (01 – 12)Calendar Month equals Month the file is created (for example January=01, December=12)
CREATE YEAR	Year Code for Current Year – that is 2006 Current Year equals Calendar Year the file is created

3.10.10.3 State Enrollment File Record Layout

Field Name	Format	Position	
		Start	End
RECORD IDENT CODE	X(03)	001	003
ELIGIBILITY MONTH/YEAR	9(06)	004	009
ELIGIBILITY STATUS	X(01)	010	010

Field Name	Format	Position	
		Start	End
HIC/RRB	X(15)	011	025
HIC-RRB IND	X(01)	026	026
SOCIAL SECURITY NUM	9(09)	027	035
SMA IDENTIFIER	X(20)	036	055
FIRST NAME	X(12)	056	067
LAST NAME	X(20)	068	087
MIDDLE NAME	X(15)	088	102
SUFFIX NAME	X(04)	103	106
SEX	X(01)	107	107
DATE OF BIRTH	9(08)	108	115
DUAL STATUS CODE	9(02)	116	117
FPL % IND	9(01)	118	118
DRUG COVERAGE IND	9(01)	119	119
INSTITUTIONAL STATUS IND	X(01)	120	120

NOTE: The following fields are based on Part D Subsidy applications processed by the state.

Field Name	Format	Position	
		Start	End
PART D SUBSIDY APPRVD	X(01)	121	121
PART D SUBSIDY APPRVD DATE	9(08)	122	129
PART D SUBSIDY START DATE	9(08)	130	137

Field Name	Format	Position	
		Start	End
PART D SUBSIDY END DATE	9(08)	138	145
PART D % FPL	9(03)	146	148
PART D SUBSIDY LEVEL	9(03)	149	151
INCOME USED FOR DETERMINATION	X(01)	152	152
RESOURCE LEVEL	X(01)	153	153
BASIS OF PART D SUBSIDY DENIAL	X(01)	154	154
RESULT OF AN APPEAL	X(01)	155	155
RESULT OF AN APPEAL CHANGE TO PREVIOUS DETERMINATION	X(01)	156	156
DETERMINATION CANCLD	X(01)	157	157
FILLER	X(23)	158	180

3.10.10.4 State Enrollment Record Data Element Specifications

RECORD IDENT CODE	Identifies record transaction type. Code as "DET" for an enrollment detail record, "PRO" for a prospective Dual Eligible records, and "LIS" is for a low-income subsidy determination. Each record type requires completion of different fields. Whether a field is required for each record type is indicated in the Record-Type = DET or LIS indication in the field specifications. PRO records require the same fields as DET records. For fields not applicable for the record type specified, code the field with the appropriate default or unknown value (for example, "9" fill)
ELIGIBILITY MONTH/YEAR	RECORD TYPE – DET, PRO Format :MMCCYY Calendar Month/Year Code for applicable Medicaid eligibility (for example012006). Valid

	Month Values: 01 – 12 (for example January=01, December=12.) OR 999999 for a LIS record For retroactive enrollment records use effective month of the changes for each record. Retroactive changes must be submitted to reflect prior-month changes in one or more of the following fields: - ELIGIBILITY STATUS - HIC/RRB - HIC-RRB IND - SOCIAL SECURITY NUM - SEX - DATE OF BIRTH - DUAL STATUS CODE - FPL % IND - INSTITUTIONAL STATUS IND Retro active records must include replacement values for ALL fields for that record; NOT just the field(s) that have changed
ELIGIBILITY STATUS	RECORD TYPE – DET, PRO Indicator of beneficiary's Medicaid eligibility for that person-month – Valid values "Y" (yes) or "N" (no) or "9" for a LIS record This field requires the value 'Y' for a PRO detail record, or the detail record is rejected.
HIC/RRB	RECORD TYPE – DET, LIS, PRO Either the Health Insurance Claim Number (HIC) or the Railroad Retirement Board Number (RRB), whichever the state has active and available for the beneficiary. (NOTE: Alphanumeric Field – LEFT JUSTIFIED)
HIC-RRB IND	RECORD TYPE – DET, LIS, PRO Indicator for HIC or RRB – Valid Values: "R" for RRB and "H" for HIC This field is not used by CMS.
SOCIAL SECURITY NUM	RECORD TYPE – DET, LIS, PRO

	Beneficiary's own Social Security Number
SMA IDENTIFIER	RECORD TYPE – Optional for any record type State Medicaid Agency Enrollee Identifier for the beneficiary – For use by state in associating records on Enrollment Return File.
FIRST NAME	RECORD TYPE – DET, LIS, PRO Beneficiary First Name (First 12 letters)
LAST NAME	RECORD TYPE – DET, LIS, PRO Beneficiary Last Name (First 20 letters)
MIDDLE NAME	RECORD TYPE – DET, LIS, PRO Beneficiary Middle Name (First 15 letters)
SUFFIX NAME	RECORD TYPE – DET, LIS, PRO Beneficiary Suffix Name (First 4 letters)for example, JR, III
SEX	RECORD TYPE – DET, LIS, PRO Beneficiary Gender – Sex code values F=Female, M=Male, 9=Unknown
DATE OF BIRTH	RECORD TYPE – DET, LIS, PRO MMDDCCYY: Month, day, century and year of Beneficiary Birth, (for example 05051935). If unknown = '99999999' NOTE: If unknown is submitted the record is unmatched
DUAL STATUS CODE	RECORD TYPE – DET, PRO 01 = Eligible is entitled to Medicare- QMB only 02 = Eligible is entitled to Medicare- QMB AND Full Medicaid coverage 03 = Eligible is entitled to Medicare-SLMB only 04 = Eligible is entitled to Medicare- SLMB AND Full Medicaid coverage 05 = Eligible is entitled to Medicare- QDWI 06 = Eligible is entitled to Medicare- Qualifying individuals 08 = Eligible is entitled to Medicare- Other Full Dual Eligibles (Non QMB, SLMB,QWDI or QI)with

	Full Medicaid coverage 09 = Eligible is entitled to Medicare – Other Dual Eligibles but without Medicaid coverage, includes Pharmacy Plus and 1115 drug-only demonstration. If unknown = 99. NOTE: For prospective enrollment (PRO) records, include a dual eligible code for full dual eligible status which best describes the dual status assuming that individual is Medicare eligible; that is, codes 02-QMB plus, 04-SLMB plus, or 08-Other.
FPL % IND	RECORD TYPE – DET, PRO Federal Poverty Level Indicator. Values: 1=at or below 100% FPL, 2=above 100% FPL. FPL is determined using the individual state's income rules. If unknown = 9. Include income based on the eligibility intake system, but do not derive this field from the Dual Status Code. If it is necessary to replace unknown FPL % IND values, CMS derives the value using consistent rules.
DRUG COVERAGE IND	RECORD TYPE – DET, PRO This field is not used by CMS. Effective January 2006, code this field as 9. For months prior to January 2006 the values submitted were: 0=no drug coverage by Medicaid; 1= Medicaid drug coverage. If unknown = 9.
INSTITUTIONAL STATUS IND	RECORD TYPE – DET, PRO Indicator of NURSING FACILITY, INTERMEDIATE CARE FACILITY/MENTALLY RETARDED or INPATIENT PSYCHIATRIC HOSPITAL: Values "Y" or "N". If unknown = "9". Code this field as "Y" (yes) only when the individual is institutionalized for the

	entire span of eligibility for the month.
LOW-INCOME SUBSIDY DETERMINATION HISTORY SECTION	THE FOLLOWING FIELDS RELATE TO THE LOW INCOME SUBSIDY DETERMINATIONS. FOR RECORDS THAT ARE DUAL ENROLLMENT RECORDS (DET),ALL THE FOLLOWING FIELDS SHOULD BE DEFAULTED TO 9-FILLED VALUES
PART D SUBSIDY APPLICATION APPROVAL CODE	RECORD TYPE – LIS Identifies whether application was approved or not. Approved code values Y=yes, N=no , N/A=9
PART D SUBSIDY APPROVED/DISAPPROVED DATE	RECORD TYPE – LIS Approved date MMDDCCYY. N/A='99999999' if unknown.
PART D SUBSIDY START DATE	RECORD TYPE – LIS Subsidy Start Date MMDDCCYY. N/A= '99999999'. May not be earlier than 01/01/2006. Must be first day of the month in which application received by state.

PART D % OF FPL	RECORD TYPE – LIS For those individuals who apply for the low income subsidy, identify the specific percent of Federal Poverty Level, as defined by Federal LIS income determination policy. Do not fill this out for those individuals who receive any Medicaid benefits, including payment of Medicare cost-sharing obligations. N/A='999'.
PART D SUBSIDY LEVEL	RECORD TYPE – LIS Identifies portion of Part D premium subsidized, based on sliding scale linked to %FPL. If person is under 135% FPL, enter 100. If person is 136-140% FPL, enter 075. If person is 141-145% FPL, enter 050. If person is 146-149% FPL, enter 025. If person has 150% FPL, enter 000. N/A='999'.
INCOME USED FOR DETERMINATION	RECORD TYPE – LIS Income Used Indicator 1=Individual, 2=Couple N/A='9'
RESOURCE LEVEL	RECORD TYPE – LIS

Resource Level 1=over limit, 2=under limit

N/A='9'.

BASIS OF PART D SUBSIDY DENIAL

RECORD TYPE – LIS

Denial codes

1=NAB (Not enrolled in Medicare Part A or B),

2=NUS (Does not reside in the USA),

3=FTC (Failure to Cooperate),

4=RES (Resources too High),

5=INC (Income too High).

9 = N/A

RESULT OF AN APPEAL

RECORD TYPE – LIS

Appeal Result Y=yes, N=no (Only populated if appeal is filed). N/A='9'.

CHANGE TO PREVIOUS DETERMINATION

RECORD TYPE – LIS

Change to Previous Determination Indicator Y=yes, N=no. Enter Y if this record changes a determination sent in a previous transmission. Default is N. N/A='9'.

DETERMINATION CANCELLED

RECORD TYPE – LIS

Cancelled Indicator Y=yes, N=no. Default is N. Enter Y if this record cancels previous record sent. N/A='9'.

3.10.10.5 State Trailer Physical Record Layout

Field Name	Format	Position	
		Start	End
RECORD IDENT CODE	X(03)	001	003
BENE RECORD COUNT	9(08)	004	011
STATE CODE	X(02)	012	013
CREATE MONTH	9(02)	014	015

Field Name	Format	Position	
		Start	End
CREATE YEAR	9(04)	016	019
FILLER	X(161)	020	180

3.10.10.6 Trailer Record Data Element Specifications

Data Element Name Specifications

RECORD IDENT CODE	Identifies Record as Trailer always = 'TRL"	
BENE RECORD COUNT	Total number of records on the file	
STATE CODE	State Code - Valid Code	
	Alabama	AL
	Alaska	
	Arizona	AZ
	Arkansas	AR
	California	CA
	Colorado	CO
	Connecticut	CT
	Delaware	DE
	District of Columbia	DC
	Florida	
	Georgia	GA
	Hawaii	
	Idaho	
	Illinois	
	Indiana	IN
	Iowa	
	Kansas	KS
	Kentucky	KY
	Louisiana	LA

	Maine Maryland MD Massachusetts MA Washington Michigan MI Minnesota MN Mississippi MS
CREATE MONTH	Month Code for Current Month – Valid Values (01 – 12)Calendar Month equals Month the file is created (for example January=01, December=12
CREATE YEAR	Year Code for Current Year – that is 2006 Current Year equals Calendar Year the file is created

3.10.11 Part D MMA Enrollment Response File (Old Version)

3.10.11.1 Header Response Record

Field	Size	Description
RECORD IDENT CODE	X(3)	"SRF"
FILE PROCESS TIMESTAMP	9(26)	The exact time that the state file had been processed. Format: YYYY.MM.DD.HH.MM.SS.NNNNNN
FILE ACCEPT IND	X(1)	Y = The state file had been accepted; N = the state file had not been accepted.
FILLER	X(1)	Spaces.
RECORDS TOTAL	9(8)	The total number of detail records in the state file. RECORDS DUPLICATE + RECORDS NONDUP = RECORDS TOTAL. RECORDS VALID + RECORDS INVALID = RECORDS TOTAL.
RECORDS DUPLICATE	9(8)	The total number of duplicate detail records found in the state file.
RECORDS NONDUP	9(8)	The total number of non-duplicate detail records found in the state file.
RECORDS VALID	9(8)	The total number of valid detail records found in the file. Valid records are non-duplicate and provide valid essential information. RECORDS MATCHED + RECORDS NOT MATCHED = RECORDS VALID.
RECORDS INVALID	9(8)	The total number of invalid detail records found in the file
RECORDS MATCHED	9(8)	The total number of detail records that could be matched successfully to an individual on the Medicare Beneficiary Database.
RECORDS NOT MATCHED	9(8)	The total number of detail records that could not be matched successfully to an individual on the Medicare Beneficiary Database.

Field	Size	Description
FILE CREATE MONTH	9(2)	Create Month of the MMA State File
FILE CREATE YEAR	9(4)	Create Year of the MMA State File
FILLER	X(22)	Spaces.
ORIGINAL STATE HEADER RECORD 180 BYTES		
RECORD IDENT CODE	X(3)	Always contains value of “MMA”
STATE CODE	X(2)	State Code - Valid Code Kentucky KY
CREATE MONTH	9(2)	Month the file is created (for example January=01, December=12)
CREATE YEAR	9(4)	Year the file is created
FILLER	X(169)	Spaces
FILLER	X(2666)	Spaces

3.10.11.2 Detail Response Record

Field	Size	Description
ORIGINAL RECORD SUBMITTED BY STATE		
RECORD IDENTIFIER	X(3)	Identifies record transaction type. Values are DET for an enrollment detail record and LIS for a low-income subsidy determination.
ELIGIBILITY MONTH/YEAR	9(6)	Calendar Month/Year code for applicable Medicaid eligibility (MMCCYY) 9 Fill for LIS record.
ELIGIBILITY STATUS	X(1)	Indicator of beneficiary’s Medicaid eligibility for that person-month – Valid values “Y” (yes) or “N” (no) or “9” for a LIS record
HIC	X(15)	Health Insurance Claim Number (Medicare ID)

Field	Size	Description
HIC-RRB IND	X(1)	Indicator for HIC or RRB – Valid Values: “R” for RRB and “H” for HIC
SOCIAL SECURITY NUM	9(9)	Beneficiary’s own Social Security number
SMA IDENTIFIER	X(25)	State Medicaid Agency Enrollee Identifier – For use by state in associating records on return file
FIRST NAME	X(12)	Beneficiary’s first name
LAST NAME	X(20)	Beneficiary’s last name
MIDDLE NAME	X(15)	Beneficiary’s middle name
SUFFIX NAME	X(4)	Beneficiary’s suffix name
SEX	X(1)	Beneficiary’s gender. values F=Female, M=Male, 9=Unknown
DATE OF BIRTH	9(8)	Beneficiary’s date of birth (MMDDCCYY)
DUAL STATUS CODE	9(2)	01 = Eligible is entitled to Medicare- QMB only 02 = Eligible is entitled to Medicare- QMB AND Medicaid coverage including RX (Medicaid drug coverage criterion only applies through December 2005) 03 = Eligible is entitled to Medicare- SLMB only 04 = Eligible is entitled to Medicare- SLMB AND Medicaid coverage including RX (Medicaid drug coverage criterion only applies through December 2005) 05 = Eligible is entitled to Medicare - QDWI 06 = Eligible is entitled to Medicare - Qualifying individuals 08 = Eligible is entitled to Medicare - Other Full Dual Eligible (Non QMB, SLMB,QWDI or QI)with Medicaid coverage including RX (Medicaid drug coverage criterion only applies through December 2005) 09 = Eligible is entitled to Medicare – Other Dual Eligible but without Medicaid coverage, includes Pharmacy Plus

Field	Size	Description
		and 1115 drug-only demonstration. If unknown = 99
FPL % IND	9(1)	Federal Poverty Level Indicator. Values: 1=at or below 100% FPL, 2=above 100% FPL. If unknown = 9.
DRUG COVERAGE IND	9(1)	0=no drug coverage by Medicaid; 1= Medicaid drug coverage. If unknown = 9. Effective January, 2006 code this field as 9.
INSTITUTIONAL STATUS IND	X(1)	Indicator of nursing facility, intermediate care facility for mental retardation or inpatient psychiatric hospital Values are “Y” or “N” If unknown = “9”. Code this field as “Y” only when the individual is institutionalized for the entire span of eligibility for the month.
PART D SUBSIDY APPLICATION APPROVAL CODE	X(1)	Identifies whether application was approved or not. Approved code values Y=yes, N=no, 9=N/A?
PART D SUBSIDY APPROVED/DISAPPROVED DATE	9(8)	Approved date MMDDCCYY. N/A=‘99999999’ if unknown.
PART D SUBSIDY START DATE	9(8)	Subsidy Start Date MMDDCCYY. N/A= ‘99999999’. May not be earlier than 01/01/2006. Must be first day of the month in which application received by state.
PART D SUBSIDY END DATE	9(8)	Subsidy End Date MMDDCCYY; for determinations through 2006, end date is 12/31/2006. Thereafter, end date is determined by state, in manner and frequency state determines. N/A=’99999999’.
PART D % OF FPL	9(3)	Federal Poverty Level for the low income subsidy beneficiaries. Do not fill this out for those individuals who receive any Medicaid benefits, including payment of Medicare cost-sharing obligations. N/A=’999’.
PART D SUBSIDY LEVEL	9(3)	Identifies portion of Part D premium subsidized, based

Field	Size	Description
		on sliding scale linked to %FPL. If person is under 135% FPL, enter 100. If person is 136-140% FPL, enter 075. If person is 141-145% FPL, enter 050. If person is 146-149% FPL, enter 025. If person has 150% FPL, enter 000. N/A='999'.
INCOME USED FOR DETERMINATION	X(1)	Income Used Indicator 1=Individual, 2=Couple N/A='9'
RESOURCE LEVEL	X(1)	Resource Level 1=over limit, 2=under limit N/A='9'.
BASIS OF PART D SUBSIDY DENIAL	X(1)	Subsidy Denial codes 1=NAB Not enrolled in Part A/B 2=NUS Does not reside in USA 3=FTC Failure to Cooperate 4=RES Resources too High 5=INC Income too High N/A='9'
RESULT OF AN APPEAL	X(1)	Appeal Result Y=yes, N=no (Only populated if appeal is filed). N/A='9'
CHANGE TO PREVIOUS DETERMINATION	X(1)	Change to Previous Determination Indicator Y=yes, N=no. Enter Y if this record changes a determination sent in a previous transmission. Default is N. N/A='9'
DETERMINATION CANCELLED	X(1)	Cancelled Indicator Y=yes, N=no. Default is N. Enter Y if this record cancels previous record sent. N/A='9'
FILLER	X(23)	Space filled and may be used in the future.
ERROR RETURN CODES (ERC)		
RECORD IDENTIFIER ERC	X(2)	If this field is invalid, the detail record is invalid. 00: Value is Valid 01: Invalid - Value is not in Valid Value Set

		97: System processing error
ELIGIBILITY MONTH/YEAR ERC	X(2)	If this field is invalid, the DET detail record is invalid. 00: Value is Valid 02: Invalid - Value is not Numeric 04: Invalid - Date is Unknown 10: Invalid - Value is Future 11: Invalid - Month value is not between 01 and 12 inclusive 20: Invalid - Year value is before 2004 99: Not Scanned - LIS Record 97: System processing error
ELIGIBILITY STATUS ERC	X(2)	If this field is invalid, the DET detail record is invalid. 00: Value is Valid 01: Invalid - Value is not in Valid Value Set 99: Not Scanned - LIS Record 97: System processing error
HIC ERC	X(2)	If this field is invalid the detail record is invalid. It is one of the critical fields. 00: Value is Valid 01: Invalid - Value is not in Valid Value Set 03: Invalid - Field is Empty 97: System processing error. One of the following combinations should be valid in order for the record to be valid. - HICN or RRB, Social Security Number, Date of Birth - HICN or RRB, Date of Birth - Social Security Number, Date of Birth
HIC-RRB-IND REC	X(2)	00: Value is Valid 01: Invalid - Value is not in Valid Value Set

		97: System processing error
SOCIAL SECURITY NUM ERC	X(2)	If this field is invalid the detail record is invalid. It is one of the critical fields. 00: Value is Valid 01: Invalid - Value is not in Valid Value Set 02: Invalid - Value is not Numeric 03: Invalid - Field is Empty 97: System processing error
SEX ERC	X(2)	00: Value is Valid 01: Invalid - Value is not in Valid Value Set 97: System processing error
DATE OF BIRTH ERC	X(2)	00: Value is Valid 02: Invalid - Value is not Numeric 04: Invalid - Date is Unknown 10: Invalid - Value is Future 11: Invalid - Month value is not between 01 and 12 inclusive 12: Invalid - Day value is out of range 21: Warning - Year is before 1899 97: System processing error Critical Identification field: Additionally, a detail record is considered invalid if it does not have one of the following combinations of identifying information: - HICN or RRB, Social Security Number, Date of Birth - HICN or RRB, Date of Birth - Social Security Number, Date of Birth
DUAL STATUS CODE ERC	X(2)	00: Value is Valid 01: Invalid - Value is not in Valid Value Set 40: Warning - Value is 99 for Dual Eligible record

		99: Not Scanned - LIS record 97: System processing error
FPL % IND ERC	X(2)	00: Value is Valid 01: Invalid - Value is not in Valid Value Set 99: Not Scanned - LIS record 97: System processing error
DRUG COVERAGE IND ERC	X(2)	00: Value is Valid 01: Invalid - Value is not in Valid Value Set 99: Not Scanned - LIS record 97: System processing error
INSTITUTIONAL STATUS IND ERC	X(2)	00: Value is Valid 01: Invalid - Value is not in Valid Value set 99: Not Scanned - LIS record 97: System processing error
PART D SUBSIDY APPLICATION APPROVAL CODE ERC (formerly PART D SUBSIDY APPRVD ERC)	X(2)	If this field is invalid, the LIS detail record is invalid. 00: Value is Valid 01: Invalid - Value is not in Valid Value set 98: Not Scanned - DET record 97: System processing error
PART D SUBSIDY APPRVD/DISAPPRVD DATE ERC (formerly PART D SUBSIDY APPRVD DATE ERC)	X(2)	If this field is invalid, the LIS detail record is invalid. 00: Value is Valid 02: Invalid - Value is not Numeric 04: Invalid - Date is Unknown 10: Invalid - Value is Future 11: Invalid - Month value is not between 01 and 12 inclusive 12: Invalid - Day value is out of range 31: Invalid - Value is later than Part D Subsidy End Date

		98: Not Scanned - DET record 97: System processing error
PART D SUBSIDY START DATE ERC	X(2)	If this field is invalid, the LIS detail record is invalid. 00: Value is Valid 02: Invalid - Value is not Numeric 04: Invalid - Date is Unknown 10: Invalid - Value is Future 11: Invalid - Month value is not between 01 and 12 inclusive 12: Invalid - Day value is out of range 31: Invalid - Value is later than Part D Subsidy End Date 36: Invalid – Value is earlier than January 1, 2006 37: Warning - Day value is not first day of the month 98: Not Scanned - DET record 97: System processing error
PART D SUBSIDY END DATE ERC	X(2)	00: Value is Valid 02: Invalid - Value is not Numeric 04: Invalid - Date is Unknown 11: Invalid - Month value is not between 01 and 12 inclusive 12: Invalid - Day value is out of range 33: Invalid - Value is earlier than Part D Subsidy Approved/Disapproved Date 34: Invalid - Value is earlier than Part D Subsidy Start Date 35: Invalid - Value is earlier than Part D Subsidy Approved/Disapproved Date and Part D Subsidy Start Date 98: Not Scanned - DET record

		97: System processing error
PART D % OF FPL ERC	X(2)	00: Value is Valid 02: Invalid - Value is not Numeric. 98: Not Scanned - DET record 97: System processing error
PART D SUBSIDY LEVEL ERC	X(2)	00: Value is Valid 01: Invalid - Value is not in Valid Value set 98: Not Scanned - DET record 97: System processing error
INCOME USED FOR DETERMINATION ERC	X(2)	00: Value is Valid 01: Invalid - Value is not in Valid Value set 98: Not Scanned - DET record 97: System processing error
RESOURCE LEVEL ERC	X(2)	00: Value is Valid 01: Invalid - Value is not in Valid Value set 98: Not Scanned - DET record 97: System processing error
BASIS OF PART D SUBSIDY DENIAL ERC	X(2)	00: Value is Valid 01: Invalid - Value is not in Valid Value set 98: Not Scanned - DET record 97: System processing error
RESULT OF AN APPEAL ERC	X(2)	00: Value is Valid 01: Invalid - Value is not in Valid Value set 98: Not Scanned - DET record 97: System processing error
CHANGE TO PREVIOUS DETERMINATION ERC	X(2)	00: Value is Valid 01: Invalid - Value is not in Valid Value Set 98: Not Scanned - DET record

		97: System processing error
DETERMINATION CANCLD ERC	X(2)	00: Value is Valid 01: Invalid - Value is not in Valid Value Set 98: Not Scanned DET record 97: System processing error
CMS MBD FILE		
RECORD RETURN CODE	X(6)	This field is an assessment of the detail record. 000000: Record is Valid no errors. 000001: Record is Valid with errors. 000002: Record is Invalid: Invalid Record Identification Code. 000003: Record is Invalid: Insufficient Valid Identifying Information 000004: Record is Invalid: DET Record - Invalid Key Fields 000005: Record is Invalid: LIS Record - Invalid Key Fields 000006: Record is Invalid: DET Record - Duplicate 000007: Record is Invalid: LIS Record - Duplicate 000008: Record is Invalid: Input Record is Incorrect Length
MEDICARE PART A/B FINDER CODE	X(1)	For Dual Eligible (DET) records, this field indicates the presence of Medicare Part A and/or Medicare Part B entitlement during the Eligibility Month/Year. For Low-Income Subsidy (LIS) records, this field indicates the presence of Medicare Part A and/or Medicare Part B entitlement during the first month of the Subsidy period as given by the Part D Subsidy Approved/Disapproved Date. Values: 0 = The person had Medicare Part A and/or Medicare Part B 1 = The person had neither Medicare Part A nor

		Medicare Part B
MEDICARE PART D FINDER CODE	X(1)	For Dual Eligible (DET) records, this field indicates the presence of Medicare Part D enrollment during the Eligibility Month/Year. For Low-Income Subsidy (LIS) records, this field indicates the presence of Medicare Part D enrollment during the first month of the Subsidy period as given by the Part D Subsidy Approved/Disapproved Date. Values: 0 = The person had Medicare Part D 1 = The person did not have Medicare Part D
BENEFICIARY IDENTIFICATION This remainder of the record is populated if the person was found on the Medicare Beneficiary Database. If the person is not found successfully on the Medicare Beneficiary Database, the remainder of the record is populated with spaces.		
BENE CLM ACNT NUM	X(9)	The number identifying the primary Medicare beneficiary under the SSA or RRB programs. This number along with the Beneficiary Identification Code uniquely identifies a Medicare Beneficiary.
BENE IDENT CD	X(2)	A code that is used in conjunction with the Beneficiary Claim Account Number to uniquely identify a Medicare beneficiary. The BIC Code establishes the beneficiary's relationship to a primary Social Security Administration (SSA) or Railroad Retirement Board (RRB) wage earner and is used to justify entitlement to Medicare benefits.
BENE BIRTH DT	9(8)	The date of birth of the Medicare beneficiary. MMDDCCYY: Month, day, century and year
BENE DEATH DT	9(8)	The date of death of the Medicare beneficiary. MMDDCCYY: Month, day, century and year
BENE SEX IDENT CD	X(1)	Represents the sex of the Medicare beneficiary. Examples include: Male and Female Valid values:

		0 = Unknown 1 = Male 2 = Female
BENE GIVN NAME	X(30)	The first name of the beneficiary.
BENE MDL NAME	X(1)	The first initial of the Medicare beneficiary middle name.
BENE SURN NAME	X(40)	The last name (surname) of the Medicare beneficiary including any following titles.
CROSS REFERENCE NUMBERS (10 OCCURRENCES)		
XREF BENE CLM ACCT NUM	9(9)	An additional beneficiary claim account number associated with the Medicare beneficiary. The beneficiary's entitlement has been cross-referenced from this number to the beneficiary's active claim account number.
XREF BENE IDENT CODE	9(2)	The beneficiary's identification code associated with the Medicare beneficiary's cross-referred claim account number.
SOCIAL SECURITY NUMBERS (5 OCCURRENCES)		
BENE SSN NUM	9(9)	The beneficiary's identification number that was assigned by the Social Security Administration.
MAILING ADDRESS		
MLNG ADDR LINE 1	X(40)	The first line of the address.
MLNG ADDR LINE 2	X(40)	The second line of the street address.
MLNG ADDR LINE 3	X(40)	The third line of the street address.
MLNG ADDR LINE 4	X(40)	The fourth line of the mailing address.
MLNG ADDR LINE 5	X(40)	The fifth line of the mailing address.
MLNG ADDR LINE 6	X(40)	The sixth line of the mailing address.
MLNG ADDR CITY NAME	X(40)	The name of the city for the Medicare beneficiary's residence, or temporary residence and/or mailing address.
MLNG ADDR STATE CODE	X(2)	The beneficiary’s postal state code.
MLNG ADDR ZIP CODE	X(9)	The zip code associated with the address

MLNG ADDR CHG DT	9(8)	The date a new or corrected address becomes effective for a Medicare beneficiary. MMDDCCYY: Month, day, century and year
RESIDENCE ADDRESS		
RSDNC ADDR LINE 1	X(40)	The first line of the address.
RSDNC ADDR LINE 2	X(40)	The second line of the street address.
RSDNC ADDR LINE 3	X(40)	The third line of the street address.
RSDNC ADDR LINE 4	X(40)	The fourth line of the mailing address.
RSDNC ADDR LINE 5	X(40)	The fifth line of the mailing address.
RSDNC ADDR LINE 6	X(40)	The sixth line of the mailing address.
RSDNC ADDR CITY NAME	X(40)	The name of the city for the Medicare beneficiary's residence, or temporary residence and/or mailing address.
RSDNC ADDR STATE CODE	X(2)	The beneficiary’s postal state code.
RSDNC ADDR ZIP CODE	X(9)	The zip code associated with the address
RSDNC ADDR CHG DT	9(8)	The date a new or corrected address becomes effective for a Medicare beneficiary. MMDDCCYY: Month, day, century and year
REPRESENTATIVE PAYEE		
BENE REP PAYEE SW	X(1)	A switch that indicates whether the beneficiary has a Representative Payee for social security cash benefit purposes. Values: Blank = Field is not applicable, no rep payee indicated Y = Beneficiary has designated a representative payee
NON-ENTITLEMENT STATUS		
PRT A NENTLMT STUS CODE	X(1)	The reason for a beneficiary's current non-entitlement to Medicare Part A benefits. Values: D = Coverage was denied F = Terminated due to invalid enrollment or enrollment

		voided H = Not eligible for free Part A, or did not enroll for premium Part A R = Refused benefits N = Not a valid SSA HIC, but used by CMS Third Party system to indicate a potential PTA entitlement date
PRT B NENTLMT STUS CODE	X(1)	The reason for a beneficiary's current non-entitlement to Medicare Part B benefits. Values: D = Coverage was denied N = No (Foreign/Puerto Rican beneficiary not entitled to SMI) Also, dually/technically, beneficiary is not entitled to SMI. R = Refused benefits
ENTITLEMENT REASON (5 OCCURRENCES)		
BENE ENTLMT RSN CD CHG DT	9(8)	The date that the reason for entitlement was changed for a beneficiary. This is not the effective date of entitlement. MMDDCCYY: Month, day, century and year
BENE ENTLMT RSN CD	X(4)	This code identifies the reason for the beneficiary's entitlement to Medicare benefits. Values are: 0 = Beneficiary insured due to age (OASI); 1 = Beneficiary insured due to disability; 2 = Beneficiary insured due to End Stage; Renal Disease (ESRD); 3 = Beneficiary insured due to disability and current ESRD.
PART A ENTITLEMENT (5 OCCURRENCES)		
BENE PTA ENTLMT STRT DT	9(8)	The date a beneficiary became entitled to Medicare benefits. MMDDCCYY: Month, day, century and year
BENE PTA ENTLMT END DT	9(8)	The Medicare program entitlement termination date for a beneficiary. The last day that a beneficiary is entitled to benefits. After this day the benefits are terminated.

		MMDDCCYY: Month, day, century and year
BENE PTA ENRLMT RSN CD	X(1)	This code is used by SSA to reflect information about a specific Part A enrollment and is based upon equitable relief (and Medicare's usual business rules for Part B start date may not be appropriate) Values: A = Attainment of age 65 B = Equitable relief D = Disability G = General Enrollment Period I = Initial Enrollment Period J = MQGE Entitlement K = Renal disease is or was a reason for entitlement prior to age 65 or 25th month of disability L = Late filing M = Termination based on renal entitlement but entitlement based on disability continues N = Age 65 and uninsured P = Potentially insured beneficiary is enrolled for Medicare coverage only Q = Quarters of coverage requirements are involved R = Residency requirements are involved T = Disabled working individual U = Unknown Blank = Not applicable
BENE PTA ENTLMT STUS CD	X(1)	Represents the Medicare Part A entitlement status for a beneficiary. Values are: E = Free Part Entitlement G = Entitled due to good cause Y = Currently entitled, premium is payable Valid values when Part A Entitlement Effective date and

		Termination Date are present: C = No longer entitled due to disability cessation S = Terminated, no longer entitled under ESRD provision T = Terminated for non-payment of premiums W = Voluntary with drawl from premium coverage X = Free Part A terminated or refused HI
PART B ENTITLEMENT (5 OCCURRENCES)		
BENE PTB ENTLMT STRT DT	9(8)	The date a beneficiary became entitled to Medicare benefits. MMDDCCYY: Month, day, century and year
BENE PTB ENTLMT END DT	9(8)	The Medicare program entitlement termination date for a beneficiary. The last day that a beneficiary is entitled to benefits. After this day the benefits are terminated. MMDDCCYY: Month, day, century and year
BENE PTB ENRLMT RSN CD	X(1)	This code is used by SSA to reflect information about a specific Part B enrollment and is based upon equitable relief (and Medicare's usual business rules for Part B start Date may not be appropriate) Valid values: B = Equitable relief C = Good Cause D = Deemed date of birth F = Working Aged G = General enrollment period I = Initial enrollment period K = Renal disease is or was a reason for entitlement prior to age 65 or 25th month of disability M = Termination based on renal entitlement but entitlement based on disability continues R Residency requirements are involved S = State Buy-In U = Unknown

BENE PTB ENTLMT STUS CD	X(1)	This code represents the Medicare Part B entitlement status for a beneficiary. Valid values when Part B Entitlement Effective date is present and Termination Date is blank: G Entitled due to good cause Y Currently entitled, premium is payable Valid values when Part B Entitlement Effective date and Termination Date are present: C No longer entitled due to disability cessation F Terminated due to invalid enrollment or enrollment voided S Terminated, no longer entitled under ESRD provision T Terminated for non-payment of premiums W Voluntary withdrawal from premium coverage
HOSPICE COVERAGE (5 OCCURRENCES)		
BENE HSPC CVRG STRT DT	9(8)	The elected start date of a beneficiary's period of Hospice Coverage. MMDDCCYY: Month, day, century and year
BENE HSPC CVRG END DT	9(8)	The termination date of a beneficiary's period of Hospice Coverage. MMDDCCYY: Month, day, century and year
DISABILITY INSURANCE (3 OCCURRENCES)		
BENE DIB ENTLMT STRT DT	9(8)	The date that a beneficiary covered by the SSA disability program becomes entitled to Medicare benefits. MMDDCCYY: Month, day, century and year
BENE DIB ENTLMT END DT	9(8)	The date that Medicare benefits due to disability end for a beneficiary who was covered by the SSA disability program. MMDDCCYY: Month, day, century and year
BENE DIB ENTLMT DT JSTFCTN CD	X(1)	The justification for a beneficiary's Part A and/or Medicare Part B entitlement dates based upon his/her disability insurance benefits (DIB) status. 1 = BENEFICIARY IS ENTITLED TO MEDICARE COVERAGE DUE TO PRIOR PERIODS OF SSA

		DISABILITY ENTITLEMENT A = BENEFICIARY IS ENTITLED TO MEDICARE BASED UPON SSA DISABILITY AND THE 24 MONTH WAITING PERIOD HAS BEEN WAIVED BLANK = N/A
GROUP HEALTH ORGANIZATION (10 OCCURRENCES)		
BENE GHO ENRLMT STRT DT	9(8)	The date that the beneficiary enrolled in the Service Elections. MMDDCCYY: Month, day, century and year
BENE GHO ENRLMT END DT	9(8)	The date that the beneficiary disenrolled in the Service Elections. MMDDCCYY: Month, day, century and year
BENE GHO CNTRCT NUM	X(5)	Unique identification for an agreement between HCFA and a Managed Care Organization (MCO) enabling the MCO to provide Medicare + choice coverage to eligible beneficiaries.
MBD PLAN BENEFIT PACKAGE ELECTION (10 OCCURRENCES)		
MBD GHP ENRLMT EFCTV DT	9(8)	The date that the beneficiary enrolled in the Service Elections. MMDDCCYY: Month, day, century and year
MBD PBP STRT DT	9(8)	Date the PBP election started. MMDDCCYY: Month, day, century and year
MBD PBP END DT	9(8)	Date the PBP election ended. MMDDCCYY: Month, day, century and year
MBD PBP NUM	X(3)	A unique identifier for the managed care benefit package.
MBD PBP CVRG TYPE CD	X(2)	Identifies the type of managed care enrollment or FFS period. 3 =CCP COORDINATED CARE PLAN 6 = PACE PROGRAM OF ALL INCLUSIVE CARE FOR THE ELDERLY 8 =DEMODEMONSTRATION 5 = PFFS PRIVATE FEE FOR SERVICE 10 = Cost/HCPPCOST/HEALTH CARE PREPAYMENT PLAN 9 = FFS (FEE FOR SERVICE)

END STAGE RENAL DISEASE COVERAGE (1 OCCURRENCE)		
BENE ESRD CVRG STRT DT	9(8)	The date on which the beneficiary is entitled to Medicare in some part because of a diagnosis of End Stage Renal Disease. MMDDCCYY: Month, day, century and year
BENE ESRD CVRG END DT	9(8)	The date on which the beneficiary is no longer entitled to Medicare under ESRD Provisions. MMDDCCYY: Month, day, century and year
BENE ESRD TRMNTN RSN CD	X(1)	The reason Medicare-Based ESRD coverage was terminated. DATA VALIDATION: A = Month of transplant plus 36 months; B = Last month of chronic dialysis; C = Part A termination; D = Death; E = ESRD ended
END STAGE RENAL DISEASE DIALYSIS (1 OCCURRENCE)		
BENE ESRD DLYS STRT DT	9(8)	A date that indicates when the ESRD Dialysis started. MMDDCCYY: Month, day, century and year
BENE ESRD DLYS END DT	9(8)	A date that indicates when ESRD Dialysis ended. MMDDCCYY: Month, day, century and year
END STAGE RENAL DISEASE TRANSPLANT (1 OCCURRENCE)		
BENE ESRD TRNSPLNT STRT DT	9(8)	A date that indicates when a kidney transplant operation occurred. MMDDCCYY: Month, day, century and year
BENE ESRD TRNSPLNT END DT	9(8)	A date that indicates when a kidney transplant failed. MMDDCCYY: Month, day, century and year
THIRD PARTY PART A HISTORY (5 OCCURRENCES)		
BENE PTA TP STRT DT	9(8)	The start date of a private third party group's or state's liability for a beneficiary's Part A premium. MMDDCCYY: Month, day, century and year

BENE PTA TP PRM PYR CD	X(3)	Part A - The identifier for a third party agency (either a private group's, state buy-in agency) responsible for paying a beneficiary's Medicare Part A premium. Part A: S01- S99 State billing T01-Z98 Private Third Party Billing Z99 Conditional State Group Payer Enrollment.
BENE PTA TP END DT	9(8)	The termination date of a private third party group's or state's liability for a beneficiary's Part A premium. MMDDCCYY: Month, day, century and year
BENE PTA TP BUYIN ELGBLTY CD	X(1)	A code that indicates the reason for Part A state buy-in eligibility. A = AGED MEMBER OF SSI PAYMENTS (CMS TO STATE) B = BLIND MEMBER OF SSI PAYMENTS (CMS TO STATE) C = ENTITLED TO PART A OF TITLE IV (AFDC) (STATE TO CMS) D = DISABLE MEMBER OF SSI PAYMENTS (CMS TO STATE) E = AGED MEMBER OF SUPPLEMENTAL PAYMENT ADMINISTERED BY SSA (CMS TO STATE) F = BLIND MEMBER OF SUPPLEMENTAL PAYMENT ADMINISTERED BY SSA (CMS TO STATE) G = DISABLED MEMBER OF SUPPLEMENTAL PAYMENT ADMINISTERED BY SSA (CMS TO STATE) H = AGED, BLIND, OR DISABLED MEMBER OF A ONE-TIME PAYMENT (OTP) (CMS TO STATE) M = ENTITLED TO MEDICAL ASSISTANCE ONLY (MAO), NON-CASH MEMBER (STATE TO CMS) Z = DEEMED CATEGORICALLY NEEDY (STATE TO CMS)
THIRD PARTY PART B HISTORY (5 OCCURRENCES)		

BENE PTB TP STRT DT	9(8)	The start date of a private third party group's or state's liability for a Part B premium. MMDDCCYY: Month, day, century and year
BENE PTB TP PRM PYR CD	X(3)	Part B - The identifier for a third party agency (either a private group, state buy-in agency or the Office of Personnel Management (OPM) responsible for paying a beneficiary's Medicare Part B premium. Part B: Blank No Bill Determined 000 Beneficiary is having Part B premium deducted from Title II check 001 Uninsured beneficiary 005 Insured beneficiary 006 Program Service Center control, no bill 007 Special age 72 enrollee 008 PSC annual billing 010- 650 State billing 700 Office of Personnel Management (OPM) A01-R99 Group Payers for Part B premiums.
BENE PTB TP TRMNTN DT	9(8)	The termination date of a private third party group's or state's liability for a beneficiary's Part B premium. MMDDCCYY: Month, day, century and year
BENE PTB TP BUYIN ELGBLTY CD	X(1)	A code that indicates the reason for Part B state buy-in eligibility. A = AGED MEMBER OF SSI PAYMENTS (CMS TO STATE) B = BLIND MEMBER OF SSI PAYMENTS (CMS TO STATE) C = ENTITLED TO PART A OF TITLE IV (AFDC) (STATE TO CMS) D = DISABLE MEMBER OF SSI PAYMENTS (CMS TO STATE) E = AGED MEMBER OF SUPPLEMENTAL PAYMENT ADMINISTERED BY SSA (CMS TO STATE) F = BLIND MEMBER OF SUPPLEMENTAL PAYMENT

		ADMINISTERED BY SSA (CMS TO STATE) G = DISABLED MEMBER OF SUPPLEMENTAL PAYMENT ADMINISTERED BY SSA (CMS TO STATE) H = AGED, BLIND, OR DISABLED MEMBER OF A ONE-TIME PAYMENT (OTP) (CMS TO STATE) M = ENTITLED TO MEDICAL ASSISTANCE ONLY (MAO), NON-CASH MEMBER (STATE TO CMS) Z = DEEMED CATEGORICALLY NEEDY (STATE TO CMS)
PART D DATA ELEMENTS		
BENE FIRST ELIGIBLE PART D DATE	9(8)	The first date on which a beneficiary became eligible for Medicare Part D, whether or not enrolled in a Medicare Part D plan.
BENE AFF (AFFIRMATIVELY) DEC (DECLINE) INDICATOR	X(1)	Indicates whether a beneficiary chose not to be auto-enrolled by CMS in a Medicare Part D plan. Values: Y = YES N = NO
BENE CO-PAY HISTORY (10 TIMES)		
BENE LIS TYPE	X(1)	A code indicating whether the beneficiary was determined eligible for Low-Income Subsidy or Deemed eligible. Values: L = Low-Income Subsidy (LIS) D = Deemed
BENE COPAY LEVEL	X(1)	An indicator providing the level of copay granted to the beneficiary. Values: If BENE LIS TYPE = L 1 = HIGH 4 = 15% If BENE LIS TYPE = D 1 = HIGH , 2 = LOW , 3 = 0 (ZERO)
BENE COPAY START	9(8)	The effective date of the copay period.

DATE		Format: MMDDCCYY
BENE COPAY END DATE	9(8)	The end date of the copay period. Format: MMDDCCYY
PART D PLAN BENEFIT PACKAGE (10 TIMES)		
BENE CONTRACT NUM (NUMBER)	X(5)	Unique identifications for an agreement between CMS and a managed care organization or PDP sponsor enabling the plan to provide Medicare Part D prescription drug coverage.
BENE PTD PBP ENRLMNT STRT DT	9(8)	The effective date that the beneficiary was enrolled in the Service Elections (PBP). Format: MMDDCCYY
BENE PTD PBP ENRLMNT END DT	9(8)	The end date of the beneficiary's enrollment in the Service Elections (PBP). Format: MMDDCCYY
BENE PTD PBP PLAN ID	X(3)	A unique identifier for the managed care benefit package. For Medicare Part D, this number is a unique identification for an agreement between CMS and a Medicare Part D provider, enabling the Medicare Part D provider to provide prescription drug coverage to eligible beneficiaries.
BENE ENROLL TYPE IND (INDICATOR)	X(1)	An indicator providing the type of enrollment performed. Values: A = Auto-Enrolled B = Beneficiary Election C = Facilitated Enrollment D = System-Generated Enrollment (Rollover)
LOW-INCOME SUBSIDY (TO BE SPECIFIED)		
FILLER	X(50)	These fields are listed and described in future documentation update to states.
REMAINDER OF RECORD		
FILLER	X(61)	These fields are listed and described in future documentation update to states.

3.10.11.3 Trailer Response Record

Field	Size	Description
RECORD IDENT CODE	X(3)	"TRL"
FILE PROCESS TIMESTAMP	9(26)	The exact time that the state file had been processed. Format: CCYY.MM.DD.HH.MM.SS.NNNNNN
FILE CREATE MONTH	9(2)	Create Month of the MMA State File
FILE CREATE YEAR	9(4)	Create Year of the MMA State File
FILE ACCEPT IND	X(1)	Y = The state file had been accepted; N = the state file had not been accepted.
FILLER	X(7)	Spaces.
ORIGINAL STATE TRAILER RECORD 180 BYTES		
RECORD IDENT CODE	X(3)	Always contains value of “MMA”
BENE RECORD COUNT	9(8)	Number of records on the file.
STATE CODE	X(2)	State Code - Valid Code Kentucky KY
CREATE MONTH	9(2)	Month the file is created (for example January=01, December=12)
CREATE YEAR	9(4)	Year the file is created
FILLER	X(161)	Spaces
FILLER	X(2738)	Spaces

3.10.11.4 Part D MMA Enrollment Response File

FIELD NAME	FORMAT	<------POSITION------>	
		START	END
RECORD IDENT CODE	X(03)	0001	0003
FILE PROCESS TIMESTAMP	X(26)	0004	0029
FILE ACCEPT IND	X(01)	0030	0030
FILLER	X(01)	0031	0031
RECORDS TOTAL	9(08)	0032	0039

RECORDS DUPLICATE	9(08)	0040	0047
RECORDS NONDUP	9(08)	0048	0055
RECORDS VALID	9(08)	0056	0063
RECORDS INVALID	9(08)	0064	0071
RECORDS MATCHED	9(08)	0072	0079
RECORDS NOT MATCHED	9(08)	0080	0087
FILE CREATE MONTH	9(02)	0088	0089
FILE CREATE YEAR	9(04)	0090	0093
FILLER	X(22)	0094	0115

***********ORIG STATE HEADER REC 180 characters *******************************

RECORD IDENT CODE	X(03)	0116	0118
STATE CODE	X(02)	0119	0120
CREATE MONTH	9(02)	0121	0122
CREATE YEAR	9(04)	0123	0126
FILLER	X(169)	0127	0295

***********REMAINDER OF RECORD***

FILLER	X(2666)	0296	2961

3.10.11.5 Personal Level Detail Record Physical Layout

FIELD NAME	FORMAT	<------POSITION------> START	END
********ORIGINAL RECORD SUBMITTED BY STATE******************************			
RECORD IDENT CODE	X(03)	0001	0003
ELIGIBILITY MONTH/YEAR	9(06)	0004	0009
ELIGIBILITY STATUS	X(01)	0010	0010
HIC/RRB	X(15)	0011	0025
HIC-RRB IND	X(01)	0026	0026
SOCIAL SECURITY NUM	9(09)	0027	0035
SMA IDENTIFIER	X(20)	0036	0055
FIRST NAME	X(12)	0056	0067

LAST NAME	X(20)	0068	0087
MIDDLE NAME	X(15)	0088	0102
SUFFIX NAME	X(04)	0103	0106
SEX	X(01)	0107	0107
DATE OF BIRTH	9(08)	0108	0115
DUAL STATUS CODE	9(02)	0116	0117
FPL % IND	9(01)	0118	0118
DRUG COVERAGE IND	9(01)	0119	0119
INSTITUTIONAL STATUS IND	X(01)	0120	0120
PART D SUBSIDY APPLICATION APPROVAL CODE	X(01)	0121	0121
PART D SUBSIDY APPRVD/DISAPPRVD DATE	9(08)	0122	0129
PART D SUBSIDY START DATE	9(08)	0130	0137
PART D SUBSIDY END DATE	9(08)	0138	0145
PART D % OF FPL	9(03)	0146	0148
PART D SUBSIDY LEVEL	9(03)	0149	0151
INCOME USED FOR DETERMINATION	X(01)	0152	0152
RESOURCE LEVEL	X(01)	0153	0153
BASIS OF PART D SUBSIDY DENIAL	X(01)	0154	0154
RESULT OF AN APPEAL	X(01)	0155	0155
CHANGE TO PREVIOUS DETERMINATION	X(01)	0156	0156
DETERMINATION CANCLD	X(01)	0157	0157
FILLER	X(23)	0158	0180

********** **ERROR RETURN CODES (ERC)** **********

RECORD IDENT CODE ERC	X(02)	0181	0182

ELIGIBILITY MONTH/YEAR ERC	X(02)	0183	0184
ELIGIBILITY STATUS ERC	X(02)	0185	0186
HIC/RRB ERC	X(02)	0187	0188
HIC-RRB IND ERC	X(02)	0189	0190
SOCIAL SECURITY NUM ERC	X(02)	0191	0192
SEX ERC	X(02)	0193	0194
DATE OF BIRTH ERC	X(02)	0195	0196
DUAL STATUS CODE ERC	X(02)	0197	0198
FPL % IND ERC	X(02)	0199	0200
DRUG COVERAGE IND ERC	X(02)	0201	0202
INSTITUTIONAL STATUS IND ERC	X(02)	0203	0204
PART D SUBSIDY APPLICATION APPROVAL CODE ERC	X(02)	0205	0206
PART D SUBSIDY APPRVD/DISAPPRVD DATE ERC	X(02)	0207	0208
PART D SUBSIDY START DATE ERC	X(02)	0209	0210
PART D SUBSIDY END DATE ERC	X(02)	0211	0212
PART D % OF FPL ERC	X(02)	0213	0214
PART D SUBSIDY LEVEL ERC	X(02)	0215	0216
INCOME USED FOR DETERMINATION ERC	X(02)	0217	0218
RESOURCE LEVEL ERC	X(02)	0219	0220
BASIS OF PART D SUBSIDY DENIAL ERC	X(02)	0221	0222
RESULT OF AN APPEAL ERC	X(02)	0223	0224
CHANGE TO PREVIOUS DETERMINATION ERC	X(02)	0225	0226
DETERMINATION CANCLD			

ERC	X(02)	0227	0228

********** **CMS MBD FILE** **********

RECORD RETURN CODE	X(06)	0229	0234
MEDICARE PART A/B FINDER CODE	X(01)	0235	0235
MEDICARE PART D FINDER CODE	X(01)	0236	0236

*** BENEFICIARY IDENTIFICATION ***

BENE CLM ACNT NUM	X(09)	0237	0245
BENE IDENT CD	X(02)	0246	0247
BENE BIRTH DT	9(08)	0248	0255
BENE DEATH DT	9(08)	0256	0263
BENE SEX IDENT CD	X(01)	0264	0264
BENE GIVN NAME	X(30)	0265	0294
BENE MDL NAME	X(01)	0295	0295
BENE SURN NAME	X(40)	0296	0335

*** CROSS REFERENCE NUMBERS (10 TIMES) ***		0336	0445
XREF BENE CLM ACCT NUM	X(09)		
XREF BENE IDENT CODE	X(02)		

*** SOCIAL SECURITY NUMBERS (5 TIMES) ***		0446	0490
BENE SSN NUM	9(09)		

*** MAILING ADDRESS ***

MLNG ADDR LINE1	X(40)	0491	0530
MLNG ADDR LINE2	X(40)	0531	0570
MLNG ADDR LINE3	X(40)	0571	0610
MLNG ADDR LINE4	X(40)	0611	0650
MLNG ADDR LINE5	X(40)	0651	0690
MLNG ADDR LINE6	X(40)	0691	0730

MLNG ADDR CITY NAME	X(40)	0731	0770
MLNG ADDR STATE CODE	X(02)	0771	0772
MLNG ADDR ZIP CD	X(09)	0773	0781
MLNG ADDR CHG DT	9(08)	0782	0789
*** RESIDENCE ADDRESS ***			
RSDNC ADDR LINE1	X(40)	0790	0829
RSDNC ADDR LINE2	X(40)	0830	0869
RSDNC ADDR LINE3	X(40)	0870	0909
RSDNC ADDR LINE4	X(40)	0910	0949
RSDNC ADDR LINE5	X(40)	0950	0989
RSDNC ADDR LINE6	X(40)	0990	1029
RSDNC ADDR CITY NAME	X(40)	1030	1069
RSDNC ADDR STATE CODE	X(02)	1070	1071
RSDNC ADDR ZIP CD	X(09)	1072	1080
RSDNC ADDR CHG DT	9(08)	1081	1088
*** REPRESENTATIVE PAYEE ***			
BENE REP PAYEE SW	X(01)	1089	1089
*** NON-ENTITLEMENT STATUS ***			
PRT A NENTLMT STUS CODE	X(01)	1090	1090
PRT B NENTLMT STUS CODE	X(01)	1091	1091
*** ENTITLEMENT REASON (5 TIMES) ***		1092	1151
BENE ENTLMT RSN CD			
CHG DT	9(08)		
BENE ENTLMT RSN CD	X(04)		
*** PART A ENTITLEMENT (5 TIMES) ***		1152	1241
BENE PTA ENTLMT STRT DT	9(08)		
BENE PTA ENTLMT END DT	9(08)		

BENE PTA ENRLMT RSN CD	X(01)		
BENE PTA ENTLMT STUS CD	X(01)		
*** PART B ENTITLEMENT (5 TIMES) ***		1242	1331
BENE PTB ENTLMT STRT DT	9(08)		
BENE PTB ENTLMT END DT	9(08)		
BENE PTB ENRLMT RSN CD	X(01)		
BENE PTB ENTLMT STUS CD	X(01)		
*** HOSPICE COVERAGE (5 TIMES) ***		1332	1411
BENE HSPC CVRG STRT DT	9(08)		
BENE HSPC CVRG END DT	9(08)		
*** DISABILITY INSURANCE (3 TIMES) ***		1412	1462
BENE DIB ENTLMT STRT DT	9(08)		
BENE DIB ENTLMT END DT	9(08)		
BENE DIB ENTLMT DT			
JSTFCTN CD	X(01)		
*** GROUP HEALTH ORGANIZATION (10 TIMES) ***		1463	1672
BENE GHO ENRLMT STRT DT	9(08)		
BENE GHO ENRLMT END DT	9(08)		
BENE GHO CNTRCT NUM	X(05)		
*** MBD PLAN BENEFITS PACKAGE ELECTION (10 TIMES) ***			
		1673	1962
MBD GHP ENRL EFCTV DT	9(08)		
MBD PBP STRT DT	9(08)		
MBD PBP END DT	9(08)		
MBD PBP NUM	X(03)		
MBD PBP CVRG TYPE CD	X(02)		

*** END STAGE RENAL DISEASE COVERAGE ***			
BENE ESRD CVRG STRT DT	9(08)	1963	1970
BENE ESRD CVRG END DT	9(08)	1971	1978
BENE ESRD TRMNTN RSN CD	X(01)	1979	1979
*** END STAGE RENAL DISEASE DIALYSIS ***			
BENE ESRD DLYS STRT DT	9(08)	1980	1987
BENE ESRD DLYS END DT	9(08)	1988	1995
*** END STAGE RENAL DISEASE TRANSPLANT ***			
BENE ESRD TRNSPLNT STRT DT	9(08)	1996	2003
BENE ESRD TRNSPLNT END DT	9(08)	2004	2011
*** THIRD PARTY PART A HISTORY (5 TIMES) ***		2012	2111
BENE PTA TP STRT DT	9(08)		
BENE PTA TP PRM PYR CD	X(03)		
BENE PTA TP END DT	9(08)		
BENE PTA TP BUYIN ELGBLTY CD	X(01)		
*** THIRD PARTY PART B HISTORY (5 TIMES) ***		2112	2211
BENE PTB TP STRT DT	9(08)		
BENE PTB TP PRM PYR CD	X(03)		
BENE PTB TP TRMNTN DT	9(08)		
BENE PTB TP BUYIN ELGBLTY CD	X(01)		
*** PART D DATA ELEMENTS ***			
BENE FIRST ELIGIBLE PART D DATE	9(08)	2212	2219

BENE AFF DECL IND	X(01)	2220	2220
(BENE PTD OPT OUT IND)			
****BENE COPAY HISTORY(10 TIMES)****		2221	2400
BENE COPAY TYPE	X(01)		
BENE COPAY LEVEL	X(01)		
BENE COPAY START DATE	9(08)		
BENE COPAY END DATE	9(08)		
****PART D PLAN BENEFIT PACKAGE(10 TIMES)		2401	2650
BENE CONTRACT NUM	X(05)		
BENE PTD PBP ENRLMNT STRT DT	9(08)		
BENE PTD PBP ENRLMNT END DT	9(08)		
BENE PTD PBP PLAN ID	X(03)		
BENE ENROLL TYPE IND	X(01)		
FILLER	X(250)	2651	2900
SECONDARY MATCH IND	X(01)	2901	2901
SPD CALCULATION IND	X(01)	2902	2902
*** REMAINDER OF RECORD ***			
FILLER	X(59)	2903	2961

3.10.11.6 File Summary Record Physical Layout

FIELD NAME	FORMAT	<------POSITION------>	
		START	END
REC IDENT CODE	X(03)	0001	0003
STATE CODE	X(02)	0004	0005
FILE PROCESS TIMESTAMP	X(26)	0006	0031
FILE CREATE MONTH	9(02)	0032	0033
FILE CREATE YEAR	9(04)	0034	0037
RECORDS TOTAL	9(08)	0038	0045
RECORDS DUPLICATE	9(08)	0046	0053

RECORDS NONDUP	9(08)	0054	0061
RECORDS VALID	9(08)	0062	0069
RECORDS INVALID	9(08)	0070	0077
RECORDS MATCH	9(08)	0078	0085
RECORDS NOT MATCHED	9(08)	0086	0093
FILLER	X(01)	0094	0094
FILLER	X(20)	0095	0114
FILLER	X(26)	0115	0140
VALID DUAL RECORDS	9(08)	0141	0148
VALID DUAL MATCHES	9(08)	0149	0156
VALID DUAL NONMATCHES	9(08)	0157	0164
VALID LIS RECORDS	9(08)	0165	0172
VALID CURRENT DUALS	9(08)	0173	0180
VALID RETRO DUALS	9(08)	0181	0188
TOTAL ELIG MONTHS	9(02)	0189	0190
TOTAL VALID PRO RECORDS	9(08)	0191	0198
TOTAL INVALID PRO RECORDS	9(08)	0199	0206
TOTAL MATCHED PRO RECORDS	9(08)	0207	0214
FILLER	X(2747)	0215	2961

3.10.11.7 Monthly Summary Record Physical Layout (one generated for each eligibility month found in the file)

FIELD NAME	FORMAT	<------POSITION------>	
		START	END
REC IDENT CODE	X(03)	0001	0003
STATE CODE	X(02)	0004	0005
FILE PROCESS TIMESTAMP	X(26)	0006	0031
FILE CREATE MONTH	9(02)	0032	0033
FILE CREATE YEAR	9(04)	0034	0037
ELIGIBILITY MONTH	9(02)	0038	0039
ELIGIBILITY YEAR	9(04)	0040	0043
CALCULATION SWITCH	X(01)	0044	0044
TOTAL VALID RECORDS	9(08)	0045	0052

TOTAL VALID FULL DUAL RECORDS	9(08)	0053	0060
TOTAL VALID NON-FULL DUAL RECORDS	9(08)	0061	0068
NET TOTAL VALID FULL DUAL ENROLLMENTS	9(08)	0069	0076
NET TOTAL VALID FULL DUAL DISENROLLMENTS	9(08)	0077	0084
FILLER	X(2877)	0085	2961

3.10.11.8 Trailer Record Physical Layout

FIELD NAME	FORMAT	<------POSITION------> START	END
RECORD IDENT CODE	X(03)	0001	0003
FILE PROCESS TIMESTAMP	9(26)	0004	0029
FILE CREATE MONTH	9(02)	0030	0031
FILE CREATE YEAR	9(04)	0032	0035
FILE ACCEPT IND	X(01)	0036	0036
FILLER	X(07)	0037	0043
***********ORIG STATE TRAILER REC 180 characters *******************************			
RECORD IDENT CODE	X(03)	0044	0046
BENE RECORD COUNT	9(08)	0047	0054
STATE CODE	X(02)	0055	0056
CREATE MONTH	9(02)	0057	0058
CREATE YEAR	9(04)	0059	0062
FILLER	X(161)	0063	0223
***********REMAINDER OF RECORD**			
FILLER	X(2738)	0224	2961

3.10.11.9 Header Record Data Element Specifications

RECORD IDENT CODE	"SRF"

FILE PROCESS TIMESTAMP	Format: YYYY.MM.DD.hh.mm.ss.nnnn YYYY = Year; MM = Month; DD = Day; hh = hour; mm = minute; ss = second; nnnnnn = microsecond The exact time that the state file had been processed.
FILE ACCEPT IND	Y = The state file had been accepted; N = the state file had not been accepted.
FILLER	Filler.
RECORDS TOTAL	The total number of detail records in the state file. RECORDS VALID + RECORDS INVALID = RECORDS TOTAL. RECORDS MATCHED + RECORDS NOT MATCHED = RECORDS TOTAL. This total does not include PRO records.
RECORDS DUPLICATE	The total number of duplicate detail records found in the state file. This count does not include PRO records.
RECORDS NONDUP	The total number of non-duplicate valid detail records found in the state file. This count does not include PRO records.
RECORDS VALID	The total number of valid detail records found in the file. Valid records are non-duplicate and provide valid essential information. See also Person-Level Record Data Element Specifications: Error Return Codes (ERC) Additionally, a detail record is considered Invalid if it does not have one of the following combinations of identifying information: - HICN or RRB, Social Security Number, Date of Birth - HICN or RRB, Date of Birth - Social Security Number, Date of Birth This count does not include PRO records.
RECORDS INVALID	The total number of invalid detail records found in the file See also Person-Level Record Data Element Specifications: Error Return Codes (ERC) This count does not include PRO records.

RECORDS MATCHED	The total number of detail records that could be matched successfully to an individual on the Medicare Beneficiary Database. This count does not include PRO records.
RECORDS NOT MATCHED	The total number of detail records that could not be matched successfully to an individual on the Medicare Beneficiary Database. This count includes Invalid detail records because no match is attempted on an invalid detail record. This count does not include PRO records.
FILE CREATE MONTH	Month Code for Current Month – Valid Values (01 – 12)Calendar Month equals Month the file is created (for example January=01, December=12) Create Month of the MMA State File
FILE CREATE YEAR	Year Code for Current Year – that is 2006 Current Year equals Calendar Year the file is created Create Year of the MMA State File
FILLER	
**********	ORIGINAL STATE HEADER RECORD 180 BYTES
RECORD IDENT CODE	Always contains value of “MMA”
STATE CODE	State Code - Valid Code Alabama AL Alaska Arizona AZ Arkansas AR California CA Colorado CO Connecticut CT Delaware DE District of Columbia DC Florida

	Georgia GA Hawaii HI Idaho Illinois Indiana IN Iowa Kansas KS Kentucky KY Louisiana LA Maine Maryland MD Massachusetts MA Washington Michigan MI Minnesota MN Mississippi MS
CREATE MONTH	Month Code for Current Month – Valid Values (01 – 12)Calendar Month equals Month the file is created (for example January=01, December=12)
CREATE YEAR	Year Code for Current Year – that is 2006 Current Year equals Calendar Year the file is created
FILLER	
**********	REMAINDER OF RECORD
FILLER	

3.10.11.10 Personal Level Detail Record Data Element Specifications

**********	ORIGINAL RECORD SUBMITTED BY STATE
RECORD IDENT CODE	Identifies record transaction type. Code as "DET" for an enrollment detail record, "PRO" for a prospective Dual Eligible records, and "LIS" is for a low-income subsidy determination. Each record type requires completion of different fields. Whether a field is required for each record type is indicated in the Record-Type = DET or LIS indication in the field specifications. PRO records require the same fields as DET records. For fields not applicable for the

	record type specified, code the field with the appropriate default or unknown value (for example, “9” fill) Essential field for detail record Validity (See RECORD IDENTIFIER ERC)
ELIGIBILITY MONTH/YEAR	Applicable to RECORD TYPE – DET, PRO Format :MMCCYY Calendar Month/Year Code for applicable Medicaid eligibility (for example012006). Valid Month Values: 01 – 12 (for example January=01, December=12.) OR 999999 for a LIS record For retroactive records use effective month of the changes for each record. Retroactive changes must be submitted to reflect prior-month changes in the following fields: - ELIGIBILITY STATUS - HIC/RRB - HIC-RRB IND - SOCIAL SECURITY NUM - SEX - DATE OF BIRTH - DUAL STATUS CODE - FPL % IND - INSTITUTIONAL STATUS IND Retro active records must include replacement values for ALL fields for that record, NOT just the field(s) that have changed. Essential field for DET detail record Validity (See ELIGIBILITY MONTH/YEAR ERC)
ELIGIBILITY STATUS	Applicable to RECORD TYPE – DET, PRO Indicator of beneficiary’s Medicaid eligibility for that person-month – Valid values “Y” (yes) or “N” (no) or 9 for a LIS record ‘N’ should not be submitted for current month dual

	eligibles This field requires the value 'Y' for a PRO detail record, or the detail record is rejected. Essential field for DET detail record Validity (See ELIGIBILITY STATUS ERC)
HIC/RRB	Applicable to RECORD TYPE – DET, LIS, PRO Either the Health Insurance Claim Number (HIC) or the Railroad Retirement Board Number (RRB), whichever the state has active and available for the beneficiary. (NOTE: Alphanumeric Field – LEFT JUSTIFIED) Critical field for detail record Validity (See HIC ERC)
HIC-RRB IND	Applicable to RECORD TYPE – DET, LIS, PRO Indicator for HIC or RRB – Valid Values: "R" for RRB and "H" for HIC; Indicates the type of value populating the HIC field above. This field is not used by CMS.
SOCIAL SECURITY NUMBER	Applicable to RECORD TYPE – DET, LIS, PRO Beneficiary's own Social Security Number Critical for detail record Validity (See SOCIAL SECURITY NUMBER ERC)
SMA IDENTIFIER	Applicable to RECORD TYPE – DET, LIS, PRO State Medicaid Agency Enrollee Identifier for the beneficiary – For use by state in associating records on Enrollment Return File.
FIRST NAME	Applicable to RECORD TYPE – DET, LIS, PRO Beneficiary First Name (First 12 letters)
LAST NAME	Applicable to RECORD TYPE – DET, LIS, PRO Beneficiary Last Name (First 20 letters)
MIDDLE NAME	Applicable to RECORD TYPE – DET, LIS, PRO Beneficiary Middle Name (First 15 letters)
SUFFIX NAME	Applicable to RECORD TYPE – DET, LIS, PRO Beneficiary Suffix Name (First 4 letters)for example, JR,

	III
SEX	Applicable to RECORD TYPE – DET, LIS, PRO Beneficiary Gender – Sex code values F=Female, M=Male, 9=Unknown
DATE OF BIRTH	Applicable to RECORD TYPE – DET, LIS, PRO MMDDCCYY: Month, day, century and year of Beneficiary Birth, (for example 05051935). If unknown = '99999999' Critical field for detail record Validity (See DATE OF BIRTH ERC)
DUAL STATUS CODE	Applicable to RECORD TYPE – DET, PRO 01 = Eligible is entitled to Medicare- QMB only 02 = Eligible is entitled to Medicare- QMB AND Full Medicaid coverage 03 = Eligible is entitled to Medicare- SLMB only 04 = Eligible is entitled to Medicare- SLMB AND Full Medicaid coverage 05 = Eligible is entitled to Medicare- QDWI 06 = Eligible is entitled to Medicare- Qualifying individuals 08 = Eligible is entitled to Medicare- Other Full Dual Eligibles (Non QMB, SLMB,QWDI or QI)with Full Medicaid coverage 09 = Eligible is entitled to Medicare – Other Dual Eligibles but without Medicaid coverage, includes Pharmacy Plus and 1115 drug-only demonstration. If unknown = 99. NOTE: For prospective enrollment (PRO) records, include a dual eligible code for full dual eligible status which best describes the dual status assuming that individual is Medicare eligible; that is, codes 02-QMB plus, 04-SLMB plus, or 08-Other.
FPL% IND	Applicable to RECORD TYPE – DET, PRO Federal Poverty Level Indicator. Values: 1=at or below 100% FPL, 2=above 100% FPL. FPL is determined by the individual state.

	If unknown = 9. Include income based on the eligibility intake system, but do not derive this field from the Dual Status Code. If it is necessary to replace unknown FPL% IND values, CMS derives the value using consistent rules.
DRUG COVERAGE IND	Applicable to RECORD TYPE – DET, PRO This field is not used by CMS. Effective January 2006, code this field as 9. For months prior to January 2006 the values submitted were: 0=no drug coverage by Medicaid; 1= Medicaid drug coverage. If unknown = 9.
INSTITUTIONAL STATUS IND	Applicable to RECORD TYPE – DET, PRO Indicator of NURSING FACILITY, INTERMEDIATE CARE FACILITY/MENTALLY RETARDED or INPATIENT PSYCHIATRIC HOSPITAL: Values “Y” or “N”. If unknown = “9”. Code this field as “Y” (yes) only when the individual is institutionalized (or projected to be for the current month) for the entire span of eligibility for the month.
PART D SUBSIDY APPLICATION APPROVAL CODE	Applicable to RECORD TYPE – LIS Identifies whether application was approved or not. Approved code values Y=yes, N=no , N/A=9 Essential for LIS detail record Validity (See PART D SUBSIDY APPRVD ERC)
PART D SUBSIDY APPRVD/DISAPPRVD DATE	Applicable to RECORD TYPE – LIS Approved date MMDDCCYY. N/A=‘99999999’ if unknown. Essential for LIS detail record Validity (See PART D SUBSIDY APPRVD DATE ERC)
PART D SUBSIDY START DATE	Applicable to RECORD TYPE – LIS Subsidy Start Date MMDDCCYY. N/A= ‘99999999’. May not be earlier than 01/01/2006. Must be first day of

	the month in which application received by state. Essential for LIS detail record Validity (See PART D SUBSIDY START DATE ERC)
PART D SUBSIDY END DATE	Applicable to RECORD TYPE – LIS Subsidy End Date MMDDCCYY; for determinations through 2006, end date is 12/31/2006. Thereafter, end date is determined by state, in manner and frequency state determines. N/A='99999999'.
PART D % OF FPL	Applicable to RECORD TYPE – LIS For those individuals who apply for the low income subsidy, identify the specific percent of Federal Poverty Level, as defined by Federal LIS income determination policy. Do not fill this out for those individuals who receive any Medicaid benefits, including payment of Medicare cost-sharing obligations. N/A='999'.
PART D SUBSIDY LEVEL	Applicable to RECORD TYPE – LIS Identifies portion of Part D premium subsidized, based on sliding scale linked to %FPL. If person is under 135% FPL, enter 100. If person is 136-140% FPL, enter 075. If person is 141-145% FPL, enter 050. If person is 146-149% FPL, enter 025. If person has 150% FPL, enter 000. N/A='999'.
INCOME USED FOR DETERMINATION	Applicable to RECORD TYPE – LIS Income Used Indicator 1=Individual, 2=Couple N/A='9'
RESOURCE LEVEL	Applicable to RECORD TYPE – LIS Resource Level 1=over limit, 2=under limit N/A='9'.
BASIS OF PART D SUBSIDY DENIAL	Applicable to RECORD TYPE – LIS Denial codes: 1 = NAB (Not enrolled in Medicare Part A or B); 2 = NUS (Does not reside in the USA); 3 = FTC (Failure to cooperate); 4 = RES (Resources too high); 5 = INC (Income too high);

	9 = N/A
RESULT OF AN APPEAL	Applicable to RECORD TYPE – LIS Appeal Result Y=yes, N=no (Only populated if appeal is filed). N/A='9'.
CHANGE TO PREVIOUS DETERMINATION	Applicable to RECORD TYPE – LIS Change to Previous Determination Indicator Y=yes, N=no. Enter Y if this record changes a determination sent in a previous transmission. Default is N. N/A='9'.
DETERMINATION CANCLD	Applicable to RECORD TYPE – LIS Cancelled Indicator Y=yes, N=no. Default is N. Enter Y if this record cancels previous record sent. N/A='9'.
FILLER	
**********	ERROR RETURN CODES (ERC)
RECORD IDENT CODE ERC	If this field is invalid, the detail record is invalid. 00: Value is Valid 01: Invalid - Value is not in Valid Value Set
ELIGIBILITY MONTH/YEAR ERC	If this field is invalid, the DET detail record is invalid. If this field is invalid, the PRO detail record is invalid. 00: Value is Valid 02: Invalid - Value is not Numeric 04: Invalid - Date is Unknown 10: Invalid - Value is Future 11: Invalid - Month value is not between 01 and 12 inclusive 20: Invalid - Year value is before 2004 05: Invalid – PRO record Eligibility month/Year not Current Month/Year 99: Not Scanned - LIS Record
ELIGIBILITY STATUS ERC	If this field is invalid, the DET detail record is invalid. If this field is invalid, the PRO detail record is invalid. 00: Value is Valid 01: Invalid - Value is not in Valid Value Set

	06 – Invalid – PRO record Eligibility Status not = Y 99: Not Scanned - LIS Record
HIC/RRB ERC	00: Value is Valid 01: Invalid - Value is not in Valid Value Set 03: Invalid - Field is Empty Critical Identification field: Additionally, a detail record is considered Invalid if it does not have one of the following combinations of identifying information: - HICN or RRB, Social Security Number, Date of Birth - HICN or RRB, Date of Birth - Social Security Number, Date of Birth
HIC-RRB-IND ERC	00: Value is Valid 01: Invalid - Value is not in Valid Value Set
SOCIAL SECURITY NUM ERC	00: Value is Valid 01: Invalid - Value is not in Valid Value Set 02: Invalid - Value is not Numeric 03: Invalid - Field is Empty Critical Identification field: Additionally, a detail record is considered Invalid if it does not have one of the following combinations of identifying information: - HICN or RRB, Social Security Number, Date of Birth - HICN or RRB, Date of Birth - Social Security Number, Date of Birth
SEX ERC	00: Value is Valid 01: Invalid - Value is not in Valid Value Set

DATE OF BIRTH ERC	00: Value is Valid 02: Invalid - Value is not Numeric 04: Invalid - Date is Unknown 10: Invalid - Value is Future 11: Invalid - Month value is not between 01 and 12 inclusive 12: Invalid - Day value is out of range 21: Warning - Year is before 1899 Critical Identification field: Additionally, a detail record is considered Invalid if it does not have one of the following combinations of identifying information: - HICN or RRB, Social Security Number, Date of Birth - HICN or RRB, Date of Birth - Social Security Number, Date of Birth
DUAL STATUS CODE ERC	If this field is invalid, the PRO detail record is invalid. 00: Value is Valid 01: Invalid - Value is not in Valid Value Set 40: Warning - Value is 99 for Dual Eligible record 07: Invalid – PRO record with Dual Status not Full Dual 99: Not Scanned - LIS record
FPL % IND ERC	00: Value is Valid 01: Invalid - Value is not in Valid Value Set 99: Not Scanned - LIS record
DRUG COVERAGE IND ERC	00: Value is Valid 01: Invalid - Value is not in Valid Value Set 99: Not Scanned - LIS record
INSTITUTIONAL STATUS IND ERC	00: Value is Valid 01: Invalid - Value is not in Valid Value set 99: Not Scanned - LIS record
PART D SUBSIDY	If this field is invalid, the LIS detail record is invalid.

APPLICATION APPROVAL CODE ERC	00: Value is Valid 01: Invalid - Value is not in Valid Value set 98: Not Scanned – DET or PRO record
PART D SUBSIDY APPRVD/DISAPPRVD DATE ERC	If this field is invalid, the LIS detail record is invalid. 00: Value is Valid 02: Invalid - Value is not Numeric 04: Invalid - Date is Unknown 10: Invalid - Value is Future 11: Invalid - Month value is not between 01 and 12 inclusive 12: Invalid - Day value is out of range 31: Invalid - Value is later than Part D Subsidy End Date 98: Not Scanned – DET or PRO record
PART D SUBSIDY START DATE ERC	If this field is invalid, the LIS detail record is invalid. 00: Value is Valid 02: Invalid - Value is not Numeric 04: Invalid - Date is Unknown 10: Invalid - Value is Future 11: Invalid - Month value is not between 01 and 12 inclusive 12: Invalid - Day value is out of range 31: Invalid - Value is later than Part D Subsidy End Date 36: Invalid – Value is earlier than January 1, 2006 37: Warning - Day value is not first day of the month 98: Not Scanned – DET or PRO record
PART D SUBSIDY END DATE ERC	00: Value is Valid 02: Invalid - Value is not Numeric 04: Invalid - Date is Unknown 11: Invalid - Month value is not between 01 and 12 inclusive 12: Invalid - Day value is out of range

	33: Invalid - Value is earlier than Part D Subsidy Approved/Disapproved Date 34: Invalid - Value is earlier than Part D Subsidy Start Date 35: Invalid - Value is earlier than Part D Subsidy Approved/Disapproved Date and Part D Subsidy Start Date 98: Not Scanned – DET or PRO record
PART D % OF FPL ERC	00: Value is Valid 02: Invalid - Value is not Numeric. 98: Not Scanned – DET or PRO record
PART D SUBSIDY LEVEL ERC	00: Value is Valid 01: Invalid - Value is not in Valid Value set 98: Not Scanned – DET or PRO record
INCOME USED FOR DETERMINATION ERC	00: Value is Valid 01: Invalid - Value is not in Valid Value set 98: Not Scanned – DET or PRO record
RESOURCE LEVEL ERC	00: Value is Valid 01: Invalid - Value is not in Valid Value set 98: Not Scanned – DET or PRO record
BASIS OF PART D SUBSIDY DENIAL ERC	00: Value is Valid 01: Invalid - Value is not in Valid Value set 98: Not Scanned – DET or PRO record
RESULT OF AN APPEAL ERC	00: Value is Valid 01: Invalid - Value is not in Valid Value set 98: Not Scanned – DET or PRO record
CHANGE TO PREVIOUS DETERMINATION ERC	00: Value is Valid 01: Invalid - Value is not in Valid Value Set 98: Not Scanned – DET or PRO record
DETERMINATION CANCLD ERC	00: Value is Valid 01: Invalid - Value is not in Valid Value Set

	98: Not Scanned DET or PRO record
**********	CMS MBD FILE
RECORD RETURN CODE	This field is an assessment of the detail record. 000000: Record is Valid no errors. 000001: Record is Valid with errors. 000002: Record is Invalid: Invalid Record Identification Code. 000003: Record is Invalid: Insufficient Valid Identifying Information [May potentially indicate a mismatch on the submitted date of birth.] 000004: Record is Invalid: DET Record - Invalid Key Fields 000005: Record is Invalid: LIS Record - Invalid Key Fields 000006: Record is Invalid: DET Record - Duplicate 000007: Record is Invalid: LIS Record - Duplicate 000008: Record is Invalid: Input Record is Incorrect Length 000009: Record is Invalid: PRO Record – Invalid Key Fields 000010: Record is Invalid: PRO Record – Invalid is PRO Duplicate 000011: Record is Invalid: PRO Record – Invalid is DET Duplicate
MEDICARE PART A/B FINDER CODE	For Dual Eligible (DET) records and Prospective Full Dual (PRO) records, this field indicates the presence of Medicare Part A and/or Medicare Part B entitlement during the Eligibility Month/Year. For Low-Income Subsidy (LIS) records, this field indicates the presence of Medicare Part A and/or Medicare Part B entitlement during the first month of the Subsidy period as given by the Part D Subsidy Approved/Disapproved Date. Values: 0 = The person had Medicare Part A and/or Medicare Part B 1 = The person had neither Medicare Part A nor

	Medicare Part B. NOTE: For Eligibility Month/Eligibility Year values January 2006 and later, this field equates to Medicare Part D Eligibility. For example, if the Eligibility Month/Year is 112005, this field would not indicate Medicare Part D Eligibility.
MEDICARE PART D FINDER CODE	For Dual Eligible (DET) records and Prospective Full Dual (PRO) records, this field indicates the presence of Medicare Part D enrollment during the Eligibility Month/Year. For Low-Income Subsidy (LIS) records, this field indicates the presence of Medicare Part D enrollment during the first month of the Subsidy period as given by the Part D Subsidy Approved/Disapproved Date. Values: 0 = The person had Medicare Part D 1 = The person did not have Medicare Part D
**********	BENEFICIARY IDENTIFICATION This remainder of the record is populated if the person was found in the CMS Medicare information systems. A person is found in the CMS Medicare information systems if they have Medicare. If the person is not found successfully in the CMS Medicare information systems, then the remainder of the record is populated with SPACES (alphanumeric fields) and ZEROS (numeric fields).
BENE CLM ACNT NUM	The number identifying the primary Medicare Beneficiary under the SSA or RRB programs. This number along with the Beneficiary Identification Code uniquely identifies a Medicare Beneficiary.
BENE IDENT CD	A code that is used in conjunction with the Beneficiary Claim Account Number to uniquely identify a Medicare Beneficiary. The BIC Code establishes the beneficiary's relationship to a primary Social Security Administration (SSA) or Railroad Retirement Board (RRB) wage earner and is used to justify entitlement to Medicare benefits.
BENE BIRTH DT	The date of birth of the Medicare Beneficiary. MMDDCCYY: Month, day, century and year
BENE DEATH DT	The date of death of the Medicare Beneficiary.

	MMDDCCYY: Month, day, century and year
BENE SEX IDENT CD	Represents the sex of the Medicare Beneficiary. Examples include: Male and Female Valid values: 0 = Unknown 1 = Male
BENE GIVN NAME	The first name of the Medicare beneficiary.
BENE MDL NAME	The middle initial of the Medicare Beneficiary middle name.
BENE SURN NAME	The last name (surname) of the Medicare Beneficiary including any following titles.
**********	CROSS REFERENCE MEDICARE NUMBERS (10 OCCURRENCES) First occurrence is the active/most recent cross-reference Medicare number.
XREF BENE CLM ACCT NUM	An additional beneficiary claim account number associated with the Medicare Beneficiary. The beneficiary's entitlement has been cross-referenced from this number to the beneficiary's active claim account number. (Audited records are invalidated)
XREF BENE IDENT CODE	The beneficiary's identification code associated with the Medicare Beneficiary's cross-referred claim account number.
**********	SOCIAL SECURITY NUMBERS (5 OCCURRENCES) First occurrence is the active/most recent Social Security Number.
BENE SSN NUM	The beneficiary's identification number that was assigned by the Social Security Administration.
**********	MAILING ADDRESS This may be the address of a rep-payee where that represents the official mailing address.
MLNG ADDR LINE 1	The first line of the address.
MLNG ADDR LINE 2	The second line of the street address.
MLNG ADDR LINE	The third line of the street address.

3	
MLNG ADDR LINE 4	The fourth line of the mailing address.
MLNG ADDR LINE 5	The fifth line of the mailing address.
MLNG ADDR LINE 6	The sixth line of the mailing address.
MLNG ADDR CITY NAME	The name of the city for the Medicare Beneficiary's residence, or temporary residence and/or mailing address.
MLNG ADDR STATE CODE	The beneficiaries' postal state code.
MLNG ADDR ZIP CODE	The zip code associated with the address
MLNG ADDR CHG DT	The date a new or corrected address becomes effective for a Medicare Beneficiary. MMDDCCYY: Month, day, century and year
**********	RESIDENCE ADDRESS The Residence address is NOT currently being used nor is it being populated
RSDNC ADDR LINE 1	The first line of the address.
RSDNC ADDR LINE 2	The second line of the street address.
RSDNC ADDR LINE 3	The third line of the street address.
RSDNC ADDR LINE 4	The fourth line of the mailing address.
RSDNC ADDR LINE 5	The fifth line of the mailing address.
RSDNC ADDR LINE 6	The sixth line of the mailing address.
RSDNC ADDR CITY NAME	The name of the city for the Medicare Beneficiary's residence, or temporary residence and/or mailing address.
RSDNC ADDR	The beneficiaries' postal state code.

STATE CODE	
RSDNC ADDR ZIP CODE	The zip code associated with the address
RSDNC ADDR CHG DT	The date a new or corrected address becomes effective for a Medicare Beneficiary. MMDDCCYY: Month, day, century and year
**********	REPRESENTATIVE PAYEE
BENE REP PAYEE SW	A switch that indicates whether the beneficiary has a Representative Payee for social security cash benefit purposes. Values: Space or N = Field is not applicable, no rep payee indicated Y = Beneficiary has designated a representative payee
**********	MEDICARE NON-ENTITLEMENT STATUS
PRT A NENTLMT STUS CODE	The reason for a beneficiary's current non-entitlement to Part A Medicare Benefits. Values: D = Coverage was denied F = Terminated due to invalid enrollment or enrollment voided H = Not eligible for free Part A, or did not enroll for premium Part A R = Refused benefits N Not a valid SSA HIC, but used by CMS' Third Party system to indicate a potential PTA entitlement date N = Not a valid SSA HIC, but used by CMS' Third Party system to indicate a potential PTA entitlement date This field may have the value SPACE if no non-entitlement reason applies to the beneficiary.
PRT B NENTLMT STUS CODE	The reason for a beneficiary's current non-entitlement to Part B Medicare Benefits. Values: D = Coverage was denied N = No (Foreign/Puerto Rican beneficiary not

	entitled to SMI) Also, dually/technically, beneficiary is not entitled to SMI. R = Refused benefits This field may have the value SPACE if no non-entitlement reason applies to the beneficiary.
**********	MEDICARE ENTITLEMENT REASON (5 OCCURRENCES) This section is not presently populated.
BENE ENTLMT RSN CD CHG DT	The date that the reason for entitlement was changed for a beneficiary. This is not the effective date of entitlement. MMDDCCYY: Month, day, century and year
BENE ENTLMT RSN CD	This code identifies the reason for the beneficiary's entitlement to Medicare Benefits. Values are: 0 = Beneficiary insured due to age (OASI); 1 = Beneficiary insured due to disability; 2 = Beneficiary insured due to End Stage; Renal Disease (ESRD); 3 = Beneficiary insured due to disability and current ESRD.
**********	MEDICARE PART A ENTITLEMENT (5 OCCURRENCES) First occurrence is the active/most recent Medicare Part A entitlement.
BENE PTA ENTLMT STRT DT	The date a beneficiary became entitled to Medicare Benefits. MMDDCCYY: Month, day, century and year This field is populated with zeros if no entitlement period is found.
BENE PTA ENTLMT END DT	The Medicare program entitlement termination date for a beneficiary. The last day that a beneficiary is entitled to benefits. After this day the benefits are terminated. MMDDCCYY: Month, day, century and year If this field and the Entitlement Start Date are both populated with zeros, then no entitlement period was found. If this field is populated with zeros and the entitlement start date is a valid date, then the entitlement

	period is not ended.
BENE PTA ENRLMT RSN CD	This code is used by SSA to reflect information about a specific Part A enrollment is based upon equitable relief (and Medicare's usual business rules for Part B start Date may not be appropriate) Values: A = Attainment of age 65 B = Equitable relief D = Disability G = General Enrollment Period I = Initial Enrollment Period J = MQGE Entitlement K = Renal disease is or was a reason for entitlement prior to age 65 or 25th month of disability L = Late filing M = Termination based on renal entitlement but entitlement based on disability continues N = Age 65 and uninsured P = Potentially insured beneficiary is enrolled for Medicare coverage only Q = Quarters of coverage requirements are involved R = Residency requirements are involved T = Disabled working individual U = Unknown Blank = Not applicable This field is populated with SPACE if no entitlement period is found
BENE PTA ENTLMT STUS CD	Represent the Medicare Part A entitlement status for a beneficiary. Values are: E = Free Part A Entitlement G = Entitled due to good cause Y = Currently entitled, premium is payable

	Valid values when Part A Entitlement Effective date and Termination Date are present: C = No longer entitled due to disability cessation S = Terminated, no longer entitled under ESRD provision T = Terminated for non-payment of premiums W = Voluntary withdrawal from premium coverage X = Free Part A terminated or refused HI Valid Values when there is no Part A Entitlement date (and no Part A termination date): D = COVERAGE WAS DENIED F = TERMINATED DUE TO INVALID ENROLLMENT OR ENROLLMENT VOIDED H = NOT ELIGIBLE FOR FREE PART A, OR DID NOT ENROLL FOR PREMIUM PART A R = REFUSED BENEFITS N = NOT A VALID SSA HOC, BUT USED BY HCFA'S THIRD PARTY SYSTEM TO INDICATE A 'POTENTIAL' PTA ENTITLEMENT DATE This field is populated with SPACE if no entitlement period is found.
**********	MEDICARE PART B ENTITLEMENT (5 OCCURRENCES) First occurrence is the active/most recent Medicare Part B entitlement.
BENE PTB ENTLMT STRT DT	The date a beneficiary became entitled to Medicare Benefits. MMDDCCYY: Month, day, century and year This field is populated with zeros if no entitlement period is found.
BENE PTB ENTLMT END DT	The Medicare program entitlement termination date for a beneficiary. The last day that a beneficiary is entitled to benefits. After this day the benefits are terminated.

	MMDDCCYY: Month, day, century and year If this field and the Entitlement Start Date are both populated with zeros, then no entitlement period was found. If this field is populated with zeros and the entitlement start date is a valid date, then the entitlement period is not ended.
BENE PTB ENRLMT RSN CD	This code is used by SSA to reflect information about a specific Part B enrollment is based upon equitable relief (and Medicare's usual business rules for Part B start Date may not be appropriate) Valid values: B = Equitable relief C = Good Cause D = Deemed date of birth F = Working Aged G = General enrollment period I = Initial enrollment period K = Renal disease is or was a reason for entitlement prior to age 65 or 25th month of disability M = Termination based on renal entitlement but entitlement based on disability continues R Residency requirements are involved S = State Buy-In U = Unknown This field is populated with SPACE if no entitlement period is found
BENE PTB ENTLMT STUS CD	This code represents the Part B Medicare entitlement status for a beneficiary. Valid values when Part B Entitlement Effective date is present and Termination Date is blank: G Entitled due to good cause Y Currently entitled, premium is payable Valid values when Part B Entitlement Effective date and Termination Date are present: C No longer entitled due to disability cessation F Terminated due to invalid enrollment or enrollment

	voided S Terminated, no longer entitled under ESRD provision T Terminated for non-payment of premiums W Voluntary withdrawal from premium coverage Valid Values when there is no Part B entitlement date (and no Part B termination date): D = COVERAGE WAS DENIED N = NO (FOREIGN/PUERTO RICAN BENEFICIARY NOT ENTITLED TO SMI. ALSO DUALLY/TECHNICALLY BENEFICIARY IS NOT ENTITLED TO SMI) R = REFUSED BENEFITS This field is populated with SPACE if no entitlement period is found.
**********	HOSPICE COVERAGE (5 OCCURRENCES) First occurrence is the active/most recent Hospice coverage.
BENE HSPC CVRG STRT DT	The elected start date of a beneficiary's period of Hospice Coverage. MMDDCCYY: Month, day, century and year This field is populated with zeros if no Medicare Hospice coverage period is found.
BENE HSPC CVRG END DT	The termination date of a beneficiary's period of Hospice Coverage. MMDDCCYY: Month, day, century and year If the Hospice Start Date is populate with zeros, then this date is populated with zeros. This field is populated with zeros if the hospice period is open (not ended).
**********	DISABILITY INSURANCE (3 OCCURRENCES) First occurrence is the active/most recent Disability Insurance.
BENE DIB ENTLMT STRT DT	The date that a beneficiary covered by the SSA disability program becomes entitled to Medicare benefits. MMDDCCYY: Month, day, century and year This field is populated with zeros if no disability coverage

	period is found.
BENE DIB ENTLMT END DT	The date that Medicare benefits due to disability end for a beneficiary who was covered by the SSA disability program. MMDDCCYY: Month, day, century and year This field is populated with zeros if the Disability Entitlement Start Date is zeros. This field is zeros if the Disability Entitlement Period is open (not ended).
BENE DIB ENTLMT DT JSTFCTN CD	The justification for a beneficiary's Part A and/or Part B Medicare entitlement dates based upon his/her disability insurance benefits (DIB) status. 1 = BENEFICIARY IS ENTITLED TO MEDICARE COVERAGE DUE TO PRIOR PERIODS OF SSA DISABILITY ENTITLEMENT A = BENEFICIARY IS ENTITLED TO MEDICARE BASED UPON SSA DISABILITY AND THE 24 MONTH WAITING PERIOD HAS BEEN WAIVED BLANK = N/A This field is populated with SPACE if no Disability Entitlement Period is found.
**********	GROUP HEALTH ORGANIZATION (10 OCCURRENCES) The first occurrence is the active or most recent Medicare Group Health Organization coverage (that is plan enrollment). Presently, this section is populated with Medicare Part C and Medicare Part D plan enrollments.
BENE GHO ENRLMT STRT DT	The date that the beneficiary enrolled in the Service Elections. MMDDCCYY: Month, day, century and year This field is populated with zeros if no service election (plan enrollment) has been found.
BENE GHO ENRLMT END DT	The date that the beneficiary disenrolled in the Service Elections. MMDDCCYY: Month, day, century and year This field is populated with zeros if the GHO Enrollment Start Date is populated with zeros. This field is populated with zeros if the Service Election (plan enrollment) is open (not ended).
BENE GHO	Unique identification for an agreement between CMS

CNTRCT NUM	and a Managed Care Organization (MCO) enabling the MCO to provide Medicare + choice coverage to eligible beneficiaries. This field is populated with spaces only if neither Medicare Part C nor Medicare Part D enrollment has been found. Generally the following applies, but there could be some exceptions especially with 9. A contract number beginning with the letter H indicates local MA (Medicare Advantage) plans, MA-PD (Medicare Advantage with Prescription Drug) plans, PACE organizations, cost plans, and some demonstrations. A contract number beginning with the letter R indicates regional MA and MA-PD plans. A contract number beginning with the number 9 indicates a Medicare Demonstration plan. A contract number beginning with the letter S indicates Stand-Alone PDP (Prescription Drug Plan). Starting with contract year 2007, a contract number starting with E indicates an employer sponsored prescription drug plan.
**********	MBD PLAN BENEFIT PACKAGE ELECTION (10 OCCURRENCES) The first occurrence is the active or most recent Medicare Plan Benefit Package coverage. Presently, this section is populated with Medicare Part C and Medicare Part D plan benefit package selections.
MBD GHP ENRLMT EFCTV DT	The date that the beneficiary enrolled in the Service Elections. MMDDCCYY: Month, day, century and year This field is populated with zeros if no service election (plan enrollment) has been found.
MBD PBP STRT DT	Date the PBP election started. MMDDCCYY: Month, day, century and year This field is populated with zeros if no plan benefit package selection has been found.
MBD PBP END DT	Date the PBP election ended. MMDDCCYY: Month, day, century and year This field is populated with zeros if the PBP Start Date is populated with zeros. This field is populated with zeros if the PBP election is open (not ended).
MBD PBP NUM	A unique identifier for the managed care benefit

	package. This field is populated with spaces if no PBP election has been found for the beneficiary.
MBD PBP CVRG TYPE CD	Identifies the type of managed care enrollment or FFS period. 3 =CCP COORDINATED CARE PLAN 6 = PACE PROGRAM OF ALL INCLUSIVE CARE FOR THE ELDERLY (PACE) 8 =DEMO DEMONSTRATION 5 = PFFS PRIVATE FEE FOR SERVICE 10 = Cost/HCPPCOST/HEALTH CARE PREPAYMENT PLAN 9 = FFS (FEE FOR SERVICE) 11 = PDP Election This field is populated with spaces if no PBP election has been found for the beneficiary.
**********	END STAGE RENAL DISEASE COVERAGE (1 OCCURRENCE)
BENE ESRD CVRG STRT DT	The date on which the beneficiary is entitled to Medicare in some part because of a diagnosis of End Stage Renal Disease. MMDDCCYY: Month, day, century and year This field is populated with zeros if no ESRD coverage is found for the beneficiary.
BENE ESRD CVRG END DT	The date on which the beneficiary is no longer entitled to Medicare under ESRD Provisions. MMDDCCYY: Month, day, century and year This field is populated with zeros if the ESRD Coverage Start Date is populated with zeros. This field is populated with zeros if the ESRD Coverage period is open (not ended).
BENE ESRD TRMNTN RSN CD	The reason Medicare-Based ESRD coverage was terminated. DATA VALIDATION: A = Month of transplant plus 36 months; B = Last month of chronic dialysis; C = Part A termination;

	D = Death; E = ESRD ended This field is populated with spaces if either no ESRD Coverage has been found for the beneficiary or the ESRD Coverage Period has not been ended (s open/active).
**********	END STAGE RENAL DISEASE DIALYSIS (1 OCCURRENCE)
BENE ESRD DLYS STRT DT	A date that indicates when the ESRD Dialysis started. MMDDCCYY: Month, day, century and year This field is populated with zeros if no ESRD Dialysis is found for the beneficiary.
BENE ESRD DLYS END DT	A date that indicates when ESRD Dialysis ended. MMDDCCYY: Month, day, century and year The field is populated with zeros if the Dialysis Start Date is populated with zeros. This field is populated with zeros if the beneficiary is presently receiving Dialysis care through Medicare.
**********	END STAGE RENAL DISEASE TRANSPLANT (1 OCCURRENCE)
BENE ESRD TRNSPLNT STRT DT	A date that indicates when a Kidney Transplant Operation Occurred. MMDDCCYY: Month, day, century and year This field is populated with zeros if no ESRD Kidney Transplant is found for the beneficiary.
BENE ESRD TRNSPLNT END DT	A date that indicates when a Kidney Transplant failed. MMDDCCYY: Month, day, century and year The field is populated with zeros if the Transplant Start Date is populated with zeros. This field is populated with zeros if the beneficiary is presently benefiting from Kidney Transplant (that is the Transplant Start Date is populated with a date value).
**********	THIRD PARTY PART A HISTORY (5 OCCURRENCES) First occurrence is the active/most recent Third Party

	Part A period.
BENE PTA TP STRT DT	The start date of a private third party group's or state's liability for a beneficiary's Part A premium. MMDDCCYY: Month, day, century and year
BENE PTA TP PRM PYR CD	Part A – The identifier for a third party agency (either a private group's, state buy-in agency) responsible for paying a beneficiary's Medicare Part A premium. Part A: S01- S99 State billing T01-Z98 Private Third Party Billing Z99
BENE PTA TP END DT	The termination date of a private third party group's or state's liability for a beneficiary's Part A premium. MMDDCCYY: Month, day, century and year
BENE PTA TP BUYIN ELGBLTY CD	A code that indicates the reason for Part A state buy-in eligibility. A = AGED MEMBER OF SSI PAYMENTS (CMS TO STATE) B = BLIND MEMBER OF SSI PAYMENTS (CMS TO STATE) C = ENTITLED TO PART A OF TITLE IV (AFDC) (STATE TO CMS) D = DISABLE MEMBER OF SSI PAYMENTS (CMS TO STATE) E = AGED MEMBER OF SUPPLEMENTAL PAYMENT ADMINISTERED BY SSA (CMS TO STATE) F = BLIND MEMBER OF SUPPLEMENTAL PAYMENT ADMINISTERED BY SSA (CMS TO STATE) G = DISABLED MEMBER OF SUPPLEMENTAL PAYMENT ADMINISTERED BY SSA (CMS TO STATE) H = AGED, BLIND, OR DISABLED MEMBER OF A ONE-TIME PAYMENT (OTP) (CMS TO STATE) M = ENTITLED TO MEDICAL ASSISTANCE ONLY (MAO), NON-CASH MEMBER (STATE TO CMS) Z = DEEMED CATEGORICALLY NEEDY (STATE TO

	CMS)
**********	THIRD PARTY PART B HISTORY (5 OCCURRENCES) First occurrence is the active/most recent Third Party Part B period.
BENE PTB TP STRT DT	The start date of a private third party group's or state's liability for a Part B premium. MMDDCCYY: Month, day, century and year
BENE PTB TP PRM PYR CD	Part B - The identifier for a third party agency (either a private group, state buy-in agency or the Office of Personnel Management (OPM) responsible for paying a beneficiary's Medicare Part B premium. Part B: Blank — No Bill Determined 000 001 005 006 007 008 010- 650 — State billing 700 A01-R99 — Group Payers for Part B premiums.
BENE PTB TP TRMNTN DT	The termination date of a private third party group's or state's liability for a beneficiary's Part B premium. MMDDCCYY: Month, day, century and year
BENE PTB TP BUYIN ELGBLTY CD	A code that indicates the reason for Part B state buy-in eligibility. A = AGED MEMBER OF SSI PAYMENTS (CMS TO STATE) B = BLIND MEMBER OF SSI PAYMENTS (CMS TO STATE)

	C = ENTITLED TO PART A OF TITLE IV (AFDC) (STATE TO CMS) D = DISABLE MEMBER OF SSI PAYMENTS (CMS TO STATE) E = AGED MEMBER OF SUPPLEMENTAL PAYMENT ADMINISTERED BY SSA (CMS TO STATE) F = BLIND MEMBER OF SUPPLEMENTAL PAYMENT ADMINISTERED BY SSA (CMS TO STATE) G = DISABLED MEMBER OF SUPPLEMENTAL PAYMENT ADMINISTERED BY SSA (CMS TO STATE) H = AGED, BLIND, OR DISABLED MEMBER OF A ONE-TIME PAYMENT (OTP) (CMS TO STATE) M = ENTITLED TO MEDICAL ASSISTANCE ONLY (MAO), NON-CASH MEMBER (STATE TO CMS) P = Qualified Medicare Beneficiary (QMB) Z = DEEMED CATEGORICALLY NEEDY (STATE TO CMS)
**********	PART D DATA ELEMENTS
BENE FIRST ELIGIBLE PART D DATE	The first date on which a beneficiary had become eligible for Medicare Part D, whether or not enrolled on a Medicare Part D plan.
BENE AFF (AFFIRMATIVELY) DEC (DECLINE) INDICATOR also known as, Bene Part D Opt-Out Indicator	An indicator providing whether or not a beneficiary had chosen not to be auto-enrolled by CMS in a Medicare Part D plan. Values: Y = YES Space (default value) or N = NO
**********	BENE COPAY HISTORY (10 TIMES)
BENE COPAY TYPE	A code indicating whether the beneficiary was determined eligible for Low-Income Subsidy or Deemed eligible. Values: L = Low-Income Subsidy (LIS) D = Deemed
BENE COPAY	An indicator providing the level of copay granted to the

LEVEL	beneficiary. Values: If BENE LIS TYPE = L 1 = HIGH 4 = 15% If BENE LIS TYPE = D 1 = HIGH 2 = LOW 3 = 0 (ZERO)
BENE COPAY START DATE	The effective date of the copay period. Format: MMDDCCYY
BENE COPAY END DATE	The end date of the copay period. Format: MMDDCCYY
**********	PART D PLAN BENEFIT PACKAGE (10 TIMES) The first occurrence is the active or most recent Medicare Part D Plan coverage. Presently, this section is populated with Medicare Part C offering drug coverage and Medicare Part D plan benefit package selections. For Medicare Part C plans that offer Part D (for example (Medicare Advantage MA-PD) the beginning date of enrollment in the Part C plan may be earlier than January 1, 2006 (the start of the Medicare Part D program).
BENE CONTRACT NUM (NUMBER)	
BENE PTD PBP ENRLMNT STRT DT	The effective date that the beneficiary was enrolled in the Service Elections (PBP). Format: MMDDCCYY For Medicare Part C plans that offer Part D (for example (Medicare Advantage MA-PD) the beginning date of enrollment in the Part C plan may be earlier than January 1, 2006 (the start of the Medicare Part D program)
BENE PTD PBP	The end date of the beneficiary's enrollment in the

ENRLMNT END DT	Service Elections (PBP). Format: MMDDCCYY
BENE PTD PBP PLAN ID	A unique identifier for the managed care benefit package. For Medicare Part D, this number is a unique identification for an agreement between CMS and a Medicare Part D provider, enabling the Medicare Part D provider to provide prescription drug coverage to eligible beneficiaries.
BENE ENROLL TYPE IND (INDICATOR)	An indicator providing the type of enrollment performed. Values: A = Auto-Enrolled B = Beneficiary Election C = Facilitated Enrollment D = System-Generated Enrollment (Rollover)
FILLER	
SECONDARY MATCH IND	This field indicates if a matched detail record was matched under the Secondary Match algorithm. ** A matched detail record is indicated by the presence of alphanumeric values in the fields: BENE CLM ACNT NUM, BENE IDENT CD and a Record Return Code of ‘000000’ or ‘000001’. Valid Values: SPACE : Default ‘S’: Match accomplished by Secondary Match Algorithm
SPD CALCULATION IND	This field indicates the disposition of the detail record with respect to the State Phase-Down Calculations (Refer also to the MSM records). Valid Values: ‘N’: Detail record Not Used in State Phase-Down calculations ‘D’: Detail record used as a ‘Disenrollment’ (Credit) in State Phase-Down calculations ‘E’: Detail record used as an ‘Enrollment’ (Charge) in State Phase-Down calculations ‘C’: Detail record represents information that was used in a previous month as an ‘Enrollment’ (Charge) in State

	Phase-Down calculations Note: the 'C' value is important in order to 'Disenroll' when an 'Enrollment' had occurred more than one month ago.
**********	REMAINDER OF RECORD
FILLER	

3.10.11.11 File Summary Record Data Element Specifications

REC IDENT CODE	"FSM"	
STATE CODE	State Code - Valid Code	
	Alabama	
	Alaska	
	Arizona	
	Arkansas	
	California	
	Colorado	
	Connecticut	
	Delaware	
	District of	
	Columbia	
	Florida	
	Georgia	
	Hawaii	
	Idaho	
	Illinois	
	Indiana	
	Iowa	
	Kansas	
	Kentucky	
	Louisiana	
	Maine	
	Maryland	
	Massachusetts	MA
	Michigan	
	Minnesota	
	Mississippi	
FILE PROCESS	Format: YYYY.MM.DD.hh.mm.ss.nnnn	

TIMESTAMP	YYYY = Year; MM = Month; DD = Day; hh = hour; mm = minute; ss = second; nnnnnn = microsecond The exact time that the state file had been processed.
FILE CREATE MONTH	Month Code for Current Month – Valid Values (01 – 12)Calendar Month equals Month the file is created (for example January=01, December=12) The month in which the MMA state file was created.
FILE CREATE YEAR	Year Code for Current Year – that is 2006 Current Year equals Calendar Year the file is created The year in which the MMA state file was created.
RECORDS TOTAL	The total number of detail records in the state file. RECORDS VALID + RECORDS INVALID = RECORDS TOTAL. RECORDS MATCHED + RECORDS NOT MATCHED = RECORDS TOTAL. This total does not include PRO detail records.
RECORDS DUPLICATE	The total number of duplicate detail records found in the state file. This count does not include PRO detail records.
RECORDS NONDUP	The total number of non-duplicate valid detail records found in the state file. This count does not include PRO detail records.
RECORDS VALID	The total number of valid detail records found in the file. Valid records are non-duplicate and provide valid essential information. Additionally, a detail record is considered Invalid if it does not have one of the following combinations of identifying information: - HICN or RRB, Social Security Number, Date of Birth - HICN or RRB, Date of Birth - Social Security Number, Date of Birth This count does not include PRO detail records. See also Person-Level Record Data Element Specifications: Error Return Codes.
RECORDS	The total number of invalid detail records found in the

INVALID	file. See also Person-Level Record Data Element Specifications: Error Return Codes. This count does not include PRO detail records.
RECORDS MATCHED	The total number of detail records that could be matched successfully to an individual on the Medicare Beneficiary Database. This count does not include PRO detail records.
RECORDS NOT MATCHED	The total number of detail records that could not be matched successfully to an individual on the Medicare Beneficiary Database. This count includes Invalid detail records because no match is attempted on an invalid detail record. This count does not include PRO detail records.
FILLER	
VALID DUAL RECORDS	The total number of valid Dual Eligible detail records found in the file. Valid records are non-duplicate and provide valid essential information. See also Person-Level Record Data Element Specifications: Error Return Codes. This count does not include PRO detail records.
VALID DUAL MATCHES	The total number of valid Dual Eligible detail records that could be matched successfully to an individual on the Medicare Beneficiary Database. This count does not include PRO detail records.
VALID DUAL NONMATCHES	The total number of valid Dual Eligible detail records that could not be matched successfully to an individual on the Medicare Beneficiary Database. This count does not include detail records that were not tried in the match process that is invalid records. This count does not include PRO detail records.
VALID LIS RECORDS	The total number of valid Low-Income Subsidy detail records found in the file. Valid records are non-duplicate and provide valid essential information. See also Person-Level Record Data Element Specifications: Error Return Codes. This count does not include PRO detail records.
VALID CURRENT DUALS	The total number of valid Dual Eligible detail records with Eligibility Month/Year = File Create Month/Year. Valid records are non-duplicate and provide valid essential information. See also Person-Level Record Data

	Element Specifications: Error Return Codes. This count does not include PRO detail records.
VALID RETRO DUALS	The total number of valid Dual Eligible detail records with Eligibility Month/Year < File Create Month/Year. Valid records are non-duplicate and provide valid essential information. See also Person-Level Record Data Element Specifications: Error Return Codes. This count does not include PRO detail records.
TOTAL ELIG MONTHS	The total number of Eligibility months found in the file. This count does not include PRO detail records.
TOTAL VALID PRO RECORDS	The total number of valid Prospective Full Dual (PRO) detail records found in the file. Valid records are non-duplicate and provide valid essential information. See also Person-Level Record Data Element Specifications: Error Return Codes.
TOTAL INVALID PRO RECORDS	The total number of invalid Prospective Full Dual (PRO) detail records found in the file See also Person-Level Record Data Element Specifications: Error Return Codes (ERC)
TOTAL MATCHED PRO RECORDS	The total number of valid Prospective Full Dual (PRO) detail records that could be matched successfully to an individual on the Medicare Beneficiary Database.
FILLER	

3.10.11.12 Month Summary Record Data Element Specifications

**********	One of these records is generated for each eligibility month found in the file.
REC IDENT CODE	"MSM"
STATE CODE	State Code - Valid Code Alabama AL Alaska Arizona AZ Arkansas AR California CA Colorado CO Connecticut CT

	Delaware DE District of Columbia DC Florida Georgia GA Hawaii Idaho Illinois Indiana IN Iowa Kansas KS Kentucky KY Louisiana LA Maine Maryland MD Massachusetts MA Washington Michigan MI Minnesota MN Mississippi MS
FILE PROCESS TIMESTAMP	Format: The exact time that the state file had been processed.
FILE CREATE MONTH	Month Code for Current Month – Valid Values (01 – 12)Calendar Month equals Month the file is created (for example January=01, December=12) Create Month of the MMA State File
FILE CREATE YEAR	Year Code for Current Year – that is 2006 Current Year equals Calendar Year the file is created Create Year of the MMA State File
ELIGIBILITY MONTH	Calendar Month Code for applicable Medicaid eligibility (for example012006) found in the MMA state file. Valid Month Values: 01 – 12 (for example January=01,

	December=12.)
ELIGIBILITY YEAR	Calendar Year Code for applicable Medicaid eligibility (for example012006) found in the MMA state file. Valid Month Values: 01 – 12 (for example January=01, December=12.)
CALCULATION SWITCH	Y = This Eligibility Month/Year was used in the state phase-down calculation. N = This Eligibility Month/Year was not used in the state phase-down calculation. Please note: Months previous to 012006 are not used in State Phase-Down Calculation.
TOTAL VALID RECORDS	The total number of valid Dual Eligible detail records found in the MMA state file for this Eligibility Month/Year. TOTAL VALID FULL DUAL RECORDS + TOTAL VALID NON-FULL DUAL RECORDS = TOTAL VALID RECORDS This count does not include PRO detail records.
TOTAL VALID FULL DUAL RECORDS	The total number of valid full dual beneficiary records. This count does not include PRO detail records.
TOTAL VALID NON-FULL DUAL RECORDS	The total number of valid non-full dual beneficiary records. This count does not include PRO detail records.
NET TOTAL VALID FULL DUAL ENROLLMENTS	The net total number of valid Full Dual Eligible enrollments counted for this Eligibility Month/Year. This count does not include PRO detail records.
NET TOTAL VALID FULL DUAL DISENROLLMENTS	The net total number of valid Full Dual Eligible disenrollments counted for this Eligibility Month/Year. This count does not include PRO detail records.
FILLER	

3.10.11.13 Trailer Record Data Element Specifications

RECORD IDENT CODE	"TRL"
FILE PROCESS TIMESTAMP	Format: YYYY.MM.DD.hh.mm.ss.nnnn YYYY = Year; MM = Month; DD = Day;

	hh = hour; mm = minute; ss = second; nnnnnn = microsecond The exact time that the state file had been processed.
FILE CREATE MONTH	Month Code for Current Month – Valid Values (01 – 12)Calendar Month equals Month the file is created (for example January=01, December=12) The month in which the MMA state file was created.
FILE CREATE YEAR	Year Code for Current Year – that is 2006 Current Year equals Calendar Year the file is created The year in which the MMA state file was created.
FILE ACCEPT IND	Y = The state file had been accepted; N = the state file had not been accepted.
FILLER	
**********	ORIGINAL STATE TRAILER RECORD (180 BYTES)
RECORD IDENT CODE	Identifies Record as Trailer always = “TRL”
BENE RECORD COUNT	Total number of records on the file
STATE CODE	State Code - Valid Code Alabama AL Alaska Arizona AZ Arkansas AR California CA Colorado CO Connecticut CT Delaware DE District of Columbia DC Florida Georgia GA

	Hawaii Idaho Illinois Indiana IN Iowa Kansas KS Kentucky KY Louisiana LA Maine Maryland MD Massachusetts MA Washington Michigan MI Minnesota MN Mississippi MS
CREATE MONTH	Month Code for Current Month – Valid Values (01 – 12)Calendar Month equals Month the file is created (for example January=01, December=12
CREATE YEAR	Year Code for Current Year – that is 2006 Current Year equals Calendar Year the file is created
FILLER	
**********	REMAINDER OF RECORD
FILLER	

3.10.12 PCG Modified CMS Layouts

3.10.12.1 Buy-In File Transfers Between HMS and interChange

HMS provides the Buy-In functionality for the Commonwealth of Kentucky and is the Buy-In system of record. It is necessary for the interChange software to take the transactions as performed by HMS and load them into the iC database.

The greatest hurdle in this process is determining the member to apply the transaction to. To minimize the issue of two different computer systems linking to two different members, HMS is solely responsible for determining the member to link to. HMS processes the CMS record, the add two additional fields: an action code and the iC-generated Medicaid ID of the member HMS linked to.

3.10.12.2 CMS Billing Records (Part A and B)

Field	Position	Length	Description
Original transaction	1	160	This is the original transaction as sent by CMS
Action code	161	1	This is the action taken by HMS. Valid values are: A – applied successfully M – mismatched – HMS unable to determine member
Medicaid ID	162	10	This is the iC-created Medicaid ID HMS has matched to. It is used by the iC loader to apply HMS changes to the iC database.

The same situation faces the files transmitted back to CMS. The same solution is used where HMS attaches an action code and the Medicaid ID.

3.10.12.3 CMS Response/Input Records (Part A and B)

Field	Position	Length	Description
Original transaction	1	120	This is the original transaction as sent to CMS
Action code	121	1	This is the action taken by HMS. Valid values are: A – applied successfully M – mismatched – HMS unable to determine member (should not be seen in this file)
Medicaid ID	122	10	This is the iC-created Medicaid ID HMS has matched to. It is used by the iC loader to apply HMS changes to the iC database.

3.10.13 Record Layout – EDB Finder File

Field Name	Loc	Length	Type	Notes
SSN-NUM	1	9	CHAR	Social security number
REQ-ID	10	8	CHAR	Normally the state abbreviation
BENE-ID-NUM	18	25	CHAR	Medicaid number

Field Name	Loc	Length	Type	Notes
BIRTH-DT	43	8	CHAR	Date of birth
SEX-CD	51	1	CHAR	Gender
GVN-NAME	52	6	CHAR	First name
SUR-NAME	58	6	CHAR	Last name
CREATE-YYMM	64	4	CHAR	Run year/month
MISC-DATA	68	13	CHAR	Sequential sequence number

3.11 Requirement Matrix and Cross Reference

This section provides a crosswalk of each functional requirement included in the KY MMIS Requirements Checklist shown in the RFP Appendix to MMIS design components. This is accomplished by listing each requirement with its current status, associated change orders and mapped system objects.

Requirement	Status	Mapped Objects	Change Orders
30.050.001.002.3B	RV Sign Off		
30.050.001A	RV Sign-Off CO	Member Buy-In Bill Txn Recipient Buy-In Eligibility Recipient Buy-In Premium Txn BIA-1001-M BIA-1002-M BIA-1004-M BIA-1010-M BIA-1011-M BIA-1012-M BIA-1013-M BIB-2001-M BIB-2002-M BIB-2004-M BIB-2010-M BIB-2011-M BIB-2013-M	183 - Report - 'Recipient' to 'Member'
30.090.001.001.2	RV Sign-Off CO	PBUMSTAC BUYJM401 BUYJM402 BUYJM403 BUYJM404 BUYJM405 BUYJM406 BUYJM407 BUYJM408 BUYJM409 BUYJM410 BUYJM411 Medicare A Buy-In Bill Medicare A Buy-In Premium Medicare B Buy-In Bill Medicare B Buy-In Premium Medicare Buy-In A Medicare Buy-In B buypm401 buypm402 buypm403 buypm404 buypm405	458 - Use Standard Report Headings 459 - Modify BIA-1001-M Report 463 - Modify BIA-1011-M Report 464 - Modify BIA-1013-M Report 476 - Billing Process Error Report 478 - Original ID Change Report 482 - Manual Transactions Submitted 483 - Matching Transactions Report 484 - Recipients Not Billed Report 485 - Unmatched Recipients Billed 486 - Misc Debit/Credit Transactions 1078 - Buy-In A Combined

Requirement	Status	Mapped Objects	Change Orders
		buypm406 buypm407 buypm408 buypm409 buypm410 buypm411 BIA-1001-M BIA-1002-M BIA-1004-M BIA-1010-M BIA-1011-M BIA-1012-M BIA-1013-M BIB-2001-M BIB-2002-M BIB-2004-M BIB-2010-M BIB-2011-M BIB-2013-M BUY-3001-M BUY-4001-M BUY-4002-M BUY-4003-M BUY-4004-M BUY-4005-M BUY-4006-M BUY-4007-M BUY-4008-M BUY-4009-M BUY-4010-M BUY-4011-M Buy-In Report Header	Panel 1420 - CMS State Action System 2259 - Modify reports 460 - Modify BIA-1002-M Report 461 - Modify BIA-1004-M Report 462 - Disable BIA-1009-M BIB-2009-M 465 - Modify BIB-2001-M Report 466 - Modify BIB-2002-M Report 467 - Modify BIB-2004-M Report 468 - Modify BIB-2011-M Report 469 - Modify BIB-2013-M Report 479 - Buy-In Death Report 480 - Retroactive Buyin Accrete Report 481 - Transaction to CMS Summary Rpt 1079 - Buy-In B Combined Panel 1419 - CMS Batch Receiving System 1421 - CMS Batch Sending System 2029 - Buy-In Extract for KMAA 2144 - Modify BIA-1010-M BIB-2010-M 2258 - Update data model
30.090.001.002.3	RV Sign-Off CO		488 - Create New CMS Datamodel 1420 - CMS State Action System 1419 - CMS Batch Receiving System 1421 - CMS Batch Sending System
30.090.001.002.N01	Informational	BUYJM431 BUYJM_MMAENROLL BUYJM_MMAMERGE	2468 - Part D - Standard Report Text 2470 - Part D - Convert

Requirement	Status	Mapped Objects	Change Orders
		BUYJM_MMARECON BUYJM_MMARETRO ELGJD111 ELGJM650 ELGJM651 ELGJM652 BuyInPartDLis buypm431 buypmMMAEnroll buypmMMAMerge buypmMMARecon buypmMMARetro elgpd05m elgpm650 elgpm651 elgpm652 elgpm660 elgpm670 BUY-4310-M BUY-4311-M	Batch System 2639 - Load Clawback Data 2641 - New report ELG-0655-M 2642 - Modify MMA Panel 3313 - New Panel - Part D LIS 3314 - Merge Part D LIS 2469 - Part D - Convert Core Panels 2638 - New Table T_RE_CLAWBACK 3312 - New Table T_BUY_PARTD_LIS
30.090.001.002.N02	RV Sign-Off CO	BUYJD601 BUYJM600 BUYJM602 BUYJMALT buypd601 buypm600 buypm602 buypm603 buypmalt	1183 - PCG Buy-In Recon Interface 489 - Buy-In Alternate Demographics 1080 - PCG Buy-In Update 1184 - PCG Eligibility Feed Interface
30.090.001.002.N03	RV Sign-Off CO		489 - Buy-In Alternate Demographics
30.090.001.004.2	Informational	Medicare A Buy-In Bill Medicare A Buy-In Coverage Medicare A Buy-In Premium Medicare A Coverage Medicare B Buy-In Bill Medicare B Buy-In Coverage Medicare B Buy-In Premium	2849 - Move Core Batch Changes to MO 3064 - Repla Tbl: T_RE_AID_ELIG_STATE 3472 - Modify Buy-In Menu
30.090.001.004.6	RV Sign-Off CO	PBUMSTAC BUYJM508 BUYJM522 BUYJM523 ELGJM150 ELGJM153 BuyInEDBAddresses BuyInEDBEndStageRenalDi	226 - Process EDB Enrollment Database 506 - EDB-HIC Cross-Reference Report 1156 - EDB Missing Sequence Report 1464 - EDB Processing Reports

Requirement	Status	Mapped Objects	Change Orders
		sease BuyInEDBGroupHealth BuyInEDBHIC BuyInEDBHospice BuyInEDBInformation BuyInEDBPartA BuyInEDBPartB BuyInEDBSearch buypm508 buypm523 elgpm150 elgpm152 elgpm153 BUY-5003-M BUY-5004-M BUY-5005-M BUY-5006-M BUY-5007-M BUY-5008-M BUY-5009-M ELG-0152-M	3387 - Modify EDB Finder File 427 - New Table - T_RE_EDB 428 - Create EDB Panels 1077 - EDB Finder File Extract
30.110.001.003C			
30.110.001.005	RV Sign Off		
3005000400215		manual_mass_adj.sh T_TPL_AC_PARENT T_TPL_AR_CAS_RSNS clm0054d clm_manual_mass_adj clmsBenefitPlanGroup elgpltce tpl0010m	1825 - File Transfer Service Reference 2436 - KYAMEND- Member Data to MaxMc

3.12 Change Orders

Note: Change Orders with a status of “Cancelled” at the time this document was prepared are not included in this document.

3.12.1 Report - 'Recipient' to 'Member' - 183

Identifier	Type	Level	Subsystem	Computed	Estimated	Priority
183	Change Order		Buy-In Data Maintenance			3

3.12.1.1 Desired Solution

There is a need to verify the text "Recipient" to "Member" has been changed "RID" to "MID" on all Buy-In reports.

3.12.1.2 Business Impact

None.

3.12.1.3 Technical Specifications

Verify the text "Recipient" has been replaced with "Member" on all Buy-In and EDB reports.

3.12.1.4 Clarifications

No associated clarifications found.

3.12.1.5 Associated Requirements

Requirement ID	Type
30.050.001A	RFP Split Requirement

3.12.1.6 Associated System Objects

Technical Name	Object Type	Title
No associated Change Orders found.		

3.12.1.7 Change Order Status

Status	Date
Issue Identified	06/30/2005
Change Order Written	09/19/2005
Ready for Model Office	03/30/2006
Model Office Implemented	04/14/2006
UAT Implemented	11/01/2006
Prod Implemented	06/14/2007

3.12.2 Panel - 'Recipient' to 'Member' - 184

Identifier	Type	Level	Subsystem	Computed	Estimated	Priority
184	Change Order		Buy-In Data Maintenance			3

3.12.2.1 Desired Solution
There is a need to verify the text 'Recipient' has been changed to 'Member' on all Buy-In panels.

3.12.2.2 Business Impact
None.

3.12.2.3 Technical Specifications
Verify the text "Recipient" has been replaced with the text "Member" on all Buy-In panels.

3.12.2.4 Clarifications
I have verified the panels affected by this CO, and the text 'Recipient' is not present on these panels.

Per Doug Abrams, CO 655 is to replace this CO which is to be cancelled.

In conversation with Anita, the wrong CO was updated. This CO is not cancelled.

3.12.2.5 Associated Requirements

Requirement ID	Type
30.050.001A	RFP Split Requirement
30.090.001.001.2	RFP Requirement

3.12.2.6 Associated System Objects

Technical Name	Object Type	Title
Recipient Buy-In Eligibility	Panel	Buy-In Eligibility
Recip.BuyBMismatch	Panel	Medicare B Buy-In Mismatch
Recip.BuyBExcept	Panel	Medicare B Buy-In Exception
Recip.BuyAExcept	Panel	Medicare A Buy-In Exception
Member Buy-In Bill Txn	Panel	Buy-In Bill Txn
Recipient Buy-In Premium Txn	Panel	Buy-In Premium Txn
Recip.BuyAMismatch	Panel	Medicare A Buy-In Mismatch

3.12.2.7 Change Order Status

Status	Date
Issue Identified	06/30/2005
Change Order Written	09/19/2005

Status	Date
Ready for Model Office	02/10/2006
Cancelled	04/26/2006
Ready for Model Office	04/27/2006
Model Office Implemented	06/02/2006
UAT Implemented	11/01/2006
Prod Implemented	06/14/2007

3.12.3 Process EDB Enrollment Database - 226

Identifier	Type	Level	Subsystem	Computed	Estimated	Priority
226	Change Order		Buy-In Data Maintenance			1

3.12.3.1 Desired Solution
There is a need to process the EDB Buyin enrollment database file transmitted from CMS.

3.12.3.2 Business Impact
None.

3.12.3.3 Technical Specifications
A new program buypm520 was written to process the EDB file received from CMS using the following criteria:

- The EDB record has been inserted in the T_RE_EDB table.
- The member is located on the T_RE_BASE table.
- Processing follows the same rules as BENDEX processing.
- The T_RE_MEDICARE_A, T_RE_MEDICARE_B and T_RE_HIB tables are updated appropriately.
- Transactions are logged appropriately in the T_RE_PS2_LOG and T_RE_PS2_ERR tables using "EDB" as the CDE_SOURCE.
- Rows older than 90 days are purged from T_RE_EDB.

3.12.3.4 Clarifications
A meeting was held 1/18/07 with EDS, HMS and Commonwealth personnel to discuss the routing of the EDB file to HMS, then interChange.

Participants were:

EDS - Howard Warren, Steve Russell and Bill Ponder

HMS - Chris Sallee and Josh Bradley

CW - Cliff Robey, Sandeep Kapoor

The Medicare Entitlement File from HMS was discussed.

1. Howard asked Josh to create a HMS-specific prefix in the MISC_DATA field to differentiate HMS-generated records from CMS generated records.

2. Josh is working towards providing the test file early next week.

3. The pathway for the EDB Response File is:

--------CMS to KY mainframe to HMS to ODC to iC

This new process is dependent upon Commonwealth approval. Cliff Robey is seeking approval.

The new proposed EDB processing identified in the Clarification above has not been implemented. See attached email under Supplemental documentation. Did not receive approval from Commonwealth.

3.12.3.5 Associated Requirements

Requirement ID	Type
30.090.001.004.6	Interfaces - Incoming

3.12.3.6 Associated System Objects

Technical Name	Object Type	Title
ELGJM150	Batch Job	Process EDB file
elgpm150	Program	Process EDB file

3.12.3.7 Change Order Status

Status	Date
Issue Identified	07/08/2005
Change Order Written	10/07/2005
Sign-Off Requested	10/11/2005
Change Order Written	10/19/2005
Construction in Progress	03/14/2006
Ready for Model Office	04/10/2006
Model Office Implemented	04/14/2006
UAT Implemented	11/01/2006
Prod Implemented	06/14/2007

3.12.4 New Table - T_RE_EDB - 427

Identifier	Type	Level	Subsystem	Computed	Estimated	Priority
427	Change Order		Buy-In Data Maintenance			1

3.12.4.1 Desired Solution
There is a need to maintain an online version of the EDB file as sent by CMS.

3.12.4.2 Business Impact
None.

3.12.4.3 Technical Specifications
See supplemental documentation for table definition.

3.12.4.4 Clarifications
No associated clarifications found.

3.12.4.5 Associated Requirements

Requirement ID	Type
30.090.001.004.6	Interfaces - Incoming

3.12.4.6 Associated System Objects

Technical Name	Object Type	Title
No associated Change Orders found.		

3.12.4.7 Change Order Status

Status	Date
Change Order Written	08/10/2005
Sign-Off Requested	10/11/2005
Change Order Written	10/19/2005
Ready for Model Office	01/10/2006
Model Office Implemented	03/17/2006
UAT Implemented	11/01/2006
Prod Implemented	06/14/2007

3.12.5 Create EDB Panels - 428

Identifier	Type	Level	Subsystem	Computed	Estimated	Priority
428	Change Order		Buy-In Data Maintenance			1

3.12.5.1 Desired Solution
There is a need for panels to view the T_BUY_EDB table in a read-only fashion.

3.12.5.2 Business Impact
None.

3.12.5.3 Technical Specifications
Add new panels to allow users to view data transmitted by CMS in the EDB file.

The primary panel is a search panel to allow searching the T_BUY_EDB table by combination of MAID, SSN and/or HIC. This is the only panel that allows input.

All rows returned by the search are returned in the panel. The user is able to click on the desired row and drill down to view data from the row.

3.12.5.4 Clarifications
No associated clarifications found.

3.12.5.5 Associated Requirements

Requirement ID	Type
30.090.001.004.6	Interfaces - Incoming

3.12.5.6 Associated System Objects

Technical Name	Object Type	Title
BuyInEDBHIC	Panel	HIC
BuyInEDBPartA	Panel	Buy-In Part A
BuyInEDBGroupHealth	Panel	Group Health
BuyInEDBSSN	Panel	Buy-In EDB SSN
BuyInEDBInformation	Panel	EDB Entitlement Information
BuyInEDBHospice	Panel	Hospice
BuyInEDBSearch	Panel	Buy-In EDB Search
BuyInEDBPartB	Panel	Buy-In Part B
BuyInEDBAddresses	Panel	Buy-In EDB Addresses
BuyInEDBEndStageRenalDisease	Panel	Buy-In End Stage Renal Disease

3.12.5.7 Change Order Status

Status	Date

Status	Date
Issue Identified	08/10/2005
Change Order Written	09/19/2005
Construction in Progress	01/10/2006
Ready for Construction Walkthrough	01/23/2006
Ready for Model Office	02/10/2006
Model Office Implemented	06/09/2006
UAT Implemented	11/01/2006
Prod Implemented	06/14/2007

3.12.6 Use Standard Report Headings - 458

Identifier	Type	Level	Subsystem	Computed	Estimated	Priority
458	Change Order		Buy-In Data Maintenance			3

3.12.6.1 Desired Solution
There is a need to modify the standard Buy-In reports to use the Kentucky headings.

3.12.6.2 Business Impact
None.

3.12.6.3 Technical Specifications
Verify all Buy-In and EDB reports use the standard headings.

3.12.6.4 Clarifications
No associated clarifications found.

3.12.6.5 Associated Requirements

Requirement ID	Type
30.090.001.001.2	RFP Requirement

3.12.6.6 Associated System Objects

Technical Name	Object Type	Title
BUY-3001-M	Report	Possible Medicare Eligibles
Buy-In Report Header	Report	Buy-In Report Standard Header
BIA-1010-M	Report	Buy-In Part A Expenditure Report
BIB-2010-M	Report	Buy-In Part B Expenditure Report
BIA-1012-M	Report	Buy-In Part A Conditional

3.12.6.7 Change Order Status

Status	Date
Issue Identified	08/12/2005
Change Order Written	09/19/2005
Ready for Model Office	03/30/2006
Model Office Implemented	04/14/2006
UAT Implemented	11/01/2006
Prod Implemented	06/14/2007

3.12.7 Modify BIA-1001-M Report - 459

Identifier	Type	Level	Subsystem	Computed	Estimated	Priority
459	Change Order		Buy-In Data Maintenance			2

3.12.7.1 Desired Solution
There is a need to modify the BIA-1001-M report.

3.12.7.2 Business Impact
None.

3.12.7.3 Technical Specifications
Modify the report as follows:

- Change the column heading "MEDICARE ID" to "HIC";
- Move the MEDICAID ID column to the far left; and,
- Sort by MEDICAID ID.

3.12.7.4 Clarifications
No associated clarifications found.

3.12.7.5 Associated Requirements

Requirement ID	Type
30.090.001.001.2	RFP Requirement

3.12.7.6 Associated System Objects

Technical Name	Object Type	Title
BIA-1001-M	Report	Buy-In Part A Billing (Receiving)

3.12.7.7 Change Order Status

Status	Date
Issue Identified	08/12/2005
Change Order Written	09/21/2005
Sign-Off Requested	10/11/2005
Change Order Written	10/11/2005
SE Assigned	02/08/2006
Ready for Model Office	02/08/2006
Model Office Implemented	03/24/2006
UAT Implemented	11/01/2006
Prod Implemented	06/14/2007

3.12.8 Modify BIA-1002-M Report - 460

Identifier	Type	Level	Subsystem	Computed	Estimated	Priority
460	Change Order		Buy-In Data Maintenance			2

3.12.8.1 Desired Solution
There is a need to add additional fields to report BIA-1002-M.

3.12.8.2 Business Impact
None.

3.12.8.3 Technical Specifications
Modify the report as follows:

- Change the column heading "MEDICARE ID" to "HIC";
- Move the MEDICAID ID column to the far left;
- Sort by MEDICAID ID; and,
- Add column "END DATE".

3.12.8.4 Clarifications
From Defect 6723, it was agreed to remove the ZIP while fixing the Defect. See attached email PDF and new report layouts. (Duncan)

3.12.8.5 Associated Requirements

Requirement ID	Type
30.090.001.001.2	RFP Requirement

3.12.8.6 Associated System Objects

Technical Name	Object Type	Title
BIA-1002-M	Report	Buy-In Part A Input Transactions Within interChange

3.12.8.7 Change Order Status

Status	Date
Issue Identified	08/12/2005
Change Order Written	09/21/2005
Sign-Off Requested	10/11/2005
Change Order Written	10/11/2005
SE Assigned	02/08/2006
Ready for Model Office	02/08/2006
Model Office Implemented	03/24/2006

Status	Date
UAT Implemented	11/01/2006
Prod Implemented	06/14/2007

3.12.9 Modify BIA-1004-M Report - 461

Identifier	Type	Level	Subsystem	Computed	Estimated	Priority
461	Change Order		Buy-In Data Maintenance			2

3.12.9.1 Desired Solution
There is a need to modify the BIA-1004-M report.

3.12.9.2 Business Impact
None.

3.12.9.3 Technical Specifications
Modify the report as follows:

- Sort by transaction code;
- Add transaction 49XX to selection;
- Add program code and status code columns; and,
- Add a break with summary counter when the transaction code changes.

3.12.9.4 Clarifications
No associated clarifications found.

3.12.9.5 Associated Requirements

Requirement ID	Type
30.090.001.001.2	RFP Requirement

3.12.9.6 Associated System Objects

Technical Name	Object Type	Title
BIA-1004-M	Report	Buy-In Part A Exception Error By Transaction Code

3.12.9.7 Change Order Status

Status	Date
Issue Identified	08/12/2005
Change Order Written	09/19/2005
Sign-Off Requested	10/11/2005
Change Order Written	10/11/2005
SE Assigned	02/08/2006
Ready for Model Office	02/08/2006
Model Office Implemented	03/24/2006
UAT Implemented	11/01/2006

Status	Date
Prod Implemented	06/14/2007

3.12.10 Disable BIA-1009-M BIB-2009-M - 462

Identifier	Type	Level	Subsystem	Computed	Estimated	Priority
462	Change Order		Buy-In Data Maintenance			2

3.12.10.1 Desired Solution
There is a need to disable producing reports BIA-1009-M and BIB-2009-M.

3.12.10.2 Business Impact
None.

3.12.10.3 Technical Specifications
Disable jobs BIAJM009 and BIBJM009 in Autosys.

3.12.10.4 Clarifications
No associated clarifications found.

3.12.10.5 Associated Requirements

Requirement ID	Type
30.090.001.001.2	RFP Requirement

3.12.10.6 Associated System Objects

Technical Name	Object Type	Title
PBUMSTAC	Batch Cycle	Monthly Buy-In State Actions Generation Batch System and Dependent Reports

3.12.10.7 Change Order Status

Status	Date
Issue Identified	08/12/2005
Change Order Written	09/19/2005
Ready for Model Office	03/07/2006
Model Office Implemented	04/13/2006
UAT Implemented	11/01/2006
Prod Implemented	06/14/2007

3.12.11 Modify BIA-1011-M Report - 463

Identifier	Type	Level	Subsystem	Computed	Estimated	Priority
463	Change Order		Buy-In Data Maintenance			2

3.12.11.1 Desired Solution
There is a need to modify the BIA-1011-M report.

3.12.11.2 Business Impact
None.

3.12.11.3 Technical Specifications
Modify program to:

- Change "BENEFICIARY" to "MEMBER";
- Add status code to detail line; and,
- Generate break by Population/Status Code.

3.12.11.4 Clarifications
No associated clarifications found.

3.12.11.5 Associated Requirements

Requirement ID	Type
30.090.001.001.2	RFP Requirement

3.12.11.6 Associated System Objects

Technical Name	Object Type	Title
BIA-1011-M	Report	Buy-In Part A State Totals by Member Population

3.12.11.7 Change Order Status

Status	Date
Issue Identified	08/12/2005
Change Order Written	09/19/2005
Sign-Off Requested	10/11/2005
Change Order Written	10/11/2005
SE Assigned	02/08/2006
Technical Design In Progress (obsolete)	02/08/2006
Ready for Tech Walkthrough	02/09/2006
Construction in Progress	02/10/2006

Status	Date
Ready for Construction Walkthrough	02/10/2006
Ready for Model Office	02/10/2006
Model Office Implemented	03/24/2006
UAT Implemented	11/01/2006
Prod Implemented	06/14/2007

3.12.12 Modify BIA-1013-M Report - 464

Identifier	Type	Level	Subsystem	Computed	Estimated	Priority
464	Change Order		Buy-In Data Maintenance			2

3.12.12.1 Desired Solution
There is a need to modify the BIA-1013-M report.

3.12.12.2 Business Impact
None.

3.12.12.3 Technical Specifications
Modify the report as follows:

- Add column for QMB Dual;
- Change text "Other" to "MAO/Other"; and,
- Add count of transactions.

3.12.12.4 Clarifications
No associated clarifications found.

3.12.12.5 Associated Requirements

Requirement ID	Type
30.090.001.001.2	RFP Requirement

3.12.12.6 Associated System Objects

Technical Name	Object Type	Title
BIA-1013-M	Report	Buy-In Part A Premium Totals

3.12.12.7 Change Order Status

Status	Date
Issue Identified	08/12/2005
Change Order Written	09/19/2005
Sign-Off Requested	10/11/2005
Change Order Written	10/11/2005
SE Assigned	02/13/2006
Technical Design In Progress (obsolete)	02/13/2006
Ready for Tech Walkthrough	02/15/2006
Ready for Construction Walkthrough	02/23/2006

Status	Date
Ready for Model Office	03/06/2006
Model Office Implemented	03/24/2006
UAT Implemented	11/01/2006
Prod Implemented	06/14/2007

3.12.13 Modify BIB-2001-M Report - 465

Identifier	Type	Level	Subsystem	Computed	Estimated	Priority
465	Change Order		Buy-In Data Maintenance			2

3.12.13.1 Desired Solution
There is a need to modify the BIB-2001-M report.

3.12.13.2 Business Impact
None.

3.12.13.3 Technical Specifications
Modify the report as follows:

- Change the column heading "MEDICARE ID" to "HIC";
- Move the MEDICAID ID column to the far left; and,
- Sort by MEDICAID ID.

3.12.13.4 Clarifications
No associated clarifications found.

3.12.13.5 Associated Requirements

Requirement ID	Type
30.090.001.001.2	RFP Requirement

3.12.13.6 Associated System Objects

Technical Name	Object Type	Title
BIB-2001-M	Report	Buy-In Part B Billing (Receiving)

3.12.13.7 Change Order Status

Status	Date
Issue Identified	08/12/2005
Change Order Written	09/21/2005
Sign-Off Requested	10/11/2005
Change Order Written	10/11/2005
Ready for Construction Walkthrough	01/31/2006
Ready for Model Office	02/02/2006
Model Office Implemented	03/24/2006
UAT Implemented	11/01/2006

Status	Date
Prod Implemented	06/14/2007

3.12.14 Modify BIB-2002-M Report - 466

Identifier	Type	Level	Subsystem	Computed	Estimated	Priority
466	Change Order		Buy-In Data Maintenance			2

3.12.14.1 Desired Solution
There is a need to modify the BIB-2002-M report.

3.12.14.2 Business Impact
None.

3.12.14.3 Technical Specifications
Modify the report as follows:

- Change the column heading "MEDICARE ID" to "HIC";
- Move the MEDICAID ID column to the far left;
- Sort by MEDICAID ID; and,
- Add column "END DATE".

3.12.14.4 Clarifications
From Defect 6723, it was agreed to remove the ZIP while fixing the Defect. See attached email PDF and new report layouts. (Duncan)

3.12.14.5 Associated Requirements

Requirement ID	Type
30.090.001.001.2	RFP Requirement

3.12.14.6 Associated System Objects

Technical Name	Object Type	Title
BIB-2002-M	Report	Buy-In Part B Input Transactions Within interChange

3.12.14.7 Change Order Status

Status	Date
Issue Identified	08/12/2005
Change Order Written	09/21/2005
Sign-Off Requested	10/11/2005
Change Order Written	10/11/2005
Ready for Construction Walkthrough	01/31/2006
Ready for Model Office	02/02/2006
Model Office Implemented	03/24/2006

Status	Date
UAT Implemented	11/01/2006
Prod Implemented	06/14/2007

3.12.15 Modify BIB-2004-M Report - 467

Identifier	Type	Level	Subsystem	Computed	Estimated	Priority
467	Change Order		Buy-In Data Maintenance			2

3.12.15.1 Desired Solution
There is a need to modify the BIB-2004-M report.

3.12.15.2 Business Impact
None.

3.12.15.3 Technical Specifications
Modify the report as follows:

- Sort by transaction code;
- Add transaction 49XX to selection;
- Add program code and status code columns;
- Add a break with summary counter when the transaction code changes.

3.12.15.4 Clarifications
No associated clarifications found.

3.12.15.5 Associated Requirements

Requirement ID	Type
30.090.001.001.2	RFP Requirement

3.12.15.6 Associated System Objects

Technical Name	Object Type	Title
BIB-2004-M	Report	Buy-In Part B Exception Error By Transaction Code

3.12.15.7 Change Order Status

Status	Date
Issue Identified	08/12/2005
Change Order Written	09/19/2005
Sign-Off Requested	10/11/2005
Change Order Written	10/11/2005
Construction in Progress	01/31/2006
Ready for Construction Walkthrough	02/07/2006
Ready for Model Office	02/07/2006

Status	Date
Model Office Implemented	03/24/2006
UAT Implemented	11/01/2006
Prod Implemented	06/14/2007

3.12.16 Modify BIB-2011-M Report - 468

Identifier	Type	Level	Subsystem	Computed	Estimated	Priority
468	Change Order		Buy-In Data Maintenance			2

3.12.16.1 Desired Solution
There is a need to modify the BIB-2011-M report.

3.12.16.2 Business Impact
None.

3.12.16.3 Technical Specifications
Modify program to:

- Change "BENEFICIARY" to "MEMBER";
- Add status code to detail line; and,
- Generate break by Population/Status Code.

3.12.16.4 Clarifications
No associated clarifications found.

3.12.16.5 Associated Requirements

Requirement ID	Type
30.090.001.001.2	RFP Requirement

3.12.16.6 Associated System Objects

Technical Name	Object Type	Title
BIB-2011-M	Report	Buy-In Part B State Totals by Member Population

3.12.16.7 Change Order Status

Status	Date
Issue Identified	08/12/2005
Change Order Written	09/19/2005
Sign-Off Requested	10/11/2005
Change Order Written	10/11/2005
SE Assigned	02/08/2006
Technical Design In Progress (obsolete)	02/10/2006
Ready for Tech Walkthrough	02/10/2006
Construction in Progress	02/12/2006

Status	Date
Unit Test in Progress (obsolete)	02/12/2006
Ready for Construction Walkthrough	02/12/2006
Ready for Model Office	02/13/2006
Model Office Implemented	03/24/2006
UAT Implemented	11/01/2006
Prod Implemented	06/14/2007

3.12.17 Modify BIB-2013-M Report - 469

Identifier	Type	Level	Subsystem	Computed	Estimated	Priority
469	Change Order		Buy-In Data Maintenance			2

3.12.17.1 Desired Solution
There is a need to modify the BIB-2013-M report.

3.12.17.2 Business Impact
None.

3.12.17.3 Technical Specifications
Modify the report as follows:

- Add columns for QMB, QMB Dual, SLMB, SLMB Dual, QI1, Cash;
- Change text "Other" to "MAO/Other"; and,
- Add count of transactions.

3.12.17.4 Clarifications
No associated clarifications found.

3.12.17.5 Associated Requirements

Requirement ID	Type
30.090.001.001.2	RFP Requirement

3.12.17.6 Associated System Objects

Technical Name	Object Type	Title
BIB-2013-M	Report	Buy-In Part B Premium Totals

3.12.17.7 Change Order Status

Status	Date
Issue Identified	08/12/2005
Change Order Written	09/19/2005
Sign-Off Requested	10/11/2005
Change Order Written	10/11/2005
Technical Design In Progress (obsolete)	02/15/2006
Construction in Progress	03/10/2006
Ready for Construction Walkthrough	03/10/2006
Ready for Model Office	03/17/2006

Status	Date
Model Office Implemented	03/24/2006
UAT Implemented	11/01/2006
Prod Implemented	06/14/2007

3.12.18 Billing Process Error Report - 476

Identifier	Type	Level	Subsystem	Computed	Estimated	Priority
476	Change Order		Buy-In Data Maintenance			2

3.12.18.1 Desired Solution
There is a need to duplicate the KYMQ1200-R001 report.

3.12.18.2 Business Impact
None.

3.12.18.3 Technical Specifications
A new program, buypm401, has been written to produce the report using the following criteria:

- The T_BUYA_ERROR and T_BUYB_ERROR tables are scanned for all rows within the given dates from T_SYSTEM_PARMS for 'AIMBUYIN'.
- The DSC_COMPLETE_TXN field are extracted. This field is the original, failed transaction from CMS. The report is formatted from this record.

3.12.18.4 Clarifications
No associated clarifications found.

3.12.18.5 Associated Requirements

Requirement ID	Type
30.090.001.001.2	RFP Requirement

3.12.18.6 Associated System Objects

Technical Name	Object Type	Title
buypm401	Program	Billing Process Error Report
BUY-4001-M	Report	Buy-In Billing Process Error
BUYJM401	Batch Job	Buy-In Billing Process Error Report

3.12.18.7 Change Order Status

Status	Date
Issue Identified	08/16/2005
Sign-Off Requested	10/11/2005
Change Order Written	10/19/2005
Technical Design In Progress (obsolete)	02/24/2006
Ready for Tech Walkthrough	03/07/2006
Construction in Progress	03/09/2006

Status	Date
Ready for Construction Walkthrough	03/09/2006
Ready for Model Office	03/10/2006
Model Office Implemented	03/24/2006
UAT Implemented	11/01/2006
Prod Implemented	06/14/2007

3.12.19 Original ID Change Report - 478

Identifier	Type	Level	Subsystem	Computed	Estimated	Priority
478	Change Order		Buy-In Data Maintenance			2

3.12.19.1 Desired Solution
There is a need to duplicate the KYMQ1203-R001 report.

3.12.19.2 Business Impact
None.

3.12.19.3 Technical Specifications
A new program, buypm403, has been created to produce the report using the following criteria:

- Tables T_BUYA_BILL, T_BUYB_BILL, T_BUYA_BILL_INFO and T_BUYB_BILL_INFO are searched for '23' transactions during the current processing month.
- The table row is used to produce the report.

3.12.19.4 Clarifications
No associated clarifications found.

3.12.19.5 Associated Requirements

Requirement ID	Type
30.090.001.001.2	RFP Requirement

3.12.19.6 Associated System Objects

Technical Name	Object Type	Title
BUY-4003-M	Report	Buy-In Original ID Change
BUYJM403	Batch Job	Buy-In Original ID Change Report
buypm403	Program	Original ID Change Report

3.12.19.7 Change Order Status

Status	Date
Issue Identified	08/16/2005
Sign-Off Requested	10/17/2005
Change Order Written	10/19/2005
Technical Design In Progress (obsolete)	02/21/2006
Ready for Tech Walkthrough	02/22/2006
Construction in Progress	02/27/2006
Ready for Construction	02/28/2006

Status	Date
Walkthrough	
Ready for Model Office	03/09/2006
Model Office Implemented	03/24/2006
UAT Implemented	11/01/2006
Prod Implemented	06/14/2007

3.12.20 Buy-In Death Report - 479

Identifier	Type	Level	Subsystem	Computed	Estimated	Priority
479	Change Order		Buy-In Data Maintenance			2

3.12.20.1 Desired Solution
There is a need to duplicate the KYMQ1205-R002 report.

3.12.20.2 Business Impact
None.

3.12.20.3 Technical Specifications
A new program, buypm404, has been written to produce the report using the following criteria:

- The incoming transaction files from CMS are read to determine if a date of date exists.
- The transaction from CMS is formatted to produce the report.

3.12.20.4 Clarifications
Date of Death from CMS CMS sends three different transactions to indicate a member has died, depending upon the original transaction sent by iC. The following are the three transactions to search the billing files for, along with the RIC and date position:

- Transaction 16xx - RIC B, position 82-87 (CCYYMM). If not RIC B, then use spaces as the date;
- Transaction 42xx - RIC B, position 82-87 (CCYYMM). If not RIC B, then use spaces as the date; and,
- Transaction 29xx - RIC F, position 97-102 (CCYYMM). If not RIC F, then use spaces as the date.

In discussion with Kelli O'Brien and Cliff Robey of the Commonwealth, it was decided to use the iC database to produce this report instead of the CMS file.

- T_BUYA_BILL and T_BUYB_BILL is selected and used in cursors that joint to T_RE_BASE.
- DTE_EFFECTIVE is used as the date of death.

3.12.20.5 Associated Requirements

Requirement ID	Type
30.090.001.001.2	RFP Requirement

3.12.20.6 Associated System Objects

Technical Name	Object Type	Title
BUYJM404	Batch Job	Buy-In Death Report
BUY-4004-M	Report	Buy-In Death
buypm404	Program	Buy-In Death Report

3.12.20.7 Change Order Status

Status	Date
Issue Identified	08/16/2005
Sign-Off Requested	10/17/2005
Change Order Written	10/19/2005
SE Assigned	02/01/2006
Technical Design In Progress (obsolete)	02/02/2006
Ready for Construction Walkthrough	02/08/2006
Unit Test in Progress (obsolete)	02/08/2006
Ready for Construction Walkthrough	02/09/2006
Ready for Model Office	02/10/2006
Model Office Implemented	03/24/2006
UAT Implemented	11/01/2006
Prod Implemented	06/14/2007

3.12.21 Retroactive Buyin Accrete Report - 480

Identifier	Type	Level	Subsystem	Computed	Estimated	Priority
480	Change Order		Buy-In Data Maintenance			2

3.12.21.1 Desired Solution
There is a need to duplicate the KYMQ1205-R005 report.

3.12.21.2 Business Impact
None.

3.12.21.3 Technical Specifications
A new program, buypm405, has been written to produce the report using the following criteria:

- The tables T_BUYA_BILL and T_BUYB_BILL are read to select successful transactions where the accretion date is before the current processing month; and,
- The original transaction is formatted to produce the report.

3.12.21.4 Clarifications
No associated clarifications found.

3.12.21.5 Associated Requirements

Requirement ID	Type
30.090.001.001.2	RFP Requirement

3.12.21.6 Associated System Objects

Technical Name	Object Type	Title
BUYJM405	Batch Job	Buy-In Accretion Report
BUY-4005-M	Report	Buy-In Accrete
buypm405	Program	Buy-In Accrete Report

3.12.21.7 Change Order Status

Status	Date
Issue Identified	08/16/2005
Sign-Off Requested	10/17/2005
Change Order Written	10/19/2005
Technical Design In Progress (obsolete)	02/22/2006
Ready for Tech Walkthrough	02/22/2006
Construction in Progress	02/23/2006
Ready for Construction	02/23/2006

Status	Date
Walkthrough	
Ready for Model Office	03/07/2006
Model Office Implemented	03/24/2006
UAT Implemented	11/01/2006
Prod Implemented	06/14/2007

3.12.22 Transaction to CMS Summary Rpt - 481

Identifier	Type	Level	Subsystem	Computed	Estimated	Priority
481	Change Order		Buy-In Data Maintenance			2

3.12.22.1 Desired Solution
There is a need to duplicate the KYMQ2000-R001 report.

3.12.22.2 Business Impact
None.

3.12.22.3 Technical Specifications
A new program, buypm406, has been written to produce the report using the following criteria:

- Tables T_BUYA_PREM and T_BUYB_PREM are scanned for transactions that have occurred during the current AIMBUYIN month with IND_SHIPPED = 'Y';
- Transaction code 41 is excluded from the scan;
- Counters for the transaction code by Part A and Part B are kept;
- The counters are printed in the report; and,
- Report is sorted by Part, then transaction code.

3.12.22.4 Clarifications
No associated clarifications found.

3.12.22.5 Associated Requirements

Requirement ID	Type
30.090.001.001.2	RFP Requirement

3.12.22.6 Associated System Objects

Technical Name	Object Type	Title
BUY-4006-M	Report	Buy-In Transaction To CMS Summary
buypm406	Program	Transaction to CMS Summary Report
BUYJM406	Batch Job	Buy-In Transactions to CMS Summary Report

3.12.22.7 Change Order Status

Status	Date
Issue Identified	08/16/2005
Sign-Off Requested	10/12/2005
Change Order Written	10/19/2005
Technical Design In Progress (obsolete)	02/27/2006
Ready for Tech Walkthrough	02/28/2006
Construction in Progress	03/06/2006
Ready for Construction Walkthrough	03/06/2006
Ready for Model Office	03/07/2006
Model Office Implemented	03/24/2006
UAT Implemented	11/01/2006
Prod Implemented	06/14/2007

3.12.23 Manual Transactions Submitted - 482

Identifier	Type	Level	Subsystem	Computed	Estimated	Priority
482	Change Order		Buy-In Data Maintenance			2

3.12.23.1 Desired Solution
There is a need to duplicate the KYMQ2010-R001 report.

3.12.23.2 Business Impact
None.

3.12.23.3 Technical Specifications
A new program, buypm407, has been written to produce the report using the following parameters:

- The T_BUYA_PREM and T_BUYB_PREM tables are scanned for rows with a IND_SOURCE of 'M' and a DTE_LAST_UPDATED within the last month; and,
- These rows are formatted into the report.

3.12.23.4 Clarifications
No associated clarifications found.

3.12.23.5 Associated Requirements

Requirement ID	Type
30.090.001.001.2	RFP Requirement

3.12.23.6 Associated System Objects

Technical Name	Object Type	Title
BUY-4007-M	Report	Buy-In Manual Transactions Submitted
buypm407	Program	Manual Transactions Submitted Report
BUYJM407	Batch Job	Buy-In Manual Transactions Submitted Report

3.12.23.7 Change Order Status

Status	Date
Issue Identified	08/16/2005
Sign-Off Requested	10/12/2005
Change Order Written	10/19/2005
Technical Design In Progress (obsolete)	02/19/2006
Ready for Tech Walkthrough	02/21/2006
Construction in Progress	02/21/2006

Status	Date
Ready for Construction Walkthrough	02/23/2006
Ready for Model Office	02/27/2006
Model Office Implemented	03/24/2006
UAT Implemented	11/01/2006
Prod Implemented	06/14/2007

3.12.24 Matching Transactions Report - 483

Identifier	Type	Level	Subsystem	Computed	Estimated	Priority
483	Change Order		Buy-In Data Maintenance			2

3.12.24.1 Desired Solution
There is a need to duplicate the KYMQ7000-R001 report.

3.12.24.2 Business Impact
None.

3.12.24.3 Technical Specifications
A new program, buypm408, has been written to produce the report using the following criteria:

- The previous input transmitted to CMS are compared against the newest billing file; and,
- Transactions that match in premium are written to this report.

3.12.24.4 Clarifications
No associated clarifications found.

3.12.24.5 Associated Requirements

Requirement ID	Type
30.090.001.001.2	RFP Requirement

3.12.24.6 Associated System Objects

Technical Name	Object Type	Title
BUY-4008-M	Report	Buy-In Matching Transactions
BUYJM408	Batch Job	Buy-In Matching Transactions Report
buypm408	Program	Matching Transactions Report

3.12.24.7 Change Order Status

Status	Date
Issue Identified	08/16/2005
Sign-Off Requested	10/11/2005
Change Order Written	10/12/2005
SE Assigned	03/02/2006
Define/Analyze In Progress	03/02/2006
Construction in Progress	03/09/2006
Ready for Construction Walkthrough	03/10/2006

Status	Date
Ready for Model Office	03/14/2006
Model Office Implemented	03/24/2006
UAT Implemented	11/01/2006
Prod Implemented	06/14/2007

3.12.25 Recipients Not Billed Report - 484

Identifier	Type	Level	Subsystem	Computed	Estimated	Priority
484	Change Order		Buy-In Data Maintenance			2

3.12.25.1 Desired Solution
There is a need to duplicate the KYMQ7000-R002 report.

3.12.25.2 Business Impact
None.

3.12.25.3 Technical Specifications
A new program, buypm409, has been written to produce the report using the following criteria:

- Tables T_BUYA_BILL and T_BUYB_BILL are scanned for members billed last month but not billed this month;
- Tables T_BUYA_PREM and T_BUYB_PREM are scanned for members deleted in the last billing month; and,
- The results from the PREM tables are subtracted from the population returned in the BILL tables. The remaining members are printed.

3.12.25.4 Clarifications
No associated clarifications found.

3.12.25.5 Associated Requirements

Requirement ID	Type
30.090.001.001.2	RFP Requirement

3.12.25.6 Associated System Objects

Technical Name	Object Type	Title
buypm409	Program	Recipients Not Billed Report
BUY-4009-M	Report	Buy-In Members Not Billed
BUYJM409	Batch Job	Buy-In Recipients Not Billed Report

3.12.25.7 Change Order Status

Status	Date
Issue Identified	08/16/2005
Sign-Off Requested	10/11/2005
Change Order Written	10/12/2005
SE Assigned	03/14/2006
Design Complete	03/14/2006

Status	Date
Construction in Progress	03/14/2006
Ready for Construction Walkthrough	03/16/2006
Ready for Model Office	03/17/2006
Model Office Implemented	03/24/2006
UAT Implemented	11/01/2006
Prod Implemented	06/14/2007

3.12.26 Unmatched Recipients Billed - 485

Identifier	Type	Level	Subsystem	Computed	Estimated	Priority
485	Change Order		Buy-In Data Maintenance			2

3.12.26.1 Desired Solution
There is a need to duplicate the KYMQ7000-R003 report.

3.12.26.2 Business Impact
None.

3.12.26.3 Technical Specifications
A new program, buypm410, has been written to produce the report using the following criteria:

- The tables T_BUYA_MISMATCH and T_BUYB_MISMATCH are scanned for rows where CMS billed for members we cannot match in the current billing month; and,
- Rows returned from the scan are formatted into the report.

3.12.26.4 Clarifications
No associated clarifications found.

3.12.26.5 Associated Requirements

Requirement ID	Type
30.090.001.001.2	RFP Requirement

3.12.26.6 Associated System Objects

Technical Name	Object Type	Title
BUYJM410	Batch Job	Buy-In Unmatched Recipients Billed Report
buypm410	Program	Unmatched Recipients Billed Report
BUY-4010-M	Report	Buy-In Unmatched Members Billed

3.12.26.7 Change Order Status

Status	Date
Issue Identified	08/16/2005
Sign-Off Requested	10/11/2005
Change Order Written	10/12/2005
SE Assigned	02/16/2006
Technical Design In Progress (obsolete)	02/16/2006
Ready for Tech Walkthrough	02/17/2006
Construction in Progress	02/17/2006

Status	Date
Unit Test in Progress (obsolete)	02/17/2006
Ready for Construction Walkthrough	02/17/2006
Ready for Model Office	02/21/2006
Model Office Implemented	03/24/2006
UAT Implemented	11/01/2006
Prod Implemented	06/14/2007

3.12.27 Misc Debit/Credit Transactions - 486

Identifier	Type	Level	Subsystem	Computed	Estimated	Priority
486	Change Order		Buy-In Data Maintenance			2

3.12.27.1 Desired Solution
There is a need to duplicate the KYMQ7000-R004 report.

3.12.27.2 Business Impact
None.

3.12.27.3 Technical Specifications
A new program, buypm411, has been written to produce the report using the following criteria:

- Tables T_BUYA_BILL, T_BUYB_BILL, T_BUYA_PREM and T_BUYB_PREM are scanned to locate rows with transactions 41, 50, 51, 53, 61, 7150, 1751, 1753, or 1161 for the current processing month; and,
- Rows returned are formatted for the report.

3.12.27.4 Clarifications
No associated clarifications found.

3.12.27.5 Associated Requirements

Requirement ID	Type
30.090.001.001.2	RFP Requirement

3.12.27.6 Associated System Objects

Technical Name	Object Type	Title
BUY-4011-M	Report	Buy-In Misc Debit Credit
buypm411	Program	Misc Debit/Credit Report
BUYJM411	Batch Job	Buy-In Misc Debit/Credit Report

3.12.27.7 Change Order Status

Status	Date
Issue Identified	08/16/2005
Sign-Off Requested	10/17/2005
Change Order Written	10/19/2005
Technical Design In Progress (obsolete)	02/24/2006
Ready for Tech Walkthrough	02/27/2006
Construction in Progress	02/28/2006

Status	Date
Ready for Construction Walkthrough	02/28/2006
Ready for Model Office	03/07/2006
Model Office Implemented	03/24/2006
UAT Implemented	11/01/2006
Prod Implemented	06/14/2007

3.12.28 Create New CMS Datamodel - 488

Identifier	Type	Level	Subsystem	Computed	Estimated	Priority
488	Change Order		Buy-In Data Maintenance			1

3.12.28.1 Desired Solution
There is a need to use the "new" Buy-In file layout from CMS.

3.12.28.2 Business Impact
None.

3.12.28.3 Technical Specifications
A new database model has been created to support the new file layout from CMS and its logic changes. Differences to account for include:

- Actual record changes; and,
- Underlying processing changes such as the addition of end dates.

In addition, some table names and column names are changes to reduce confusion in the naming schema.

3.12.28.4 Clarifications
No associated clarifications found.

3.12.28.5 Associated Requirements

Requirement ID	Type
30.090.001.002.3	Interfaces - Incoming

3.12.28.6 Associated System Objects

Technical Name	Object Type	Title
No associated Change Orders found.		

3.12.28.7 Change Order Status

Status	Date
Issue Identified	08/16/2005
Define/Analyze In Progress	10/26/2005
Ready for Tech Walkthrough	11/28/2005
Construction in Progress	11/28/2005
Ready for Model Office	01/10/2006
Model Office Implemented	04/13/2006
Ready for Model Office	08/25/2006
Model Office Implemented	09/08/2006

Status	Date
UAT Implemented	11/01/2006
Prod Implemented	06/14/2007

3.12.29 Buy-In Alternate Demographics - 489

Identifier	Type	Level	Subsystem	Computed	Estimated	Priority
489	Change Order		Buy-In Data Maintenance			2

3.12.29.1 Desired Solution
There is a need to substitute the demographics received from CMS into the Buy-In Input File transmited to CMS.

3.12.29.2 Business Impact
None.

3.12.29.3 Technical Specifications
A new program, buypmalt, has been written to accomplish the following:

- Read the outbound Part A and Part B files;
- Retrieve the most recent EDB record for the member. Match using the Medicaid ID through T_RE_BASE to get sak_recip; and,
- Substitute the alternate demographics from T_RE_EDB.

The following fields are substituted:

- First Name;
- Middle Initial;
- Last Name;
- Sex;
- Date of birth;
- HIC; and,
- SSN.

3.12.29.4 Clarifications
The BUYPMALT program is not in a separate batch job but instead is rolled into BUYSJM.

The outside vendor HMS is providing this functionality at the time of implementation.

Steve Russell - Reviewed CO for Post Go Live validity.

This CO was written during the RV/JAD. Since then, two significant things have occurred: HMS has taken over Buy-in processing and interChange now processed Buy-In very differently (particularly since UAT resulted in new COs and many modifications).

I suspect that this CO is no longer valid. I request the TFAL review for validity and suggest cancellation.

Based on the changes since RV/JAD, this CO is no longer valid.

3.12.29.5 Associated Requirements

Requirement ID	Type
30.090.001.002.N02	Interfaces - Incoming
30.090.001.002.N03	Interfaces - Incoming

3.12.29.6 Associated System Objects

Technical Name	Object Type	Title
buypmalt	Program	Alternate Demographics Patch

3.12.29.7 Change Order Status

Status	Date
Issue Identified	08/17/2005
Change Order Written	09/19/2005
Sign-Off Requested	10/11/2005
Change Order Written	10/19/2005
Ready for Tech Walkthrough	02/07/2006
Construction in Progress	02/09/2006
Ready for Construction Walkthrough	02/13/2006
Ready for Model Office	02/22/2006
Deferred	03/22/2006

3.12.30 EDB-HIC Cross-Reference Report - 506

Identifier	Type	Level	Subsystem	Computed	Estimated	Priority
506	Change Order		Buy-In Data Maintenance			2

3.12.30.1 Desired Solution
There is a need to duplicate the KYMR2400-R001 report.

3.12.30.2 Business Impact
None.

3.12.30.3 Technical Specifications
A new program, buypm506, has been written to produce the report according to the following parameters:

- T_RE_PS2_LOG is scanned for rows using a CDE_SOURCE of "EDB"; and,
- The original transaction (field DSC_COMPLETE_TXN) is extracted and formatted to produce the report.

3.12.30.4 Clarifications
No associated clarifications found.

3.12.30.5 Associated Requirements

Requirement ID	Type
30.090.001.004.6	Interfaces - Incoming

3.12.30.6 Associated System Objects

Technical Name	Object Type	Title
BUY-5008-M	Report	EDB-HIC Cross Reference
buypm508	Program	EDB-HIC Cross Reference
BUYJM508	Batch Job	EDB-HIC Cross Reference Report

3.12.30.7 Change Order Status

Status	Date
Issue Identified	08/18/2005
Sign-Off Requested	10/14/2005
Change Order Written	10/19/2005
SE Assigned	03/14/2006
Define/Analyze In Progress	03/16/2006
Design Complete	03/21/2006
Construction in Progress	03/21/2006

Status	Date
Ready for Construction Walkthrough	03/23/2006
Ready for Model Office	03/30/2006
Model Office Implemented	04/14/2006
UAT Implemented	11/01/2006
Prod Implemented	06/14/2007

3.12.31 EDB Finder File Extract - 1077

Identifier	Type	Level	Subsystem	Computed	Estimated	Priority
1077	Change Order		Buy-In Data Maintenance			1

3.12.31.1 Desired Solution
There is a need to provide an eligibility extract to transmit to CMS.

3.12.31.2 Business Impact
None.

3.12.31.3 Technical Specifications
A new program, buypm521, has been written to extract a list of members to be sent as a finder file to CMS. The list is to be generated as follows:

- The program accepts a command-line argument to determine whether to send only active members or all members;
- For active members, the member must have an active eligibility segment in T_RE_AID_ELIG; and,
- The list is distinct. Each member has only one record, no matter the number of eligibility segments.

Refer to Supplemental Documentation for the output record layout.

3.12.31.4 Clarifications
No associated clarifications found.

3.12.31.5 Associated Requirements

Requirement ID	Type
30.090.001.004.6	Interfaces - Incoming

3.12.31.6 Associated System Objects

Technical Name	Object Type	Title
elgpm153	Program	EDB Extract file
ELGJM153	Batch Job	EDB Extract File

3.12.31.7 Change Order Status

Status	Date
Issue Identified	09/19/2005
Change Order Written	09/21/2005
Sign-Off Requested	10/11/2005
Change Order Written	10/19/2005
Construction in Progress	01/10/2006

Status	Date
Ready for Model Office	02/07/2006
Model Office Implemented	03/17/2006
UAT Implemented	11/01/2006
Prod Implemented	06/14/2007

3.12.32 Buy-In A Combined Panel - 1078

Identifier	Type	Level	Subsystem	Computed	Estimated	Priority
1078	Change Order		Buy-In Data Maintenance			1

3.12.32.1 Desired Solution
There is a need to create a new panel combining the Medicare A Buy-In Bill and Medicare A Buy-In Premium panels.

3.12.32.2 Business Impact
None.

3.12.32.3 Technical Specifications
A new panel, BuyACombined, has been created to provide a unified view of Buy-In bills and premiums using the following criteria:

- The SAK_RECIP of the member is used to look up that member's data. It is passed transparently from the Member page;
- A SQL UNION has been created to retrieve rows from both T_BUYA_BILL and T_BUYA_PREM;
- Default sort is by date descending; and,
- Two detail panels are used, one for Bills and one for Premiums.

The following new fields are to be added to the Bill panel:

- DTE_END

The following fields are to be added to the Premium panel:

- DTE_EFFECTIVE;
- DTE_END; and,
- IND_SOURCE.

The obsolete bill and premium panels have been removed.

3.12.32.4 Clarifications
No associated clarifications found.

3.12.32.5 Associated Requirements

Requirement ID	Type
30.090.001.001.2	RFP Requirement

3.12.32.6 Associated System Objects

Technical Name	Object Type	Title
Medicare Buy-In A	Panel	Medicare Buy-In A Combined

3.12.32.7 Change Order Status

Status	Date
Issue Identified	09/19/2005
Sign-Off Requested	10/11/2005
Change Order Written	10/12/2005
Design Complete	02/09/2006
Ready for Model Office	02/09/2006
Model Office Implemented	06/09/2006
UAT Implemented	11/01/2006
Prod Implemented	06/14/2007

3.12.33 Buy-In B Combined Panel - 1079

Identifier	Type	Level	Subsystem	Computed	Estimated	Priority
1079	Change Order		Buy-In Data Maintenance			1

3.12.33.1 Desired Solution
There is a need to create a new panel combining the Medicare B Buy-In Bill and Medicare B Buy-In Premium panels.

3.12.33.2 Business Impact
None.

3.12.33.3 Technical Specifications
A new panel, BuyBCombined, has been created to provide a unified view of Buy-In bills and premiums using the following criteria:

- The SAK_RECIP of the member is used to look up that member's data. It is passed transparently from the Member page;
- A SQL UNION has been created to retrieve rows from both T_BUYB_BILL and T_BUYB_PREM;
- Default sort is by date descending; and,
- Two detail panels are used, one for Bills and one for Premiums.

The following fields are to be added to the Bill panel:

- DTE_END; and,
- CDE_BUY_ELIG.

The following fields are to be added to the Premium panel:

- DTE_EFFECTIVE;
- DTE_END;
- CDE_BUY_ELIG; and,
- IND_SOURCE.

The obsolete bill and premium panels have been removed.

3.12.33.4 Clarifications
No associated clarifications found.

3.12.33.5 Associated Requirements

Requirement ID	Type
30.090.001.001.2	RFP Requirement

3.12.33.6 Associated System Objects

Technical Name	Object Type	Title

Technical Name	Object Type	Title
Medicare Buy-In B	Panel	Medicare Buy-In B Combined

3.12.33.7 Change Order Status

Status	Date
Issue Identified	09/19/2005
Sign-Off Requested	10/11/2005
Change Order Written	10/19/2005
Construction in Progress	02/09/2006
Ready for Model Office	03/07/2006
Model Office Implemented	06/09/2006
UAT Implemented	11/01/2006
Prod Implemented	06/14/2007

3.12.34 PCG Buy-In Update - 1080

Identifier	Type	Level	Subsystem	Computed	Estimated	Priority
1080	Change Order		Buy-In Data Maintenance			3

3.12.34.1 Desired Solution
There is a need to accept a file feed of Buy-In information from HMS.

3.12.34.2 Business Impact
None.

3.12.34.3 Technical Specifications
The Buy-In system accepts Part A and Part B billing files created by HMS as replacements for the files received from CMS. The following rules apply:

- HMS only sends records that were successfully applied on their system;
- The files are in the same format as the standard Part A and Part B billing files;
- iC processes these files as if they had come directly from CMS; and,
- The iC Buy-In State Action batch script and other automatic components are disabled.

In addition, a new program, buypm603, has been written to perform the following functions:

- Read the Input files for Part A and Part B created by CMS; and,
- Apply the input files to the Buy-In tables (T_BUYA_PREM and T_BUYB_PREM) as if the records had been generated in interChange Buy-In.

3.12.34.4 Clarifications
No associated clarifications found.

3.12.34.5 Associated Requirements

Requirement ID	Type
30.090.001.002.N02	Interfaces - Incoming

3.12.34.6 Associated System Objects

Technical Name	Object Type	Title
BUYJM605	Batch Job	Buy-In PCG Billing File Update
buypm603	Program	Buy-In PCG Input File update
BUYJM603	Batch Job	Process PCG Input Files
buypm605	Program	Buy-In PCG Billing File Update

3.12.34.7 Change Order Status

Status	Date
Issue Identified	09/19/2005
Sign-Off Requested	10/12/2005
Change Order Written	10/19/2005
Technical Design In Progress (obsolete)	02/10/2006
Construction in Progress	03/22/2006
Ready for Construction Walkthrough	04/10/2006
Ready for Model Office	04/14/2006
Model Office Implemented	04/28/2006
UAT Implemented	11/01/2006
Prod Implemented	06/14/2007

3.12.35 EDB Missing Sequence Report - 1156

Identifier	Type	Level	Subsystem	Computed	Estimated	Priority
1156	Change Order		Buy-In Data Maintenance			2

3.12.35.1 Desired Solution
There is a need to report records sent to CMS in the finder file that are not returned in the EDB database.

3.12.35.2 Business Impact
None.

3.12.35.3 Technical Specifications
A new program, buypm522, has been written to produce the report using the following criteria:

- The most recent finder file and the most recent EDB file are sorted by the MISC-DATA field (position 68, length 13.);
- The files are read sequentially using classic "file-merge" logic; and,
- If a sequence number exists in the finder file but not the EDB file, the finder file record is formatted for the report.

3.12.35.4 Clarifications
No associated clarifications found.

3.12.35.5 Associated Requirements

Requirement ID	Type
30.090.001.004.6	Interfaces - Incoming

3.12.35.6 Associated System Objects

Technical Name	Object Type	Title
ELG-0152-M	Report	EDB Missing Sequence Number
elgpm152	Program	Missing Sequence Number Report

3.12.35.7 Change Order Status

Status	Date
Issue Identified	09/28/2005
Change Order Written	10/05/2005
Sign-Off Requested	10/11/2005
Change Order Written	10/26/2005
Construction in Progress	01/10/2006
Ready for Model Office	02/07/2006

Status	Date
Model Office Implemented	03/17/2006
UAT Implemented	11/01/2006
Prod Implemented	06/14/2007

3.12.36 PCG Buy-In Recon Interface - 1183

Identifier	Type	Level	Subsystem	Computed	Estimated	Priority
1183	Change Order		Buy-In Data Maintenance			3

3.12.36.1 Desired Solution
There is a need to produce a reconcilliation file for Buy-In processing.

3.12.36.2 Business Impact
None.

3.12.36.3 Technical Specifications
A new program, buypm600, has been written to produce a reconciliation file for HMS. This is processed using the following criteria:

- iC receives a billing file from HMS to apply to the Buy-In tables;
- iC Buy-In process processes these records;
- The new program scans the T_BUYx_ERROR, T_BUYx_EXCEPT and T_BUYx_MISMATCH tables and extracts any records with errors. The original transaction record is written to an output file, along with a field indicating the error code;
- The SE interacts with HMS to determine the error codes and their meanings; and,
- This error file is transmitted back to HMS.

3.12.36.4 Clarifications
No associated clarifications found.

3.12.36.5 Associated Requirements

Requirement ID	Type
30.090.001.002.N02	Interfaces - Incoming

3.12.36.6 Associated System Objects

Technical Name	Object Type	Title
BUYJM600	Batch Job	PCG Buy-In Reconcilliation File
buypm600	Program	PCG Reconcilliation File Extract

3.12.36.7 Change Order Status

Status	Date
Issue Identified	09/29/2005
Change Order Written	10/07/2005
Sign-Off Requested	10/11/2005
Change Order Written	10/19/2005
Technical Design In Progress (obsolete)	03/22/2006
Construction in Progress	03/29/2006
Ready for Construction Walkthrough	04/11/2006
Ready for Model Office	04/14/2006
Model Office Implemented	04/28/2006
UAT Implemented	11/01/2006
Prod Implemented	06/14/2007

3.12.37 CMS Batch Receiving System - 1419

Identifier	Type	Level	Subsystem	Computed	Estimated	Priority
1419	Change Order		Buy-In Data Maintenance			1

3.12.37.1 Desired Solution
There is a need to test the New Buy-In Receiving and Sending System in the Kentucky environment.

3.12.37.2 Business Impact
None.

3.12.37.3 Technical Specifications
The New Buy-In System (rewritten to use new CMS layouts) has to be tested in the Kentucky MMIS environment.

3.12.37.4 Clarifications
The outside vendor HMS is providing this functionality at the time of implementation. This change order has not been completed.

Steve Russell - Reviewed CO for Post Go Live validity.

This CO was written during the RV/JAD. Since then, two significant things have occurred: HMS has taken over Buy-in processing and interChange now processed Buy-In very differently (particularly since UAT resulted in new COs and many modifications).

I suspect that this CO is no longer valid. I request the TFAL review for validity and suggest cancellation.

Based on the changes since RV/JAD, this CO is no longer valid.

3.12.37.5 Associated Requirements

Requirement ID	Type
30.090.001.001.2	RFP Requirement
30.090.001.002.3	Interfaces - Incoming

3.12.37.6 Associated System Objects

Technical Name	Object Type	Title
buyrpm	Program	Buy-In Receiving Batch Program
BUYRJM	Batch Job	Buy-In Receiving Job Script

3.12.37.7 Change Order Status

Status	Date
Issue Identified	10/28/2005
Change Order Written	02/14/2006
Ready for Model Office	03/07/2006

Status	Date
Deferred	04/10/2006

3.12.38 CMS State Action System - 1420

Identifier	Type	Level	Subsystem	Computed	Estimated	Priority
1420	Change Order		Buy-In Data Maintenance			1

3.12.38.1 Desired Solution
There is a need to process data received from CMS in the new file format.

3.12.38.2 Business Impact
None.

3.12.38.3 Technical Specifications
None.

3.12.38.4 Clarifications
The outside vendor HMS is providing this functionality at the time of implementation. This change order has not been completed.

Steve Russell - Reviewed CO for Post Go Live validity.

This CO was written during the RV/JAD. Since then, two significant things have occurred: HMS has taken over Buy-in processing and interChange now processed Buy-In very differently (particularly since UAT resulted in new COs and many modifications).

I suspect that this CO is no longer valid. I request the TFAL review for validity and suggest cancellation.

Based on the changes since RV/JAD, this CO is no longer valid.

3.12.38.5 Associated Requirements

Requirement ID	Type
30.090.001.001.2	RFP Requirement
30.090.001.002.3	Interfaces - Incoming

3.12.38.6 Associated System Objects

Technical Name	Object Type	Title
buysapm	Program	Buy-In State Actions Generation Program
BUYSAJM	Batch Job	The Buy-In State Actions Batch Job Script

3.12.38.7 Change Order Status

Status	Date
Issue Identified	10/28/2005
Ready for Tech Walkthrough	01/05/2006
Construction in Progress	01/10/2006
Ready for Construction	02/10/2006

Status	Date
Walkthrough	
Ready for Model Office	02/16/2006
Deferred	03/22/2006

3.12.39 CMS Batch Sending System - 1421

Identifier	Type	Level	Subsystem	Computed	Estimated	Priority
1421	Change Order		Buy-In Data Maintenance			1

3.12.39.1 Desired Solution
There is a need to test the New Buy-In Receiving and Sending System in the Kentucky environment.

3.12.39.2 Business Impact
None.

3.12.39.3 Technical Specifications
The New Buy-In System (rewritten to use new CMS layouts) has to be tested in the Kentucky MMIS environment.

3.12.39.4 Clarifications
The outside vendor HMS is providing this functionality at the time of implementation. This change order has not been completed.

Steve Russell - Reviewed CO for Post Go Live validity.

This CO was written during the RV/JAD. Since then, two significant things have occurred: HMS has taken over Buy-in processing and interChange now processed Buy-In very differently (particularly since UAT resulted in new COs and many modifications).

I suspect that this CO is no longer valid. I request the TFAL review for validity and suggest cancellation.

Based on the changes since RV/JAD, this CO is no longer valid.

3.12.39.5 Associated Requirements

Requirement ID	Type
30.090.001.001.2	RFP Requirement
30.090.001.002.3	Interfaces - Incoming

3.12.39.6 Associated System Objects

Technical Name	Object Type	Title
buyspm	Program	Buy-In Sending Batch Program
BUYSJM	Batch Job	Buy-In Sending Batch Job Script

3.12.39.7 Change Order Status

Status	Date
Issue Identified	10/28/2005
Change Order Written	02/14/2006
Deferred	03/22/2006

3.12.40 EDB Processing Reports - 1464

Identifier	Type	Level	Subsystem	Computed	Estimated	Priority
1464	Change Order		Buy-In Data Maintenance			2

3.12.40.1 Desired Solution
There is a need to produce EDB processing reports.

3.12.40.2 Business Impact
None.

3.12.40.3 Technical Specifications
A new program, buypm523 has been written to process the EDB processing reports using the following criteria:

- Rows are extracted from T_RE_PS2_LOG and T_RE_PS2_ERR where CDE_SOURCE = 'EDB';
- A command-line prompt is passed to this program indicating which specific records to print;
- Appropriate headings are printed, based up on the records being printed; and,
- Rows retrieved are formatted for the report.

Command-line arguments to be passed are:

- A – Add;
- B – Bypassed;
- D – Denied;
- E – Error;
- S – Shutdown; and,
- U – Updated.

3.12.40.4 Clarifications
This is a combination of COs 499, 502, 503, 504, 505 and 1066.

Use the Core EDB report program as the basis for this one.

Layout updated for CO 6873/Defect 7066. See approval email below.

3.12.40.5 Associated Requirements

Requirement ID	Type
30.090.001.004.6	Interfaces - Incoming

3.12.40.6 Associated System Objects

Technical Name	Object Type	Title

Technical Name	Object Type	Title
BUY-5003-M	Report	EDB Entitlement Errors
BUYJM523	Batch Job	EDB Processing Reports
BUY-5006-M	Report	EDB Entitlement Add
BUY-5005-M	Report	EDB Entitlement Shutdown
BUY-5004-M	Report	EDB Entitlement Update
BUY-5007-M	Report	EDB Entitlement Bypass
BUY-5009-M	Report	EDB Entitlement Denied
buypm523	Program	EDB Entitlement Processing Reports

3.12.40.7 Change Order Status

Status	Date
Change Order Written	10/31/2005
SE Assigned	02/14/2006
Technical Design In Progress (obsolete)	02/15/2006
Construction in Progress	02/15/2006
Unit Test in Progress (obsolete)	02/15/2006
Ready for Construction Walkthrough	02/17/2006
Ready for Model Office	02/17/2006
Model Office Implemented	03/16/2006
UAT Implemented	11/01/2006
Prod Implemented	06/14/2007

3.12.41 Buy-In Extract for KMAA - 2029

Identifier	Type	Level	Subsystem	Computed	Estimated	Priority
2029	Change Order		Buy-In Data Maintenance			

3.12.41.1 Desired Solution
There is a need to provide a daily extract of Buy-In changes to KMAA.

3.12.41.2 Business Impact
None.

3.12.41.3 Technical Specifications
A new program, buypdxxx, has been written to run in the daily cycle and accomplish the following:

- Extract all rows from T_BUYA_BILL, T_BUYB_BILL, T_BUYA_PREM and T_BUYB_PREM that have been updated that business day;
- Format the output in the format required by KMAA; and,
- Copy the extract file to the ftp system.

3.12.41.4 Clarifications
No associated clarifications found.

3.12.41.5 Associated Requirements

Requirement ID	Type
30.090.001.001.2	RFP Requirement

3.12.41.6 Associated System Objects

Technical Name	Object Type	Title
No associated Change Orders found.		

3.12.41.7 Change Order Status

Status	Date
Change Order Written	02/02/2006
SE Assigned	02/10/2006
Construction in Progress	02/22/2006
Ready for Construction Walkthrough	02/27/2006
Ready for Model Office	03/10/2006
Model Office Implemented	03/24/2006
UAT Implemented	11/01/2006

Status	Date
Prod Implemented	06/14/2007

3.12.42 Pseudo-41 Transactions - 2073

Identifier	Type	Level	Subsystem	Computed	Estimated	Priority
2073	Change Order		Buy-In Data Maintenance			

3.12.42.1 Desired Solution
There is a need to create Pseudo-41 transactions in the T_BUYA_PREM and T_BUYB_PREM tables.

3.12.42.2 Business Impact
None.

3.12.42.3 Technical Specifications
A new program, buypm604, was written to create "pseudo-41" transactions in the T_BUYA_PREM and T_BUYB_PREM tables. These transactions enable the end users to track bills and premiums more easily.

New rows are inserted into the tables using the following criteria:

- Members are selected from T_BUYA_BILL and T_BUYB_BILL where the transaction code is '41xx', '116x' or '118x';
- Members with a current transaction in T_BUYA_PREM or T_BUYB_PREM are removed from the population first selected;
- Appropriate transaction data is entered; and,
- The IND_SHIPPED field is set to 'Y'. This prevents the transaction from being sent to CMS.

This program was added to the BUYSJM job as step 30.

3.12.42.4 Clarifications
The outside vendor HMS is providing this functionality at the time of implementation. This change order has not been completed.

Steve Russell - Reviewed CO for Post Go Live validity.

This CO was written during the RV/JAD. Since then, two significant things have occurred: HMS has taken over Buy-in processing and interChange now processed Buy-In very differently (particularly since UAT resulted in new COs and many modifications).

I suspect that this CO is no longer valid. I request the TFAL review for validity and suggest cancellation.

Based on the changes since RV/JAD, this CO is no longer valid.

3.12.42.5 Associated Requirements

Requirement ID	Type
No associated Requirements found.	

3.12.42.6 Associated System Objects

Technical Name	Object Type	Title
No associated Change Orders found.		

3.12.42.7 Change Order Status

Status	Date
Issue Identified	02/14/2006
SE Assigned	02/27/2006
Construction in Progress	02/27/2006
Ready for Construction Walkthrough	03/02/2006
Ready for Model Office	03/09/2006
Deferred	03/22/2006

3.12.43 Modify BIA-1010-M BIB-2010-M - 2144

Identifier	Type	Level	Subsystem	Computed	Estimated	Priority
2144	Change Order		Buy-In Data Maintenance			

3.12.43.1 Desired Solution
There is a need to modify the existing BIA-1010-M and BIB-2010-M reports to conform with OnBase and KY standards.

3.12.43.2 Business Impact
None.

3.12.43.3 Technical Specifications
Programs bia1010m.sc and bib2010m.sc were modified to accomplish the following:

- Change cosmetic appearance of report to make report mockup in PWB; and,
- Remove explicit reference to "AIM" in the SQL cursors.

No business logic changes.

3.12.43.4 Clarifications
No associated clarifications found.

3.12.43.5 Associated Requirements

Requirement ID	Type
30.090.001.001.2	RFP Requirement

3.12.43.6 Associated System Objects

Technical Name	Object Type	Title
No associated Change Orders found.		

3.12.43.7 Change Order Status

Status	Date
Issue Identified	03/09/2006
Technical Design In Progress (obsolete)	03/09/2006
Ready for Tech Walkthrough	03/09/2006
Construction in Progress	03/10/2006
Ready for Construction Walkthrough	03/10/2006
Ready for Model Office	03/10/2006
Model Office Implemented	03/24/2006

Status	Date
UAT Implemented	11/01/2006
Prod Implemented	06/14/2007

3.12.44 Update data model - 2258

Identifier	Type	Level	Subsystem	Computed	Estimated	Priority
2258	Change Order		Buy-In Data Maintenance			

3.12.44.1 Desired Solution
There is a need to update the Buy-In Data Model

3.12.44.2 Business Impact
None.

3.12.44.3 Technical Specifications
The demographics fields are being added to T_BUYA_DEMO_CHANGE and T_BUYB_DEMO_CHANGE by EDS. Ensure these changes are promoted into and through the Kentucky data model.

3.12.44.4 Clarifications
The following columns were added to the tables:

- NUM_SSN_EDB; and,
- CDE_RIC.

3.12.44.5 Associated Requirements

Requirement ID	Type
30.090.001.001.2	RFP Requirement

3.12.44.6 Associated System Objects

Technical Name	Object Type	Title
No associated Change Orders found.		

3.12.44.7 Change Order Status

Status	Date
Issue Identified	04/13/2006
Construction in Progress	04/21/2006
Ready for Model Office	05/02/2006
Model Office Implemented	05/05/2006
UAT Implemented	11/01/2006
Prod Implemented	06/14/2007

3.12.45 Modify reports - 2259

Identifier	Type	Level	Subsystem	Computed	Estimated	Priority
2259	Change Order		Buy-In Data Maintenance			

3.12.45.1 Desired Solution
There is a need to modify Buy-In reports.

3.12.45.2 Business Impact
None.

3.12.45.3 Technical Specifications
Modify the following reports to accept an 8-byte MISC_CDE_DTE:

- BIA-1001-M;
- BIA-1004-M;
- BIB-2001-M;
- BIB-2004-M; and,
- BIB-2011-M.

Modify BUY-4001-M to accept the additional error messages from HMS:

- 9002; and,
- 9003.

Add copy2routedir utility to jobs:

- BUYJM404;
- BUYJM409; and,
- BUYJM508.

3.12.45.4 Clarifications
No associated clarifications found.

3.12.45.5 Associated Requirements

Requirement ID	Type
30.090.001.001.2	RFP Requirement

3.12.45.6 Associated System Objects

Technical Name	Object Type	Title
BUYJM409	Batch Job	Buy-In Recipients Not Billed Report
BUYJM508	Batch Job	EDB-HIC Cross Reference Report
BUY-4001-M	Report	Buy-In Billing Process Error

Technical Name	Object Type	Title
BIB-2011-M	Report	Buy-In Part B State Totals by Member Population
BIB-2001-M	Report	Buy-In Part B Billing (Receiving)
BIA-1004-M	Report	Buy-In Part A Exception Error By Transaction Code
BIA-1001-M	Report	Buy-In Part A Billing (Receiving)
BUYJM404	Batch Job	Buy-In Death Report
BIB-2004-M	Report	Buy-In Part B Exception Error By Transaction Code

3.12.45.7 Change Order Status

Status	Date
Issue Identified	04/13/2006
Construction in Progress	04/17/2006
Ready for Construction Walkthrough	04/18/2006
Ready for Model Office	04/20/2006
Model Office Implemented	04/28/2006
Ready for Model Office	05/03/2006
Model Office Implemented	05/22/2006
UAT Implemented	11/01/2006
Prod Implemented	06/14/2007

3.12.46 Part D - Standard Report Text - 2468

Identifier	Type	Level	Subsystem	Computed	Estimated	Priority
2468	Change Order		Buy-In Data Maintenance			

3.12.46.1 Desired Solution
There is a need to adapt the base Part D reports to Kentucky specifications.

3.12.46.2 Business Impact
None.

3.12.46.3 Technical Specifications
In the reports, change the following:

- Change the term "BENEFICIARY NAME" to "NAME";
- Change the term "EBEFICIARY" to "MEDICAID ID";
- Change the term "HIC" to "MEDICARE ID";
- Use standard heading line for report date; and,
- Remove lines of dashes.

3.12.46.4 Clarifications
No associated clarifications found.

3.12.46.5 Associated Requirements

Requirement ID	Type
30.090.001.002.N01	Interfaces - Incoming

3.12.46.6 Associated System Objects

Technical Name	Object Type	Title
ELG-0670-M	Report	Part D Missing PDP Assignments
ELG-0650-M	Report	Part D MMA File Error
ELG-0652-M	Report	Part D MMA Outbound
ELG-0651-M	Report	Part D MMA Inbound
ELG-0660-M	Report	Part D Reconcilliation

3.12.46.7 Change Order Status

Status	Date
Issue Identified	05/10/2006
Construction in Progress	05/23/2006
Ready for Construction Walkthrough	05/24/2006
Ready for Model Office	05/25/2006
Model Office Implemented	06/02/2006
UAT Implemented	11/01/2006
Prod Implemented	06/14/2007

3.12.47 Part D - Convert Core Panels - 2469

Identifier	Type	Level	Subsystem	Computed	Estimated	Priority
2469	Change Order		Buy-In Data Maintenance			

3.12.47.1 Desired Solution
There is a need to promote the Core Medicare Part D panels.

3.12.47.2 Business Impact
None.

3.12.47.3 Technical Specifications
Bring the panels from Core and inspect them for any changes needed to Kentucky standard:

- Change "Recipient" or "Beneficiary" to "Member".

3.12.47.4 Clarifications
No associated clarifications found.

3.12.47.5 Associated Requirements

Requirement ID	Type
30.090.001.002.N01	Interfaces - Incoming

3.12.47.6 Associated System Objects

Technical Name	Object Type	Title
PartDPdpCarrier	Panel	Part D PDP Carrier Search
PartDDualStatusCode	Panel	Part D Dual Status Code
PartDEnrollmentType	Panel	Part D Enrollment Type
PartDPdpAssignment	Panel	Part D PDP Assignment
PartDPdpType	Panel	Part D PDP Type
PartDMmaHistory	Panel	Part D CMS MMA History

3.12.47.7 Change Order Status

Status	Date
Issue Identified	05/10/2006
SE Assigned	05/25/2006
Construction in Progress	06/02/2006
Ready for Construction Walkthrough	06/02/2006
Ready for Model Office	06/02/2006

Status	Date
Model Office Implemented	06/09/2006
UAT Implemented	11/01/2006
Prod Implemented	06/14/2007

3.12.48 Part D - Convert Batch System - 2470

Identifier	Type	Level	Subsystem	Computed	Estimated	Priority
2470	Change Order		Buy-In Data Maintenance			

3.12.48.1 Desired Solution
There is a need to convert the Part D batch system to use the eligibility criteria established by the Commonwealth.

3.12.48.2 Business Impact
None.

3.12.48.3 Technical Specifications
The Part D enrollment process has been modified to accommodate the following:

- Eligibility criteria as established by the Commonwealth;
- Spenddown criteria as established by the Commonwealth;
- Use T_RE_EDB for demographic data instead of T_RE_BASE;
- Use processing date to verify eligibility rather than first of the month; and,
- Ensure retroactive changes are triggered by changes in eligibility and institutional status.

3.12.48.4 Clarifications
The following batch objects have been modified in other change orders and do not need to be promoted again:

- elgpm650;
- elgpm651;
- elgpm652;
- elgpm660;
- elgpm670;
- BUYJD603;
- BUYJM600;
- BUYJM603;
- BUYJM605;
- ELGJM150;
- ELGJM153;
- ELGJM650; and,
- ELGJM653.

During UAT testing, it was discovered that transactions before 1/1/2006 were test transactions, not valid. In discussions with Kelli O'Brien, it was decided to place a "floor" of not reviewing transactions before 1/1/2006 for retroactiveor recon operations. Email is attached.

3.12.48.5 Associated Requirements

Requirement ID	Type
30.090.001.002.N01	Interfaces - Incoming

3.12.48.6 Associated System Objects

Technical Name	Object Type	Title
buypmMMARetro	Program	Part D Retroactive Enrollments
elgpd05m	Program	Part D Daily Recon
buypmMMAMerge	Program	Part D Outbound File Generator
buypmMMAEnroll	Program	Part D Current Month Enrollments
buypmMMARecon	Program	Part D Retroactive Changes to Enrollments
ELGJD111	Batch Job	Part D Daily Reconcilliation

3.12.48.7 Change Order Status

Status	Date
Issue Identified	05/10/2006
Construction in Progress	06/05/2006
Ready for Construction Walkthrough	07/12/2006
Ready for Model Office	07/18/2006
Model Office Implemented	07/24/2006
UAT Implemented	11/01/2006
Prod Implemented	06/14/2007

3.12.49 Modify Buy-In Batch Scripts - 2570

Identifier	Type	Level	Subsystem	Computed	Estimated	Priority
2570	Change Order		Buy-In Data Maintenance			

3.12.49.1 Desired Solution
There is a need to modify the Buy-In batch files and JILs to use the inbound and outbound directories for Kentucky.

3.12.49.2 Business Impact
None.

3.12.49.3 Technical Specifications
Batch scripts and Autosys JILs have been modified to support the EDI directory schema for Kentucky.

JILs:

- Modify file watcher commands to search for inbound files in $DATADIR/buyin/inbound directory.

Batch jobs:

- The utility copy2ftpdir has been replaced with a cp to the $DATADIR/buyin/outbound directory;
- Incoming files are found in the $DATADIR/buyin/inbound directory;
- File name extensions have been changed to reflect the external organization used in transmission (see below); and,
- All working files and gdg members are stored in the $DATADIR/buyin/archive directory.

File extensions to use with external entities:

- CMS – cms;
- HMS – pcg; and,
- KMAA – kmaa.

3.12.49.4 Clarifications
No associated clarifications found.

3.12.49.5 Associated Requirements

Requirement ID	Type
No associated Requirements found.	

3.12.49.6 Associated System Objects

Technical Name	Object Type	Title
No associated Change Orders found.		

3.12.49.7 Change Order Status

Status	Date
Issue Identified	05/18/2006
Construction in Progress	05/22/2006
Ready for Construction Walkthrough	05/23/2006
Ready for Model Office	05/25/2006
Model Office Implemented	06/02/2006
Ready for Model Office	06/12/2006
Construction in Progress	06/14/2006
Ready for Model Office	07/10/2006
Model Office Implemented	07/24/2006
UAT Implemented	11/01/2006
Prod Implemented	06/14/2007

3.12.50 New Table T_RE_CLAWBACK - 2638

Identifier	Type	Level	Subsystem	Computed	Estimated	Priority
2638	Change Order		Buy-In Data Maintenance			

3.12.50.1 Desired Solution
There is a need for a table to track Part D clawback amounts. DCR 01458/CO 251

3.12.50.2 Business Impact
None.

3.12.50.3 Technical Specifications
Table T_RE_CLAWBACK tracks clawback debits and credits assigned by CMS to the Commonwealth. It consists of the following columns:

- SAK_RECIP;
- SAK_SHORT;
- AMT_CLAWBACK; and,
- DTE_CREATED.

SAK_RECIP and SAK_SHORT uniquely identifies the row on a one-to-one basis with T_RE_CMS_MMA_ENROLL.

3.12.50.4 Clarifications
No associated clarifications found.

3.12.50.5 Associated Requirements

Requirement ID	Type
30.090.001.002.N01	Interfaces - Incoming

3.12.50.6 Associated System Objects

Technical Name	Object Type	Title
No associated Change Orders found.		

3.12.50.7 Change Order Status

Status	Date
Issue Identified	06/01/2006
Construction in Progress	06/05/2006
Ready for Model Office	06/27/2006
Model Office Implemented	06/30/2006
UAT Implemented	11/01/2006
Prod Implemented	06/14/2007

3.12.51 Load Clawback Data - 2639

Identifier	Type	Level	Subsystem	Computed	Estimated	Priority
2639	Change Order		Buy-In Data Maintenance			

3.12.51.1 Desired Solution
There is a need to save Part D clawback data. DCR 01458/CO 251

3.12.51.2 Business Impact
None.

3.12.51.3 Technical Specifications
A new program has been written to load clawback data into table T_RE_CLAWBACK. Tables T_RE_CMS_MMA_ENROLL and T_RE_CMS_MMA_RESPONSE are scanned for successful enrollments where the Dual Status code is 02, 04 or 08.

Table T_BUY_PARMS are searched for a row where TXT_PARM = 'CLAW_AMT' to get the actual amount.

3.12.51.4 Clarifications
No associated clarifications found.

3.12.51.5 Associated Requirements

Requirement ID	Type
30.090.001.002.N01	Interfaces - Incoming

3.12.51.6 Associated System Objects

Technical Name	Object Type	Title
No associated Change Orders found.		

3.12.51.7 Change Order Status

Status	Date
Issue Identified	06/01/2006
SE Assigned	06/14/2006
Construction in Progress	06/15/2006
Ready for Construction Walkthrough	06/19/2006
Ready for Model Office	06/26/2006
Model Office Implemented	06/30/2006
UAT Implemented	11/01/2006
Prod Implemented	06/14/2007

3.12.52 New report ELG-0655-M - 2641

Identifier	Type	Level	Subsystem	Computed	Estimated	Priority
2641	Change Order		Buy-In Data Maintenance			

3.12.52.1 Desired Solution
There is a need to produce a Clawback summary report. DCR 01458/CO 251

3.12.52.2 Business Impact
None.

3.12.52.3 Technical Specifications
New program elgpm655 has been written to produce the report.

3.12.52.4 Clarifications
No associated clarifications found.

3.12.52.5 Associated Requirements

Requirement ID	Type
30.090.001.002.N01	Interfaces - Incoming

3.12.52.6 Associated System Objects

Technical Name	Object Type	Title
ELG-0655-M	Report	Part D Liability
elgpm654	Program	Load Clawback amounts

3.12.52.7 Change Order Status

Status	Date
Issue Identified	06/01/2006
Construction in Progress	07/17/2006
Ready for Construction Walkthrough	07/18/2006
Ready for Model Office	07/18/2006
Model Office Implemented	07/24/2006
UAT Implemented	11/01/2006
Prod Implemented	06/14/2007

3.12.53 Modify MMA Panel - 2642

Identifier	Type	Level	Subsystem	Computed	Estimated	Priority
2642	Change Order		Buy-In Data Maintenance			

3.12.53.1 Desired Solution
There is a need to modify the Part D MMA panel.

3.12.53.2 Business Impact
None.

3.12.53.3 Technical Specifications
Modify the Part D MMA Histpry panel as follows:

- Add a column for clawback amount to the left of "Drug coverage". This comes from the T_RE_CLAWBACK table. Note: if the member is NOT a clawback member, there is no row;
- Add the dual-eligibility code to the right of Clawback amount. This displays the actual code received from CMS, not linked to a code table;
- Shift the subsidy information far to the right; and,
- Shift the effective date, end date and created date to the immediate right of the dual-eligibility code.

3.12.53.4 Clarifications
No associated clarifications found.

3.12.53.5 Associated Requirements

Requirement ID	Type
30.090.001.002.N01	Interfaces - Incoming

3.12.53.6 Associated System Objects

Technical Name	Object Type	Title
PartDMmaHistory	Panel	Part D CMS MMA History

3.12.53.7 Change Order Status

Status	Date
Issue Identified	06/01/2006
SE Assigned	07/07/2006
Construction in Progress	07/12/2006
Ready for Model Office	07/12/2006
Model Office Implemented	08/11/2006
UAT Implemented	11/01/2006
Prod Implemented	06/14/2007

3.12.54 Repla Tbl: T_RE_AID_ELIG_STATE - 3064

Identifier	Type	Level	Subsystem	Computed	Estimated	Priority
3064	Change Order		Buy-In Data Maintenance			1

3.12.54.1 Desired Solution
There is a need to replace table T_RE_AID_ELIG_STATE with T_RE_AID_ELIG.

3.12.54.2 Business Impact
None.

3.12.54.3 Technical Specifications
The columns from T_RE_AID_ELIG_STATE are moved to T_RE_AID_ELIG.

Modify the Buy-in programs to read the T_RE_AID_ELIG table for the IMID and Program Status codes.

3.12.54.4 Clarifications
No associated clarifications found.

3.12.54.5 Associated Requirements

Requirement ID	Type
30.090.001.004.2	RFP Requirement

3.12.54.6 Associated System Objects

Technical Name	Object Type	Title
bib2011m	Program	Print Buy-In Part B State Totals by Member Population Report
bia1011m	Program	Print Buy-In Part A State Totals by Member Population Report
bib2004m	Program	Buy-In Part B Exception Error By Transaction Code
bia1004m	Program	Buy-In Part A Exception Error By Transaction Code

3.12.54.7 Change Order Status

Status	Date
Issue Identified	07/05/2006
Construction in Progress	07/13/2006
Ready for Construction Walkthrough	07/17/2006
Ready for Model Office	07/18/2006
Model Office Implemented	07/24/2006
UAT Implemented	11/01/2006
Prod Implemented	06/14/2007

3.12.55 New Table T_BUY_PARTD_LIS - 3312

Identifier	Type	Level	Subsystem	Computed	Estimated	Priority
3312	Change Order		Buy-In Data Maintenance			

3.12.55.1 Desired Solution
There is a need to store manually-entered Part D LIS members. DCR 01442/CO 188

3.12.55.2 Business Impact
None.

3.12.55.3 Technical Specifications
A new table, T_BUY_PARTD_LIS has been created to store manually-entered MIS members. Please see the Supplemental Documentation for other specifications.

3.12.55.4 Clarifications
No associated clarifications found.

3.12.55.5 Associated Requirements

Requirement ID	Type
30.090.001.002.N01	Interfaces - Incoming

3.12.55.6 Associated System Objects

Technical Name	Object Type	Title
T_BUY_PARTD_LIS	Database Table	

3.12.55.7 Change Order Status

Status	Date
Issue Identified	08/07/2006
Ready for DM Review	08/16/2006
DM Review Board Approved	08/22/2006
Ready for Construction Walkthrough	08/23/2006
Ready for Model Office	08/31/2006
Model Office Implemented	09/26/2006
UAT Implemented	11/01/2006
Prod Implemented	06/14/2007

3.12.56 New Panel - Part D LIS - 3313

Identifier	Type	Level	Subsystem	Computed	Estimated	Priority
3313	Change Order		Buy-In Data Maintenance			

3.12.56.1 Desired Solution
There is a need to provide a panel to manually enter Part D LIS member data. DCR 01442/CO 188

3.12.56.2 Business Impact
None.

3.12.56.3 Technical Specifications
A new panel BuyPartDLIS has been created with the following specifications:

- This panel provides for manual entry and editing of the data in the T_BUY_PARTD_LIS table;
- The data in the table is not associated with other tables in interChange. No validation of entered data is performed;
- The default display is of all rows where DTE_SENT = '0';
- Searching of previously sent records is allowed on SSN and HIC; and,
- Data that has been sent to CMS (DTE_SENT not = '0') is non-editable.

See Supplemental Documentation for default column values.

3.12.56.4 Clarifications
No associated clarifications found.

3.12.56.5 Associated Requirements

Requirement ID	Type
30.090.001.002.N01	Interfaces - Incoming

3.12.56.6 Associated System Objects

Technical Name	Object Type	Title
BuyInPartDLis	Panel	Buy-In Part D LIS Manual Entry

3.12.56.7 Change Order Status

Status	Date
Issue Identified	08/07/2006
Change Order Written	08/23/2006
Construction in Progress	08/28/2006
Ready for Model Office	08/30/2006

Status	Date
Model Office Implemented	09/08/2006
UAT Implemented	11/01/2006
Prod Implemented	06/14/2007

3.12.57 Merge Part D LIS - 3314

Identifier	Type	Level	Subsystem	Computed	Estimated	Priority
3314	Change Order		Buy-In Data Maintenance			

3.12.57.1 Desired Solution
Thre is a need to merge the manually-entered LIS members into the outgoing Part D Enrollment File. DCR 01442/CO 188

3.12.57.2 Business Impact
None.

3.12.57.3 Technical Specifications
Program elgpm630 is modified in the following fashion:

- All entries from T_BUY_PARTD_LIS ar selected where DTE_SENT = 0;
- These entries are appropriately formatted and inserted in the Part D Enrollment file; and,
- DTE_SENT are updated to the current processing date.

3.12.57.4 Clarifications
No associated clarifications found.

3.12.57.5 Associated Requirements

Requirement ID	Type
30.090.001.002.N01	Interfaces - Incoming

3.12.57.6 Associated System Objects

Technical Name	Object Type	Title
buypmMMAMerge	Program	Part D Outbound File Generator

3.12.57.7 Change Order Status

Status	Date
Issue Identified	08/07/2006
Define/Analyze In Progress	08/23/2006
Construction in Progress	08/28/2006
Ready for Construction Walkthrough	08/29/2006
Ready for Model Office	08/29/2006
Model Office Implemented	09/08/2006
Model Office Implemented	09/08/2006
UAT Implemented	11/01/2006

Status	Date
Prod Implemented	06/14/2007

3.12.58 Modify EDB Finder File - 3387

Identifier	Type	Level	Subsystem	Computed	Estimated	Priority
3387	Change Order		Buy-In Data Maintenance			2

3.12.58.1 Desired Solution
There is a need to remove the first name, last name, sex and date of birth from the EDB finder file.

3.12.58.2 Business Impact
None.

3.12.58.3 Technical Specifications
Program elgpm153 is modified to produce the EDB Finder File as follows:

- Remove the valid data from the following fields and replace with spaces:
  - First name;
  - Last name;
  - Date of birth; and
  - Sex.

3.12.58.4 Clarifications
No associated clarifications found.

3.12.58.5 Associated Requirements

Requirement ID	Type
30.090.001.004.6	Interfaces - Incoming

3.12.58.6 Associated System Objects

Technical Name	Object Type	Title
No associated Change Orders found.		

3.12.58.7 Change Order Status

Status	Date
Issue Identified	08/15/2006
Define/Analyze In Progress	08/23/2006
Construction in Progress	08/24/2006
Ready for Construction Walkthrough	08/25/2006
Ready for Model Office	08/29/2006
Model Office Implemented	09/08/2006
UAT Implemented	11/01/2006
Prod Implemented	06/14/2007

3.12.59 Modify Buy-In Menu - 3472

Identifier	Type	Level	Subsystem	Computed	Estimated	Priority
3472	Change Order		Buy-In Data Maintenance			

3.12.59.1 Desired Solution
There is a need to modify the Buy-In menu.

3.12.59.2 Business Impact
None.

3.12.59.3 Technical Specifications
Modify the menu structure as follows:

- Move the following panels to Member->Related Data->Other:
  - Buy-In Exceptions A Search;
  - Buy-In Exceptions B Search;
  - Buy-In A Mismatch; and,
  - Buy-In B Mismatch.
- Move the following panel to Member->Related Data->Other:
  - EDB Search (this is currently at Member->EDB)
- Remove the following links:
  - Member->buyIn; and,
  - Member->EDB.

Refer to the Supplemental Documentation for more information.

3.12.59.4 Clarifications
No associated clarifications found.

3.12.59.5 Associated Requirements

Requirement ID	Type
30.090.001.004.2	RFP Requirement

3.12.59.6 Associated System Objects

Technical Name	Object Type	Title
No associated Change Orders found.		

3.12.59.7 Change Order Status

Status	Date
Issue Identified	08/24/2006

Status	Date
Construction in Progress	08/28/2006
SE Assigned	08/30/2006
Ready for Model Office	08/30/2006
Model Office Implemented	09/08/2006
UAT Implemented	11/01/2006
Prod Implemented	06/14/2007

3.12.60 REL2-DCR1178-CO1178-Add PRO recs - 4418

Identifier	Type	Level	Subsystem	Computed	Estimated	Priority
4418	Change Order		Buy-In Data Maintenance			2

3.12.60.1 Desired Solution
There is a need to include PRO members as specified by CMS. DCR1178-CO1178

3.12.60.2 Business Impact
None.

3.12.60.3 Technical Specifications
Modify program elgpm600 as follows:

- Add members who are 64 years, 7 months of age in the month the program is run; and,
- Add all members who are in program codes - F, G, FP, GP, H, HP, J, K, and M.

Members from above must be non-dual eligibility, no active Medicare segment.

3.12.60.4 Clarifications
No associated clarifications found.

3.12.60.5 Associated Requirements

Requirement ID	Type
No associated Requirements found.	

3.12.60.6 Associated System Objects

Technical Name	Object Type	Title
No associated Change Orders found.		

3.12.60.7 Change Order Status

Status	Date
Issue Identified	10/23/2006
Construction in Progress	10/27/2006
Ready for Model Office	11/07/2006
Model Office Implemented	11/17/2006
UAT Implemented	12/05/2006
Prod Implemented	06/14/2007

3.12.61 REL2-Forward PCG files to CMS - 5654

Identifier	Type	Level	Subsystem	Computed	Estimated	Priority
5654	Change Order		Buy-In Data Maintenance			2

3.12.61.1 Desired Solution
There is a need to modify the HMS layouts into the version acepted by CMS and forward for transmission.

3.12.61.2 Business Impact
None.

3.12.61.3 Technical Specifications
Modify program buypm603 to rewrite the records sent from HMS into the standard format required by CMS. Copy the new files into the $FTPDIR/buyin/outbound/cms directory.

3.12.61.4 Clarifications
No associated clarifications found.

3.12.61.5 Associated Requirements

Requirement ID	Type
No associated Requirements found.	

3.12.61.6 Associated System Objects

Technical Name	Object Type	Title
No associated Change Orders found.		

3.12.61.7 Change Order Status

Status	Date
Issue Identified	01/11/2007
Ready for Model Office	01/18/2007
Model Office Implemented	01/26/2007
UAT Implemented	02/01/2007
Prod Implemented	02/01/2007

3.12.62 Send reports to PCG - 5656

Identifier	Type	Level	Subsystem	Computed	Estimated	Priority
5656	Change Order		Buy-In Data Maintenance			2

3.12.62.1 Desired Solution
There is a need to electronicall transfer the BIA-1004-M, BIB-2004-M and BUY-4004-M reports to HMS.

3.12.62.2 Business Impact
None.

3.12.62.3 Technical Specifications
Modify the BIAJM004, BIBJM004 and BUYJM404 scripts to copy the reports to the $FTPDIR/outbound/pcg directory.

3.12.62.4 Clarifications
No associated clarifications found.

3.12.62.5 Associated Requirements

Requirement ID	Type
No associated Requirements found.	

3.12.62.6 Associated System Objects

Technical Name	Object Type	Title
No associated Change Orders found.		

3.12.62.7 Change Order Status

Status	Date
Issue Identified	01/11/2007
Ready for Model Office	01/18/2007
Model Office Implemented	01/26/2007
UAT Implemented	02/01/2007
Prod Implemented	02/01/2007

3.12.63 REL2-New Index on T_RE_EDB - 6075

Identifier	Type	Level	Subsystem	Computed	Estimated	Priority
6075	Change Order		Buy-In Data Maintenance			2

3.12.63.1 Desired Solution
There is a need to add a non-unique index on column NUM_SEQ of table T_RE_EDB.

3.12.63.2 Business Impact
None.

3.12.63.3 Technical Specifications
Add new index X_RE_EDB_6 which consists of the following column:

- NUM_SEQ

This index is non-unique.

3.12.63.4 Clarifications
No associated clarifications found.

3.12.63.5 Associated Requirements

Requirement ID	Type
No associated Requirements found.	

3.12.63.6 Associated System Objects

Technical Name	Object Type	Title
No associated Change Orders found.		

3.12.63.7 Change Order Status

Status	Date
Issue Identified	01/26/2007
Ready for DM Review	01/27/2007
UAT Implemented	04/27/2007
Prod Implemented	06/14/2007

3.12.64 Process EDB File from HMS - 6872

Identifier	Type	Level	Subsystem	Computed	Estimated	Priority
6872	Change Order		Buy-In Data Maintenance			3

3.12.64.1 Desired Solution

Previously, the EDB file was designed and developed to be received from CMS (reference CO226).

The Commonwealth desires the file from CMS to be routed to HMS. HMS adds their data to the file. To differentiate HMS data from CMS data, a HMS tag is added to the data put into the MISC_DATA field. CMS data begins with CMS tag.

The requirements for the proposed routing and processing are noted below and in the Technical Specifications:

- The file structure of the EDB file received by interChange is not modified by HMS in any manner during HMS processing and the EDB file sent to interChange must match the file layout in the KY DDI Project Workbook (CMS EDB Layout); and,
- HMS needs to actively participate in testing by providing test files. The test files need to be in the same format as the original CMS response data, contain the original CMS response data and include HMS data records. The concatenated HMS records must match the original CMS file format.

No changes to reports or panels are made.

3.12.64.2 Business Impact

None.

3.12.64.3 Technical Specifications

- The records and associated data in the EDB file received from CMS are not modified in any manner, but HMS may concatenate records to the end of the file, as long as the record format matches the format of the EDB file. Any concatenated records added by HMS must have the "STATE-MISC-DATA" field (position 67) populated with data that begins with HMS to indicate the record was created by HMS;
- The file from HMS to interChange must be named buym_edbreturn_yyyymmdd_hhmmss.dat. This file must be zipped, without folder/directory paths embedded, and the name of the zipped EDB file sent to interChange must be buym_edbreturn_yyyymmdd_hhmmss.zip;3; and,
- HMS sends this file to the interChange via the EDS Orlando Data Center FTP Server (192.57.202.35) using the HMS userid and password. It must be sent in a time sensitive manner, such that, after ODC routing, it is received by interChange not later than 5 p.m. on the 20th of each month.

3.12.64.4 Clarifications

A meeting was held 1/18/07 with EDS, HMS and Commonwealth personnel to discuss the routing of the EDB file from CMS to HMS, then interChange:

Participants were:

EDS - Howard Warren, Steve Russell and Bill Ponder

HMS - Chris Sallee and Josh Bradley

CW - Cliff Robey, Sandeep Kapoor

The incorporation of the Medicare Entitlement File from HMS into the CMS response file was discussed.

1. Howard asked Josh to create a HMS-specific prefix in the MISC_DATA field to differentiate HMS-generated records from CMS generated records.

2. Josh is working towards providing the test file early next week.

3. The pathway for the EDB Response File is:

--------CMS to KY mainframe to HMS to interChange

This new process was to be dependent upon Commonwealth approval of Howard Warren's proposed design, which was delivered via email Jan 18 and again Feb 12, 2007. Cliff Robey sought approval from DMS leadership, but EDS was never notified to proceed with developing COs to support receiving the CMS file from HMS with the HMS data additions (see email under Supplemental documentation).

This CO is to document the design proposed by Howard Jan 18, 2007 and has been put in SCB status for review.

In a meeting today with Ricky Pope, Dean Taunton and Sandeep Kapoor, a routing methodology and process was proposed concerning the routing of the EDB response file received from CMS. Currently, as designed and developed, the EDB response received from CMS is loaded directly into interChange. The proposed methodology and processing of the EDB file has the file from CMS routing to HMS first for their processing and then HMS routes the EDB file to interChange. The proposed methodology and process is attached under Supplemental documentation as "EDB File Routing Through HMS".

This solution has been approved by the Commonwealth. Please reference the email below.

Format of the MISC-DATA field created by iC for transmittion to CMS is as follows:

- First three characters are "CMS";
- Next four characters are the MMDD of the creation date; and,
- Last six positions are a sequential number from 1-999999. Number is to be 0-filled.

3.12.64.5 Associated Requirements

Requirement ID	Type
30.090.001.004.6	Interfaces - Incoming

3.12.64.6 Associated System Objects

Technical Name	Object Type	Title
elgpm153	Program	EDB Extract file

3.12.64.7 Change Order Status

Status	Date
SCB	03/26/2007
Construction in Progress	04/11/2007
Ready for Model Office	04/11/2007
Model Office Implemented	04/12/2007
UAT Implemented	04/12/2007
Prod Implemented	04/12/2007

3.12.65 Modify EDB Reports for HMS data - 6873

Identifier	Type	Level	Subsystem	Computed	Estimated	Priority
6873	Change Order		Buy-In Data Maintenance			3

3.12.65.1 Desired Solution
There is a need to add the MISC_DATA field to the reports produced by the buypm523 program.

The Commonwealth desires the file from CMS to be routed to HMS. HMS adds their data to the file and then sends to interChange. To differentiate HMS data from CMS data, a HMS tag has been added to the data put into the MISC_DATA field. CMS data begins with CMS tag. The report needs to be changed to accommodate the CMS and HMS tagged data and print it on the report. A new column MISC DATA needs to be added to do this.

3.12.65.2 Business Impact
None.

3.12.65.3 Technical Specifications
Modify program buypm523 to include the t_re_edb.num_seq field.

3.12.65.4 Clarifications
A meeting was held 1/18/07 with EDS, HMS and Commonwealth personnel to discuss the routing of the EDB file from CMS to HMS, then interChange:

Participants were:

EDS - Howard Warren, Steve Russell and Bill Ponder

HMS - Chris Sallee and Josh Bradley

CW - Cliff Robey, Sandeep Kapoor

The incorporation of the Medicare Entitlement File from HMS into the CMS response file was discussed.

1. Howard asked Josh to create a HMS-specific prefix in the MISC_DATA field to differentiate HMS-generated records from CMS generated records.

2. Josh is working towards providing the test file early next week.

3. The pathway for the EDB Response File is:

--------CMS to KY mainframe to HMS to interChange

This new process was to be dependent upon Commonwealth approval of Howard Warren's proposed design, which was delivered via email Jan 18 and again Feb 12, 2007. Cliff Robey sought approval from DMS leadership, but EDS was never notified to proceed with developing COs to support receiving the CMS file from HMS with the HMS data additions (see email under Supplemental documentation).

This CO is to document the design proposed by Howard Jan 18, 2007 and has been put in SCB status for review.

Report layout changes have been approved, see email below. Original CO for reports was 1464.

This solution has been approved by the Commonwealth. Please reference the email below.

3.12.65.5 Associated Requirements

Requirement ID	Type
30.090.001.004.6	Interfaces - Incoming

3.12.65.6 Associated System Objects

Technical Name	Object Type	Title
buypm523	Program	EDB Entitlement Processing Reports

3.12.65.7 Change Order Status

Status	Date
SCB	03/26/2007
Ready for Model Office	04/05/2007
Model Office Implemented	04/05/2007
UAT Implemented	04/05/2007
Prod Implemented	04/05/2007

3.12.66 Modify EDB Panel to indicate HMS - 6874

Identifier	Type	Level	Subsystem	Computed	Estimated	Priority
6874	Change Order		Buy-In Data Maintenance			3

3.12.66.1 Desired Solution
There is a need to modify the EDB Search results panel to include the t_re_edb.num_seq column.

The Commonwealth desires the file from CMS to be routed to HMS. HMS adds their data to the file and then send to interChange. To differentiate HMS data from CMS data, a HMS tag has been added to the data put into the MISC_DATA field of the file. CMS data begins with CMS tag. The panel needs to be changed to accommodate the CMS and HMS tagged data and display it on the panel.

3.12.66.2 Business Impact
None.

3.12.66.3 Technical Specifications
Modify the EDB Search Results to include the t_re_edb.num_seq column.

3.12.66.4 Clarifications
A meeting was held 1/18/07 with EDS, HMS and Commonwealth personnel to discuss the routing of the EDB file from CMS to HMS, then interChange:

Participants were:

EDS - Howard Warren, Steve Russell and Bill Ponder

HMS - Chris Sallee and Josh Bradley

CW - Cliff Robey, Sandeep Kapoor

The incorporation of the Medicare Entitlement File from HMS into the CMS response file was discussed.

1. Howard asked Josh to create a HMS-specific prefix in the MISC_DATA field to differentiate HMS-generated records from CMS generated records.

2. Josh is working towards providing the test file early next week.

3. The pathway for the EDB Response File is:

--------CMS to KY mainframe to HMS to interChange

This new process was to be dependent upon Commonwealth approval of Howard Warren's proposed design, which was delivered via email Jan 18 and again Feb 12, 2007. Cliff Robey sought approval from DMS leadership, but EDS was never notified to proceed with developing COs to support receiving the CMS file from HMS with the HMS data additions (see email under Supplemental documentation).

This CO is to document the design proposed by Howard Jan 18, 2007 and has been put in SCB status for review.

This solution has been approved by the Commonwealth. Please reference the email below.

3.12.66.5 Associated Requirements

Requirement ID	Type
30.090.001.004.6	Interfaces - Incoming

3.12.66.6 Associated System Objects

Technical Name	Object Type	Title
BuyInEDBSearch	Panel	Buy-In EDB Search

3.12.66.7 Change Order Status

Status	Date
SCB	03/26/2007
SE Assigned	04/10/2007
Construction in Progress	04/10/2007
Ready for Construction Walkthrough	04/10/2007
Ready for Model Office	04/10/2007
Model Office Implemented	04/13/2007
UAT Implemented	04/13/2007
Model Office Implemented	04/13/2007
UAT Implemented	04/13/2007
Prod Implemented	06/14/2007

3.12.67 Modify MMA History Panel - 7321

Identifier	Type	Level	Subsystem	Computed	Estimated	Priority
7321	Change Order		Buy-In Data Maintenance			3

3.12.67.1 Desired Solution
There is a need to modify the MMA History panel to usability.

3.12.67.2 Business Impact
None.

3.12.67.3 Technical Specifications
The existing MMA history panel is difficult to use since the screen uses scrollbars to move left and right. A newer panel replaces the older one. This panel has the following three sections:

- A summary list of the transactions sent to CMS;
- A detail area of the transaction sent to CMS; and,
- A detail area of the response received from CMS.

When the panel is first started, the list is populated by a union of transactions received and sent. The union is sorted by reverse chronological order. The tables are T_RE_CMS_MMA_ENROLL and T_RE_CMS_MMA_RESPONSE. They are joined by the combination of sak_recip+sak_short.

When a row in the list is selected, the detailed panels below are populated from the tables.

3.12.67.4 Clarifications
Clarification:

In the new mockup, the list column "TYPE" is populated from T_RE_CMS_MMA_ENROLL.CDE_REC_TYPE based on the following:

- If cde_rec_type = "D", then list displays "DET"; and,
- If cde_rec_type = "P", then list displays "PRO".

The Clawback Amount is only shown in the list area on the new mockup. It is also displayed below Medicare D.

3.12.67.5 Associated Requirements

Requirement ID	Type
No associated Requirements found.	

3.12.67.6 Associated System Objects

Technical Name	Object Type	Title
No associated Change Orders found.		

3.12.67.7 Change Order Status

Status	Date

Status	Date
Deferred	04/11/2007
SE Assigned	04/24/2007
Construction in Progress	04/27/2007
Ready for Model Office	05/02/2007
Ready for Model Office	05/09/2007
Model Office Implemented	05/10/2007
UAT Implemented	05/10/2007
Prod Implemented	05/10/2007

3.12.68 Revise Part D Dual Status Code - 7689

Identifier	Type	Level	Subsystem	Computed	Estimated	Priority
7689	Change Order		Buy-In Data Maintenance			3

3.12.68.1 Desired Solution
There is a need to revise MMA/Part D Dual Status Code determination.

3.12.68.2 Business Impact
None.

3.12.68.3 Technical Specifications
Background During UAT testing, it was determined that the documentation left by the legacy Part D developer was incorrect. The method currently used to assign the Dual Status Code in Part D enrollment does not work correctly and assigns an incorrect co-pay amount. interChange was coded to match the documentation, and contains this flaw.

The net effect of this issue is that CMS assigns a lower co-pay amount to the Part D beneficiary. However, the Commonwealth is not charged a higher amount. Therefore this flaw does not cost the Commonwealth or the beneficiary any money. It can be corrected after go-live.

Proposed Solution The basic Part D enrollment process is to select all dual eligible members (Medicaid members with active Part A and/or Part B entitlement). The dual status ia determined as follows:

DUAL STATUS	DESCRIPTION
1	Member has active QMB only
2	Member has active QMB plus an active non-QMB, non-SLMB program
3	Member has active SLMB only
4	Member has active SLMB plus an active non-QMB, non-SLMB program
5	Member has active QDWI
6	Member has active QI1
8	All other members with active dual entitlement/eligibility

There is a special circumstance where members with QMB, SLMB or QI1 but without Part A or Part B entitlement are included. The assumption is that by being in one of these plans, the member is in Medicare; therefore Part D enrollment is attempted. Dual status code is calculated using the table above.

The function determineDualStatusCode() within code module buypmMMAState.sc is changed to accomplish the solution above and the programs buypmMMAEnroll, buypmMMARetro and buypmMMARecon recompiled to incorporate the changes.

3.12.68.4 Clarifications

No associated clarifications found.

3.12.68.5 Associated Requirements

Requirement ID	Type
30.090.001.002.N01	Interfaces - Incoming

3.12.68.6 Associated System Objects

Technical Name	Object Type	Title
buypmMMAEnroll	Program	Part D Current Month Enrollments
buypmMMARetro	Program	Part D Retroactive Enrollments
buypmMMARecon	Program	Part D Retroactive Changes to Enrollments

3.12.68.7 Change Order Status

Status	Date
Deferred	04/27/2007
Ready for Construction Walkthrough	06/27/2007
Ready for Model Office	06/29/2007
Model Office Implemented	07/02/2007
UAT Implemented	07/02/2007
Prod Implemented	07/05/2007

3.12.69 Update Clawback Amts - 8213

Identifier	Type	Level	Subsystem	Computed	Estimated	Priority
8213	Change Order		Buy-In Data Maintenance			2

3.12.69.1 Desired Solution
There is a need to update clawback amounts in the past to the correct values.

3.12.69.2 Business Impact
None.

3.12.69.3 Technical Specifications
The Commonwealth's clawback amount assessed by CMS has changed twice since late 2006. The legacy system created change order 1425 to update these amounts, but it was never completed.

A SQL script has been written for a one-time application. The T_RE_CLAWBACK table is updated as follows:

- Use sak_recip+sak_short to link T_RE_CLAWBACK to T_RE_CMS_MMA_ENROLL;
- If T_RE_CMS_MMA_ENROLL.MTH_BENEFIT is between 10/2006 and 12/2006, the T_RE_CLAWBACK.AMT_CLAWBACK is updated to $69.47; and,
- If T_RE_CMS_MMA_ENROLL.MTH_BENEFIT is after 12/2006, the T_RE_CLAWBACK.AMT_CLAWBACK is updated to $72.86.

3.12.69.4 Clarifications
This CO was created for tracking to the legacy DCR/CO 1425. The SQL solution was actually executed by Conversion team on the night of 6/6/2007 as part of Conversion Log 1427.

This CO is not "officially" promoted.

3.12.69.5 Associated Requirements

Requirement ID	Type
No associated Requirements found.	

3.12.69.6 Associated System Objects

Technical Name	Object Type	Title
No associated Change Orders found.		

3.12.69.7 Change Order Status

Status	Date
Change Order Written	06/05/2007
Prod Implemented	06/07/2007

3.12.70 I3429 - 8530

Identifier	Type	Level	Subsystem	Computed	Estimated	Priority
8530	Change Order		Buy-In Data Maintenance			1

3.12.70.1 Desired Solution
Create legacy reports KYMC7560-R001 and KYMC7560-R002 in interChange.

3.12.70.2 Business Impact
None.

3.12.70.3 Technical Specifications
None.

3.12.70.4 Clarifications
Meeting was held on 7/24/07 to discuss specifications with DMS and SE. Kelli O'Brien was asked for an extension on 7/27/07 via email.

no upate

Sent QI1 report for Kelli to review on 08/03/2007. Kelli responded back on 08/06/2007 with question. Kartheg responded back by email with answer.

Sent email to Kelli with explanation why the counts are lower on the last report sent.

Forward new report for QI1 for Kelli to review.

Sent email to Kelli this morning to review new report for testing.

Sent email to Kelli

3.12.70.5 Associated Requirements

Requirement ID	Type
No associated Requirements found.	

3.12.70.6 Associated System Objects

Technical Name	Object Type	Title
No associated Change Orders found.		

3.12.70.7 Change Order Status

Status	Date
Change Order Written	06/28/2007
Assigned BA	06/28/2007
Assigned SE	06/28/2007
Assigned SE	06/28/2007
Unit Test in Progress	08/20/2007

Status	Date
(obsolete)	

3.12.71 Part D - Add code 99 - 8773

Identifier	Type	Level	Subsystem	Computed	Estimated	Priority
8773	Change Order		Buy-In Data Maintenance			3

3.12.71.1 Desired Solution
There is a need to support Dual Status Code type "99".

3.12.71.2 Business Impact
None.

3.12.71.3 Technical Specifications
In discussions with CMS (see emails in Supplemental Documentation), it was discovered the disenrollment transactions sent by the Commonwealth's legacy system did not use dual status code of "99". Based on documentation provided by the legacy programmer, interChange was coded to the same restriction of not sending "99" transactions; however, interChange uses them to send disenrollments. The result is that no disenrollment transactions are being sent to CMS from within interChange.

It is necessary to support the "99" dual status code in order to retroactively disenroll Part D coverage. This is approached in the following fashion: program buypmMMARetro is modified to create a dual status code of "99" and an Eligibility Status of "N", if a member with Part D in the past has the Medicaid eligibility retroactively terminated.

Example:

We have a member, "John Smith". Smith has Medicaid eligibility from 6/2007 through 22991231.

In the June Part D enrollment file, we enroll Smith. CMS approves.

On July 5, we realize Smith does not really have eligibility, so the Medicaid eligibility is retroactively terminated.

In the July Part D enrollment file, we send a disenrollment transaction for Smith. The month-benefit would be 06-2007, the dual status code would be "99", the Eligibility Indicator would be "N". We do not send a record for 07-2007.

3.12.71.4 Clarifications
Steve Russell - Kelli O'Brien reviewed and approved the CO design. See email under Supplemental Documentation.

This was worked in parallel with defect 8968. Please refer to that defect for all testing materials.

3.12.71.5 Associated Requirements

Requirement ID	Type
No associated Requirements found.	

3.12.71.6 Associated System Objects

Technical Name	Object Type	Title
No associated Change Orders found.		

3.12.71.7 Change Order Status

Status	Date
Issue Identified	07/18/2007
Ready for Model Office	08/24/2007

3.12.72 Add Legacy edits to EDB input - 8777

Identifier	Type	Level	Subsystem	Computed	Estimated	Priority
8777	Change Order		Buy-In Data Maintenance			2

3.12.72.1 Desired Solution
Currently, the processing of the EDB from CMS only looks at the validates against the SSN. It is desired to have the processing of the EDB input file to validate against additional member demographic data being returned on the file to ensure the member returned matches the member on file in interChange for Buy-In.

3.12.72.2 Business Impact
It is possible for CMS to return member data that does not match the member in interChange. This is especially true if a member was erroneously given the SSN of someone else when added to interChange (either by panels or KAMES/SDX feed).

Editing for this possibility of mismatched member data prevents assigning Medicare benefits to the wrong person in interChange.

3.12.72.3 Technical Specifications
The technical specifications are to match the edits performed in Legacy. Jeff Bortell supplies and document those below.

3.12.72.4 Clarifications
No associated clarifications found.

3.12.72.5 Associated Requirements

Requirement ID	Type
No associated Requirements found.	

3.12.72.6 Associated System Objects

Technical Name	Object Type	Title
No associated Change Orders found.		

3.12.72.7 Change Order Status

Status	Date
Change Order Written	07/18/2007

3.12.73 I3482 - 8974

Identifier	Type	Level	Subsystem	Computed	Estimated	Priority
8974	Change Order		Buy-In Data Maintenance			1

3.12.73.1 Desired Solution
Enable DMS staff to be able to create Part D records to submit to CMS

3.12.73.2 Business Impact
None.

3.12.73.3 Technical Specifications
None.

3.12.73.4 Clarifications
Interchange needs to include a panel that allows DMS staff to manually enter Part D MMA records. The records need to be included on the monthly file submitted to CMS. Currently, staff cannot intervene on a member's behalf and insure that a record is sent - this is causing undue hardship on members.

The Part D entitlement panel and link needs to be "hidden" from interChange users.

The MMA History link title needs to be changed to Part D.

3.12.73.5 Associated Requirements

Requirement ID	Type
No associated Requirements found.	

3.12.73.6 Associated System Objects

Technical Name	Object Type	Title
No associated Change Orders found.		

3.12.73.7 Change Order Status

Status	Date
Change Order Written	08/16/2007
Assigned BA	08/16/2007
SE Assigned	08/20/2007
Ready for DM Review	08/23/2007

3.12.74 Fulll EDB finder file - 9036

Identifier	Type	Level	Subsystem	Computed	Estimated	Priority
9036	Change Order		Buy-In Data Maintenance			

3.12.74.1 Desired Solution
CMS requires a full edb finder file sent quarterly basis.

A full edb finder file is required on the coming monthly cycle - Sept 10th.

3.12.74.2 Business Impact
None.

3.12.74.3 Technical Specifications
Create a new Unix Job that runs the full edb finder file. Use ELGJM153 as the model. The new job needs to pass a parameter value to the program to indicate it's a full file.

Create a new AutoSys box and job to run quarterly. Use the existing monthly box/ job below as the model.

PMONTHLY_BUYIN_EDBS
PBUY_EDBSEND
ELGPM153

Run date of the quarterly job.

This box / job needs to run as an ad-hoc for Sept 10th 2007.

3.12.74.4 Clarifications
No associated clarifications found.

3.12.74.5 Associated Requirements

Requirement ID	Type
No associated Requirements found.	

3.12.74.6 Associated System Objects

Technical Name	Object Type	Title
No associated Change Orders found.		

3.12.74.7 Change Order Status

Status	Date
Change Order Written	08/23/2007

3.13 Data Element Dictionary

Because of the length of some column names and the use of underscore characters, some names in the tables below may wrap to the next line.

3.13.1 T_BUYA_BILL

Contains the buy-in Part A transactions from the billing file, which correspond to valid Medicaid beneficiaries in the beneficiary database.

Column Name	Description	Type	Length	Precision	Primary Key
SAK_RECIP	The system assigned internal key for a unique recipient.	NUMBER	9	0	Y
SAK_BUYIN	The system assigned key to uniquely identify all of the member's buy-in Part A transactions. This column functions as a sak_short for the sak_recip.	NUMBER	4	0	Y
DTE_BUY_PROC	Date the buy-in Part A billing file processed that contained this transaction.	NUMBER	8	0	N
ID_MEDICARE	Current Medicare ID for the beneficiary.	CHAR	12	0	N
IND_REDUCED	The presence of a "1" in this field means that the reduced Part A premium rate applies, otherwise it is blank.	CHAR	1	0	N
IND_SURCHARGE	The presence of a "1" in this field means that the Part A premium includes a 10% surcharge for late enrollment, otherwise it is blank.	CHAR	1	0	N
MISC_CDE_DTE	In most situations, this field is blank. However, if the CDE_BUY_TXN field is "21" (and CDE_BUY_SUB is "B"), "22", "25", or "29", a date is present (MMYY). If the CDE_BUY_TXN field is "28", an agency code is present and the fourth position is blank.	CHAR	8	0	N
DTE_BILLING	A numeric field which designates the billing date sent on the CMS file.	NUMBER	8	0	N

Column Name	Description	Type	Length	Precision	Primary Key
CDE_BUY_TXN	First two positions of a four position numeric code, the buy-in transaction code identifies the type of record conveyed by the transaction.	CHAR	2	0	N
CDE_BUY_MODI	Last two positions of a four position numeric code, the buy-in transaction code modifier provides the rationale for the action. Could be spaces.	CHAR	2	0	N
CDE_BUY_SUB	One position alphabetic sub-code, the buy-in sub-code further enchances the rationale for the action. Could be spaces.	CHAR	1	0	N
DTE_EFFECTIVE	The effective date of the transaction.	NUMBER	8	0	N
AMT_PREMIUM	Premium amount on the transaction. On an accretion acknowledgment record, this field reflects a debit for the amount the State owes. On a deletion acknowledgment record, this field reflects a credit for the amount due to the State.	NUMBER	8	2	N
IND_MORE_BUYIN	Indicates whether there is more buy-in billing information kept on file because of a mismatch between CMS and the State MMIS.	CHAR	1	0	N
IND_ERROR	Indicates whether the transaction applied to the wrong beneficiary.	CHAR	1	0	N
DTE_STOP	Stop date from CMS	NUMBER	8	0	N
CDE_AGENCY	Agency code received from CMS	CHAR	3	0	N
AMT_PREM_RATE	Premium rate per period	NUMBER	8	2	N
IND_CREDIT	Credit/debit indicator	CHAR	1	0	N
ID_MEDICARE_NEW	New medicare claim number sent from CMS	CHAR	12	0	N

Column Name	Description	Type	Length	Precision	Primary Key
DTE_REPLY	Reply date to CMS	NUMBER	8	0	N
CDE_RIC	Record ID code received from CMS	CHAR	1	0	N

3.13.2 T_BUYA_BILL_INFO

Contains more information on the buy-in Part A transactions from the billing file, which correspond to valid Medicaid beneficiaries in the beneficiary database.

Column Name	Description	Type	Length	Precision	Primary Key
SAK_RECIP	The system assigned internal key for a unique recipient.	NUMBER	9	0	Y
SAK_BUYIN	The system assigned key to uniquely identify all of the member's buy-in Part A transactions. This column functions as a sak_short for the sak_recip.	NUMBER	4	0	Y
NAM_LAST	The last name of a beneficiary, according to CMS.	CHAR	24	0	N
NAM_FIRST	The first name of a beneficiary, according to CMS.	CHAR	15	0	N
NAM_MID_INIT	The middle initial of the beneficiary, according to CMS.	CHAR	1	0	N
CDE_SEX	A numeric code indicating the sex of the beneficiary, according to CMS (male "1", female "2", or unknown "3").	CHAR	1	0	N
DTE_BIRTH	The date of birth for the beneficiary, according to CMS.	NUMBER	8	0	N
ID_MEDICAID	Unique identifier for the beneficiary, according to CMS.	CHAR	12	0	N
CDE_COUNTY	County code received from CMS	VARCHAR2	10	0	N
NUM_SSN	SSN received from CMS	CHAR	9	0	N
DTE_TO_CMS	Date response was sent to CMS	NUMBER	8	0	N
DTE_BUY_PROC	Date processed by batch system	NUMBER	8	0	N

3.13.3 T_BUYA_DEMO_CHANGE

This table contains demographic data changes received from CMS through the Part A Billing File, 'E' record type. interChange does not apply these changes to member information unless requested by a customer, instead they are stored for historical purposes.

Column Name	Description	Type	Length	Precision	Primary Key
SAK_BUY_DEMO_A	System assigned key	NUMBER	9	0	Y
SAK_RECIP	The system assigned internal key for a unique recipient.	NUMBER	9	0	N
ID_MEDICARE	Member Medicare number	CHAR	12	0	N
NAM_LAST	Member last name	CHAR	24	0	N
NAM_FIRST	Member first name	CHAR	15	0	N
NAM_MID_INIT	Member middle initial	CHAR	1	0	N
CDE_SEX	Sex code	CHAR	1	0	N
DTE_BIRTH	Member DOB	NUMBER	8	0	N
NUM_SSN	Member SSN	CHAR	9	0	N
CDE_AGENCY	Agency code received from CMS	CHAR	3	0	N
NAM_LAST_EDB	Last name on EDB records	CHAR	24	0	N
NAM_FIRST_EDB	First name on EDB records	CHAR	15	0	N
NAM_MID_INIT_EDB	Middle initial on EDB records	CHAR	1	0	N
CDE_SEX_EDB	Sex on EDB records	CHAR	1	0	N
DTE_BIRTH_EDB	DOB on EDB records	NUMBER	8	0	N
NUM_AGENCY_CLIENT_ID	Agency Client ID number	CHAR	20	0	N
DTE_BUY_PROC	Date processed in batch	NUMBER	8	0	N
NUM_SSN_EDB	SSN on EDB records	CHAR	9	0	N
CDE_RIC	Record ID code received from CM	CHAR	1	0	N

3.13.4 T_BUYA_ERROR

This table stores records from CMS that have failed basic validation and cannot be linked to a member

Column Name	Description	Type	Length	Precision	Primary Key
SAK_BUYA_ERROR	System assigned key	NUMBER	9	0	Y
DTE_BUY_PROC	Date processed by Buy-In receiving system	NUMBER	8	0	N
DSC_COMPLETE_TXN	Original transaction received from CMS.	VARCHAR2	500	0	N

3.13.5 T_BUYA_EXCEPT

Contains the buy-in Part A transactions for the premium file, whose corresponding transactions from the billing file do not match any beneficiary in the beneficiary database.

Column Name	Description	Type	Length	Precision	Primary Key
SAK_BUYA_EXCEPT	The system assigned key to identify the exception buy-in Part A transactions.	NUMBER	9	0	Y
DTE_BUY_PROC	Date of creation for this transaction.	NUMBER	8	0	N
ID_MEDICARE	Current Medicare ID for the beneficiary, according to CMS.	CHAR	12	0	N
NAM_LAST	The last name of a beneficiary, according to CMS.	CHAR	24	0	N
NAM_FIRST	The first name of a beneficiary, according to CMS.	CHAR	15	0	N
NAM_MID_INIT	The middle initial of the beneficiary, according to CMS.	CHAR	1	0	N
CDE_SEX	A numeric code indicating the sex of the beneficiary, according to CMS (male "1", female "2", or unknown "3").	CHAR	1	0	N
DTE_BIRTH	The date of birth for the beneficiary, according to CMS.	NUMBER	8	0	N
CDE_BUY_TXN	First two positions of a four position numeric code, the buy-in transaction code identifies the type of record conveyed by the transaction. When a response appears on the billing file, this code becomes the buy-in transaction code modifier.	CHAR	2	0	N
DTE_EFFECTIVE	Effective date for the transaction.	NUMBER	8	0	N

Column Name	Description	Type	Length	Precision	Primary Key
ID_MEDICAID	Unique identifier for the beneficiary, according to CMS.	CHAR	12	0	N
DTE_TO_CMS	Date already or to be sent to CMS.	NUMBER	8	0	N
CDE_AGENCY	Agency code as provided by CMS.	CHAR	3	0	N
NUM_SSN	SSN as provided by CMS.	CHAR	9	0	N
CDE_RIC	Record ID code from CMS.	CHAR	1	0	N
DTE_STOP	Eligibility termination date as provided by CMS.	NUMBER	8	0	N
SAK_BUYA_MISMATCH	The system assigned key to identify the mismatched buy-in Part A transactions.	NUMBER	9	0	N

3.13.6 T_BUYA_MISMATCH

Contains the buy-in Part A transactions from the billing file, which either have a different BID No or have both a different current Medicare ID and Date of Birth in the beneficiary database.

Column Name	Description	Type	Length	Precision	Primary Key
SAK_BUYA_MISMATCH	The system assigned key to identify the mismatched buy-in Part A transactions.	NUMBER	9	0	Y
DTE_BUY_PROC	Date the buy-in Part A billing file processed that contained this transaction.	NUMBER	8	0	N
ID_MEDICARE	Current Medicare ID for the beneficiary, according to CMS.	CHAR	12	0	N
NAM_LAST	The last name of a beneficiary, according to CMS.	CHAR	24	0	N
NAM_FIRST	The first name of a beneficiary, according to CMS.	CHAR	15	0	N
NAM_MID_INIT	The middle initial of the beneficiary, according to CMS.	CHAR	1	0	N
CDE_SEX	A numeric code indicating the sex of the beneficiary, according to CMS (male "1", female "2", or unknown "3").	CHAR	1	0	N
DTE_BIRTH	The date of birth for the beneficiary, according to CMS.	NUMBER	8	0	N
ID_MEDICARE_NEW	New Medicare ID for the beneficiary, according to CMS. Could be spaces.	CHAR	12	0	N

Column Name	Description	Type	Length	Precision	Primary Key
IND_REDUCED	The presence of a "1" in this field means that the reduced Part A premium rate applies, otherwise it is blank.	CHAR	1	0	N
CDE_BUY_AGENCY	A three position alphanumeric code assigned to the last entity (State) which had jurisdiction over the (beneficiary's) account.	CHAR	3	0	N
IND_SURCHARGE	The presence of a "1" in this field means that the Part A premium includes a 10% surcharge for late enrollment, otherwise it is blank.	CHAR	1	0	N
MISC_CDE_DTE	In most situations, this field is blank. However, if the CDE_BUY_TXN field is "21" (and CDE_BUY_SUB is "B"), "22", "25", or "29", a date is present (MMYY). If the CDE_BUY_TXN field is "28", an agency code is present and the fourth position is blank.	CHAR	8	0	N

Column Name	Description	Type	Length	Precision	Primary Key
DTE_BILLING	A four position numeric field which designates the billing file on which the transaction appears. The billing date is 2 months after the current update month.	NUMBER	8	0	N
CDE_BUY_TXN	First two positions of a four position numeric code, the buy-in transaction code identifies the type of record conveyed by the transaction.	CHAR	2	0	N
CDE_BUY_MODI	Last two positions of a four position numeric code, the buy-in transaction code modifier provides the rationale for the action. Could be spaces.	CHAR	2	0	N
CDE_BUY_SUB	One position alphabetic sub-code, the buy-in sub-code further enchances the rationale for the action. Could be spaces.	CHAR	1	0	N
DTE_EFFECTIVE	Effective date for the transaction.	NUMBER	8	0	N
ID_MEDICAID	Unique identifier for the beneficiary, according to CMS.	CHAR	12	0	N
NUM_SSN	SSN as received from CMS	CHAR	9	0	N
CDE_RIC	Record ID received from CMS	CHAR	1	0	N

Column Name	Description	Type	Length	Precision	Primary Key
DTE_STOP	End date received from CMS	NUMBER	8	0	N
ADR_ZIP_CODE	Zip code received from CMS	CHAR	9	0	N
CDE_COUNTY	County code received from CMS	VARCHAR2	10	0	N
AMT_PREM_RATE	Monthly premium from CMS	NUMBER	8	2	N
IND_CREDIT	Credit/debit indicator from CMS	CHAR	1	0	N
AMT_REDUCED_PREM_RATE	Reduced premium rate from CMS	NUMBER	8	2	N
DTE_REPLY	Date reply transmitted to CMS	NUMBER	8	0	N
DTE_ADDITIONAL	Effective date from CMS	NUMBER	8	0	N
SAK_BUYA_EXCEPT	The system assigned key to identify the exception buy-in Part A transactions.	NUMBER	9	0	N
IND_LINKED	Was this row manually linked?	CHAR	1	0	N
AMT_DUE_OR_REFUND	Amount due or refunded	NUMBER	8	2	N

3.13.7 T_BUYA_PERD

Contains the buy-in Part A coverage periods and the total premium paid for the period.

Column Name	Description	Type	Length	Precision	Primary Key
SAK_RECIP	The system assigned internal key for a unique recipient.	NUMBER	9	0	Y
SAK_BUYIN	The system assigned key to uniquely identify all of the member's Buyin Part A coverage periods. This column functions as a sak_short for the sak_recip.	NUMBER	4	0	Y
AMT_PREM_PRD	Total amount of Part A premium paid for the buy-in coverage period.	NUMBER	8	2	N
DTE_EFFECTIVE	Effective date for the Part A buy-in premium.	NUMBER	8	0	N
DTE_END	End date for the Part A buy-in premium.	NUMBER	8	0	N

3.13.8 T_BUYA_PREM

Contains both pending and historical buy-in Part A transactions from the sending file.

Column Name	Description	Type	Length	Precision	Primary Key
SAK_RECIP	The system assigned internal key for a unique recipient.	NUMBER	9	0	Y
SAK_BUYIN	The system assigned key to uniquely identify all of the member's buy-in Part A transactions. This column functions as a sak_short for the sak_recip.	NUMBER	4	0	Y
DTE_BUY_PROC	Date of creation for this transaction.	NUMBER	8	0	N
ID_MEDICARE	Current Medicare ID for the beneficiary.	CHAR	12	0	N
CDE_BUY_TXN	First two positions of a four position numeric code, the buy-in transaction code identifies the type of record conveyed by the transaction. When a response appears on the billing file, this code becomes the buy-in transaction code modifier.	CHAR	2	0	N
DTE_EFFECTIVE	Effective date for the transaction.	NUMBER	8	0	N

Column Name	Description	Type	Length	Precision	Primary Key
IND_SOURCE	This is the source of the transaction ('A' = automatic batch process, 'M' = manual creation or modification).	CHAR	1	0	N
DTE_TO_CMS	Date already or to be sent to CMS.	NUMBER	8	0	N
DTE_75_STOP	Stop date transmitted to CMS.	NUMBER	8	0	N
CDE_AGENCY	Agency code transmitted to CMS.	CHAR	3	0	N
ID_MEDICAID	Medicaid ID transmitted to CMS.	CHAR	12	0	N
CDE_RIC	Record ID code that generated this premium entry.	CHAR	1	0	N
IND_SHIPPED	Sent to CMS	CHAR	1	0	N

3.13.9 T_BUYB_BILL

Contains the buy-in Part B transactions from the billing file which correspond to valid Medicaid beneficiaries in the beneficiary database.

Column Name	Description	Type	Length	Precision	Primary Key
SAK_RECIP	The system assigned internal key for a unique recipient.	NUMBER	9	0	Y
SAK_BUYIN	The system assigned key to uniquely identify all of the recpient's buy-in Part B transactions. This column functions as a sak_short for the sak_recip.	NUMBER	4	0	Y
DTE_BUY_PROC	Date the buy-in Part B billing file processed that contained this transaction.	NUMBER	8	0	N
ID_MEDICARE	Current Medicare ID for the beneficiary.	CHAR	12	0	N

Column Name	Description	Type	Length	Precision	Primary Key
CDE_BUY_LIV_ARNG	A one position alphabetic code of "D" which indicates that the beneficiary is a resident of a Title XIX Institution. Could be spaces. A Title XIX Institution Includes eligible persons who live in a public or private medical institution throughout a month and Medicaid is paying more than 50% of the cost of their care; and eligible children under age 18, who live in a public or private medical treatment facility throughout a month and Medicaid, or a combination of Medicaid and private insurance is paying more than 50 percent of the cost of care.	CHAR	1	0	N
CDE_BUY_SSI	One-position alphabetic code that describes the beneficiary's Social Security Income (SSI) status.	CHAR	1	0	N
CDE_BUY_ELIG	Buy-in eligibility code designed to provide State agencies with a method of identifying the specific catagory of assistance for each individual enrolled.	CHAR	2	0	N
MISC_CDE_DTE	In most situations, this field is blank. However, if the CDE_BUY_TXN field is "21" (and CDE_BUY_SUB is "B"), "22", "25", or "29", a date is present (MMYY). If the CDE_BUY_TXN field is "28", an agency code is present and the fourth position is blank.	CHAR	8	0	N
DTE_BILLING	A numeric field which designates the billing date sent on the CMS file.	NUMBER	8	0	N

Column Name	Description	Type	Length	Precision	Primary Key
DTE_MEDICARE	A date which designates the month in which the beneficiary attained age 65 or became entitled to Hospital Insurance benefits (Part A).	NUMBER	8	0	N
CDE_BUY_TXN	First two positions of a four position numeric code, the buy-in transaction code identifies the type of record conveyed by the transaction.	CHAR	2	0	N
CDE_BUY_MODI	Last two positions of a four position numeric code, the buy-in transaction code modifier provides the rationale for the action. Could be spaces.	CHAR	2	0	N
CDE_BUY_SUB	One position alphabetic sub-code, the buy-in sub-code further enchances the rationale for the action. Could be spaces.	CHAR	1	0	N
DTE_EFFECTIVE	The effective date of the transaction.	NUMBER	8	0	N
AMT_PREMIUM	Premium amount on the transaction. On an accretion acknowledgment record, this field reflects a debit for the amount the State owes. On a deletion acknowledgment record, this field reflects a credit for the amount due to the State.	NUMBER	8	2	N
IND_MORE_BUYIN	Indicates whether there is more buy-in billing information kept on file because of a mismatch between CMS and the State MMIS.	CHAR	1	0	N
IND_ERROR	Indicates whether the transaction applied to the wrong beneficiary.	CHAR	1	0	N

Column Name	Description	Type	Length	Precision	Primary Key
DTE_STOP	Stop date from CMS	NUMBER	8	0	N
CDE_AGENCY	Agency code received from CMS	CHAR	3	0	N
AMT_PREM_RATE	Premium rate per period	NUMBER	8	2	N
IND_CREDIT	Credit/debit indicator	CHAR	1	0	N
ID_MEDICARE_NEW	New medicare claim number sent from CMS	CHAR	12	0	N
DTE_REPLY	Reply date to CMS	NUMBER	8	0	N
CDE_RIC	Record ID code received from CMS	CHAR	1	0	N
AMT_RED_PREM_RATE	Reduced premium rate.	NUMBER	8	2	N

3.13.10 T_BUYB_BILL_INFO

Contains more information on the buy-in Part B transactions from the billing file which correspond to valid Medicaid beneficiaries in the beneficiary database.

Column Name	Description	Type	Length	Precision	Primary Key
SAK_RECIP	The system assigned internal key for a unique recipient.	NUMBER	9	0	Y
SAK_BUYIN	The system assigned key to uniquely identify all of the recpient's buy-in Part B transactions. This column functions as a sak_short for the sak_recip.	NUMBER	4	0	Y
NAM_LAST	The last name of a beneficiary, according to CMS.	CHAR	24	0	N
NAM_FIRST	The first name of a beneficiary, according to CMS.	CHAR	15	0	N
NAM_MID_INIT	The middle initial of a beneficiary, according to CMS.	CHAR	1	0	N
CDE_SEX	A numeric code indicating the sex of the beneficiary, according to CMS (male "1", female "2", or unknown "3").	CHAR	1	0	N
DTE_BIRTH	The date of birth for the beneficiary, according to CMS.	NUMBER	8	0	N

Column Name	Description	Type	Length	Precision	Primary Key
ID_MEDICAID	Unique identifier for the beneficiary, according to CMS.	CHAR	12	0	N
ADR_ZIP_CODE	The five character zip code for the beneficiary, according to CMS.	CHAR	5	0	N
CDE_COUNTY	County code received from CMS	VARCHAR2	10	0	N
NUM_SSN	SSN received from CMS	CHAR	9	0	N
DTE_TO_CMS	Date response sent to CMS	NUMBER	8	0	N
DTE_BUY_PROC	Date processed by batch system	NUMBER	8	0	N

3.13.11 T_BUYB_DEMO_CHANGE

This table contains demographic data changes received from CMS through the Part B Billing File, 'E' record type. interChange does not apply these changes to member information unless requested by a customer, instead they are stored for historical purposes.

Column Name	Description	Type	Length	Precision	Primary Key
SAK_BUY_DEMO_B	System assigned key	NUMBER	9	0	Y
SAK_RECIP	The system assigned internal key for a unique recipient.	NUMBER	9	0	N
ID_MEDICARE	Member Medicare number	CHAR	12	0	N
NAM_LAST	Member last name	CHAR	24	0	N
NAM_FIRST	Member first name	CHAR	15	0	N
NAM_MID_INIT	Member middle initial	CHAR	1	0	N
CDE_SEX	Sex code	CHAR	1	0	N
DTE_BIRTH	Member DOB	NUMBER	8	0	N
NUM_SSN	Member SSN	CHAR	9	0	N
CDE_AGENCY	Agency code received from CMS	CHAR	3	0	N
NAM_LAST_EDB	Last name on EDB records	CHAR	24	0	N
NAM_FIRST_EDB	First name on EDB records	CHAR	15	0	N

Column Name	Description	Type	Length	Precision	Primary Key
NAM_MID_INIT_EDB	Middle initial on EDB records	CHAR	1	0	N
CDE_SEX_EDB	Sex on EDB records	CHAR	1	0	N
DTE_BIRTH_EDB	DOB on EDB records	NUMBER	8	0	N
NUM_AGENCY_CLIENT_ID	Agency Client ID number	CHAR	20	0	N
DTE_BUY_PROC	Date processed in batch	NUMBER	8	0	N
NUM_SSN_EDB	SSN on EDB record	CHAR	9	0	N
CDE_RIC	Record ID code received from CM	CHAR	1	0	N

3.13.12 T_BUYB_ERROR

This table stores records from CMS that have failed basic validation and cannot be linked to a member.

Column Name	Description	Type	Length	Precision	Primary Key
SAK_BUYB_ERROR	System assigned key	NUMBER	9	0	Y
DTE_BUY_PROC	Date processed by Buy-In receiving system	NUMBER	8	0	N
DSC_COMPLETE_TXN	Original transaction received from CMS.	VARCHAR2	500	0	N

3.13.13 T_BUYB_EXCEPT

Contains the buy-in Part B transactions for the premium file, whose corresponding transactions from the billing file do not match any beneficiary in the beneficiary database.

Column Name	Description	Type	Length	Precision	Primary Key
SAK_BUYB_EXCEPT	The system assigned key to identify the exception buy-in Part B transactions.	NUMBER	9	0	Y
DTE_BUY_PROC	Date of creation for this transaction.	NUMBER	8	0	N
ID_MEDICARE	Current Medicare ID for the beneficiary, according to CMS.	CHAR	12	0	N
NAM_LAST	The last name of a beneficiary, according to CMS.	CHAR	24	0	N
NAM_FIRST	The first name of a beneficiary, according to CMS.	CHAR	15	0	N
NAM_MID_INIT	The middle initial of the beneficiary, according to CMS.	CHAR	1	0	N
CDE_SEX	A numeric code indicating the sex of the beneficiary, according to CMS (male "1", female "2", or unknown "3").	CHAR	1	0	N
DTE_BIRTH	The date of birth for the beneficiary, according to CMS.	NUMBER	8	0	N
CDE_BUY_ELIG	Buy-in eligibility code designed to provide State agencies with a method of identifying the specific catagory of assistance for each individual enrolled.	CHAR	2	0	N

Column Name	Description	Type	Length	Precision	Primary Key
CDE_BUY_TXN	First two positions of a four position numeric code, the buy-in transaction code identifies the type of record conveyed by the transaction. When a response appears on the billing file, this code becomes the buy-in transaction code modifier.	CHAR	2	0	N
DTE_EFFECTIVE	Effective date for the transaction.	NUMBER	8	0	N
ID_MEDICAID	Unique identifier for the beneficiary, according to CMS.	CHAR	12	0	N
DTE_TO_CMS	Date already or to be sent to CMS.	NUMBER	8	0	N
CDE_AGENCY	Agency code as provided by CMS.	CHAR	3	0	N
NUM_SSN	SSN as provided by CMS.	CHAR	9	0	N
CDE_RIC	Record ID code from CMS.	CHAR	1	0	N
DTE_STOP	Eligibility termination date as provided by CMS.	NUMBER	8	0	N
SAK_BUYB_MISMATCH	The system assigned key to identify the mismatched buy-in Part B transactions.	NUMBER	9	0	N

3.13.14 T_BUYB_MISMATCH

Contains the buy-in Part B transactions from the billing file, which either have a different BID No or have both a different current Medicare ID and Date of Birth in the beneficiary database.

Column Name	Description	Type	Length	Precision	Primary Key
SAK_BUYB_MISMATCH	The system assigned key to identify the mismatched buy-in Part B transactions.	NUMBER	9	0	Y
DTE_BUY_PROC	Date the buy-in Part B billing file processed that contained this transaction.	NUMBER	8	0	N
ID_MEDICARE	Current Medicare ID for the beneficiary, according to CMS.	CHAR	12	0	N
NAM_LAST	The last name of a beneficiary, according to CMS.	CHAR	24	0	N
NAM_FIRST	The first name of a beneficiary, according to CMS.	CHAR	15	0	N
NAM_MID_INIT	The middle initial of the beneficiary, according to CMS.	CHAR	1	0	N
CDE_SEX	A numeric code indicating the sex of the beneficiary, according to CMS (male "1", female "2", or unknown "3").	CHAR	1	0	N
DTE_BIRTH	The date of birth for the beneficiary, according to CMS.	NUMBER	8	0	N
ID_MEDICARE_NEW	New Medicare ID for the beneficiary, according to CMS. Could be spaces.	CHAR	12	0	N

Column Name	Description	Type	Length	Precision	Primary Key
CDE_BUY_LIV_ARNG	A one position alphabetic code of "D" which indicates that the beneficiary is a resident of a Title XIX institution. Could be spaces.	CHAR	1	0	N
CDE_BUY_SSI	One-position alphabetic code that describes the beneficiary's Social Security Income (SSI) status.	CHAR	1	0	N
CDE_BUY_AGENCY	A three position alphanumeric code assigned to the last entity (State) which had jurisdiction over the (beneficiary's) account.	CHAR	3	0	N
CDE_BUY_ELIG	Buy-in eligibility code designed to provide State agencies with a method of identifying the specific catagory of assistance for each individual enrolled.	CHAR	2	0	N

Column Name	Description	Type	Length	Precision	Primary Key
MISC_CDE_DTE	In most situations, this field is blank. However, if the CDE_BUY_TXN field is "21" (and CDE_BUY_SUB is "B"), "22", "25", or "29", a date is present (MMYY). If the CDE_BUY_TXN field is "28", an agency code is present and the fourth position is blank.	CHAR	8	0	N
DTE_BILLING	A four position numeric field which designates the billing file on which the transaction appears. The billing date is 2 months after the current update month.	NUMBER	8	0	N
DTE_MEDICARE	A date which designates the month in which the beneficiary attained age 65 or became entitled to Hospital Insurance benefits (Part A).	NUMBER	8	0	N
CDE_BUY_TXN	First two positions of a four position numeric code, the buy-in transaction code identifies the type of record conveyed by the transaction.	CHAR	2	0	N

Column Name	Description	Type	Length	Precision	Primary Key
CDE_BUY_MODI	Last two positions of a four position numeric code, the buy-in transaction code modifier provides the rationale for the action. Could be spaces.	CHAR	2	0	N
CDE_BUY_SUB	One position alphabetic sub-code, the buy-in sub-code further enchances the rationale for the action. Could be spaces.	CHAR	1	0	N
DTE_EFFECTIVE	Effective date for the transaction.	NUMBER	8	0	N
ID_MEDICAID	Unique identifier for the beneficiary, according to CMS.	CHAR	12	0	N
ADR_ZIP_CODE	The five character zip code for the beneficiary, according to CMS.	CHAR	9	0	N
NUM_SSN	SSN as received from CMS	CHAR	9	0	N
CDE_RIC	Record ID received from CMS	CHAR	1	0	N
DTE_STOP	End date received from CMS	NUMBER	8	0	N
CDE_COUNTY	County code received from CMS	VARCHAR2	10	0	N
AMT_DUE_OR_REFUND	Amount due or refunded from CMS	NUMBER	8	2	N
AMT_PREM_RATE	Monthly premium from CMS	NUMBER	8	2	N
IND_CREDIT	Credit/debit indicator from CMS	CHAR	1	0	N

Column Name	Description	Type	Length	Precision	Primary Key
AMT_REDUCED_PREM_RATE	Reduced premium rate from CMS	NUMBER	8	2	N
DTE_REPLY	Date reply transmitted to CMS	NUMBER	8	0	N
DTE_ADDITIONAL	Effective date from CMS	NUMBER	8	0	N
SAK_BUYB_EXCEPT	The system assigned key to identify the exception buy-in Part B transactions.	NUMBER	9	0	N
IND_LINKED	Was this row manually linked?	CHAR	1	0	N

3.13.15 T_BUYB_PERD

Contains the buy-in Part B coverage periods and the total premium paid for the period.

Column Name	Description	Type	Length	Precision	Primary Key
SAK_RECIP	The system assigned internal key for a unique recipient.	NUMBER	9	0	Y
SAK_BUYIN	The system assigned key to uniquely identify all of the member's Buyin Part B coverage periods. This column functions as a sak_short for the sak_recip.	NUMBER	4	0	Y
AMT_PREM_PRD	Total amount of Part B premium paid for the buy-in period.	NUMBER	8	2	N
DTE_EFFECTIVE	Effective date for the Part B buy-in premium.	NUMBER	8	0	N
DTE_END	End date for the Part B buy-in premium.	NUMBER	8	0	N

3.13.16 T_BUYB_PREM

Contains both pending and historical buy-in Part B transactions from the sending file.

Column Name	Description	Type	Length	Precision	Primary Key
SAK_RECIP	The system assigned internal key for a unique recipient.	NUMBER	9	0	Y

Column Name	Description	Type	Length	Precision	Primary Key
SAK_BUYIN	The system assigned key to uniquely identify all of the member's buy-in Part A transactions. This column functions as a sak_short for the sak_recip.	NUMBER	4	0	Y
DTE_BUY_PROC	Date of creation for this transaction.	NUMBER	8	0	N
ID_MEDICARE	Current Medicare ID for the beneficiary.	CHAR	12	0	N
CDE_BUY_ELIG	Buy-in eligibility code designed to provide State agencies with a method of identifying the specific catagory of assistance for each individual enrolled.	CHAR	2	0	N
CDE_BUY_TXN	First two positions of a four position numeric code, the buy-in transaction code identifies the type of record conveyed by the transaction. When a response appears on the billing file, this code becomes the buy-in transaction code modifier.	CHAR	2	0	N
DTE_EFFECTIVE	Effective date for the transaction.	NUMBER	8	0	N
IND_SOURCE	This is the source of the transaction ('A' = automatic batch process, 'M' = manual creation or modification).	CHAR	1	0	N
DTE_TO_CMS	Date already or to be sent to CMS.	NUMBER	8	0	N
DTE_75_STOP	Stop date transmitted to CMS.	NUMBER	8	0	N
CDE_AGENCY	Agency code transmitted to CMS.	CHAR	3	0	N
ID_MEDICAID	Medicaid ID transmitted to CMS.	CHAR	12	0	N
CDE_RIC	Record ID code that generated this premium entry.	CHAR	1	0	N
IND_SHIPPED	Sent to CMS	CHAR	1	0	N

3.13.17 T_BUY_PARMS

This table stores customization information for the customer, such as maximum months of retroactive eligibility, agency codes and so on. This allows greater flexibility in the application without expensive custom programming.

Column Name	Description	Type	Length	Precision	Primary Key

Column Name	Description	Type	Length	Precision	Primary Key
TXT_PARM	Parameter name	CHAR	10	0	Y
TXT_VALUE	Parameter value	CHAR	40	0	N
DSC_PARM	Descriptino of parameter	VARCHAR2	100	0	N

3.13.18 T_BUY_PARTD_LIS

This table stores the manual entries until transmission to CMS

Column Name	Description	Type	Length	Precision	Primary Key
SAK_PARTD_LIS	System generated unique key	NUMBER	9	0	Y
DTE_ELIG	Part D eligibility date (CCYYMM)	NUMBER	6	0	N
ID_MEDICARE	Medicare ID number	CHAR	15	0	N
IND_RRB	RRB/HIC number indicator (R or H)	CHAR	1	0	N
NUM_SSN	Social Security Number	CHAR	9	0	N
ID_MEDICAID	Medicaid ID	CHAR	12	0	N
NAM_FIRST	First Name	CHAR	12	0	N
NAM_LAST	Last Name	CHAR	20	0	N
NAM_MIDDLE	Middle Name	CHAR	15	0	N
NAM_SUFFIX	Name suffix	CHAR	4	0	N
CDE_SEX	Gender (M, F or 9)	CHAR	1	0	N
DTE_BIRTH	Date of Birth	NUMBER	8	0	N
CDE_DUAL	Dual status code	CHAR	2	0	N
IND_FPL	Federal Poverty Level indicator (1, 2 or 9)	CHAR	1	0	N
IND_DRUG_COV	Medicaid drug coverage indicator (0, 1 or 9)	CHAR	1	0	N
IND_INSTITUTION	Institution indicator (Y, N or 9)	CHAR	1	0	N
IND_SUBS_APPR	Subsidy approval indicator (Y, N or 9)	CHAR	1	0	N
DTE_SUBS_APPR	Date subsidy was approved (CCYYMMDD)	NUMBER	8	0	N

Column Name	Description	Type	Length	Precision	Primary Key
DTE_SUBS_START	Date subsidy started (CCYYMMDD)	NUMBER	8	0	N
DTE_SUBS_END	Date subsidy ends (CCYYMMDD)	NUMBER	8	0	N
NUM_POV_PERCENT	Federal poverty percent level	NUMBER	8	0	N
NUM_SUBS_LEVEL	Portion of Part D subsidized (0, 50, 75, 100 or 999)	CHAR	3	0	N
CDE_INCOME_LVL	Income level used for subsidy (1, 2 or 9)	CHAR	1	0	N
CDE_RESOURCE_LVL	Resource level (1, 2 or 9)	CHAR	1	0	N
IND_PARTD_DENIAL	Basis of Part D subsidy denial	CHAR	1	0	N
IND_APPEAL	Results of an appeal (Y, N or 9)	CHAR	1	0	N
IND_SUBS_CHANGED	Change to previous determination (Y, N or 9)	CHAR	1	0	N
IND_SUBS_CANCEL	Indicates the subsidy sent in the previous transmission is cancelled (Y, N or 9)	CHAR	1	0	N
DTE_SENT	Date sent to CMS (0 if not yet sent)	NUMBER	8	0	N

3.13.19 T_CDE_BUY_BILL

Contains the buy-in transaction codes associated with the billing file.

Column Name	Description	Type	Length	Precision	Primary Key
CDE_BUY_TXN	First two positions of a four position numeric code, the buy-in transaction code identifies the type of record conveyed by the transaction.	CHAR	2	0	Y
CDE_BUY_MODI	Last two positions of a four position numeric code, the buy-in transaction code modifier provides the rationale for the action. Could be spaces.	CHAR	2	0	Y
CDE_BUY_SUB	One position alphabetic sub-code, the buy-in sub-code further enchances the rationale for the action. Could be spaces.	CHAR	1	0	Y

Column Name	Description	Type	Length	Precision	Primary Key
DSC_BUY_TXN	Description of the buy-in transaction code.	CHAR	256	0	N
CDE_TXN	Unknown.	CHAR	1	0	N
CDE_TXN_MOD	Unknown.	CHAR	1	0	N

3.13.20 T_CDE_BUY_ELIG

Contains the valid Part B buy-in eligibility codes with an active indicator displaying if each code is currently used by the State. Because the States are responsible for maintaining the accuracy of the codes, this table could change with a new implementation either with different active indicator flags or the addition of new codes (perhaps both).

Column Name	Description	Type	Length	Precision	Primary Key
CDE_BUY_ELIG	Buy-in eligibility code designed to provide State agencies with a method of identifying the specific catagory of assistance for each individual enrolled.	CHAR	2	0	Y
DSC_BUY_ELIG	Description of the buy-in eligibility code.	CHAR	256	0	N
IND_ACTIVE	A (Y/N) flag indicating if the buy-in eligiblity code is used by this State's buy-in system.	CHAR	1	0	N

3.13.21 T_CDE_BUY_PREM

Contains the buy-in transaction codes associated with the premium file.

Column Name	Description	Type	Length	Precision	Primary Key
CDE_BUY_TXN	First two positions of a four position numeric code, the buy-in transaction code identifies the type of record conveyed by the transaction. When a response appears on the billing file, this code becomes the buy-in transaction code modifier.	CHAR	2	0	Y
DSC_BUY_TXN	Description of the buy-in transaction code.	CHAR	256	0	N

3.13.22 T_RE_BASE

The member base contains basic information, such as name and address about a member. A member is a person that receives Medicaid coverage or coverage under a special state funded program.

Column Name	Description	Type	Length	Precision	Primary Key
SAK_RECIP	The system assigned internal key for a unique recipient.	NUMBER	9	0	Y

Contact Tracking Management System Detailed System Design

Kentucky MMIS Project

Cabinet for Health and Family Services
Department for Medicaid Services

March 7, 2008

Cabinet for Health and Family Services Department for Medicaid Services	
Role:	Name:
Author	Amy Sanders
Reviewer	Patti George
EDS Management	Glenn Jennings, Account Manager
Client	Commissioner Elizabeth A. Johnson Deputy Commissioner Carrie Banahan Claims Division Director Rhonda Poston Executive Director/CIO Lorna S. Jones Chief Technical Officer Sandeep Kapoor
DELIVERABLE TITLE: Contact Tracking Management System Detailed System Design	DATE SUBMITTED: March 7, 2008
FILE NAME: KY_MMIS_Contact_Tracking_Management_System_DSD_REFRESH_v3-1_FINAL_(03-07-2008).doc	AUTHORING TOOL: MSWord2003

Document Change Log

Version	Changed Date	Changed By	Reason
1.0	09/08/2007	Lynne Farner	Creation of new document – 1st draft.
2.0	09/11/2007	Lynne Farner	Revisions made according to internal review comments – 2nd Draft.
3.0	11/01/2007	Lynne Farner	Revisions made according to DMS walkthrough comments.
3.1	01/31/2008	Ron Chandler	Revisions made per DMS through Patti George.

Table of Contents

1 Introduction 1

2 Contact Tracking Management System (CTMS) Detailed System Design 2

2.1 System Flow 2
2.1.1 InterChange System Architecture 2
2.1.2 Subsystem Flow 3
2.2 Subsystem Description 6
2.2.1 Introduction to CTMS 6
2.3 CTMS Processes 7
2.3.1 CTMS Interface Process Model 7
2.4 Data Model 8
2.4.1 External System Interfaces 9
2.5 Job Scripts 10
2.5.1 CTMJD150 - CTMS file unzip for multiple files sent from SHPS 10
2.5.2 CTMJD200 - Load SHPS Contact Data 11
2.5.3 CTMJD250 - Archive Daily SHPS files 12
2.5.4 CTMJFAX - Process Electronic Fax updates to onBase 13
2.5.5 PWATCHCTMSSHPS - Filewatch for SHPS files to CTMS 14
2.6 Programs 15
2.6.1 CTMAVRS.SC -- Interface of AEVS and CTMS 15
2.6.2 CTMS_SHPS.SC -- Interface of SHPS and CTMS 17
2.7 Letters 19
2.8 Pages/Panels 20
2.8.1 PAGE: Contact Tracking Home Page 20
2.8.2 PANEL: Past Due 22
2.8.3 PANEL: Open Status 25
2.8.4 PANEL: Due Today 28
2.8.5 PANEL: Interim Past Due 31
2.8.6 PAGE: Contact Tracking Information Page 34
2.8.7 PANEL: Base Information-Questions 36
2.8.8 PANEL: Maintenance 43
2.8.9 PANEL: Base Information 45
2.8.10 PANEL: Provider Contact History 48
2.8.11 PANEL: Mini Search 51
2.8.12 PANEL: SHPS Detail 53
2.8.13 PANEL: Member Contact History 57
2.8.14 PANEL: CTMS Information 60
2.8.15 PAGE: Contact Tracking Management Sub Menu Page 65
2.8.16 PANEL: Sub Menu 66
2.8.17 PAGE: Contact Tracking Related Data Page 68
2.8.18 PANEL: Related Data 70
2.8.19 PANEL: Codes-Department 74
2.8.20 PANEL: Codes-Priority 77
2.8.21 PANEL: Codes-Note Type 80
2.8.22 PANEL: Codes-Reason 83
2.8.23 PANEL: Codes-Completion 86
2.8.24 PANEL: Codes-Method 89
2.8.25 PANEL: XREF - Dept Method Measure 92
2.8.26 PANEL: Codes-Source 96
2.8.27 PANEL: XREF - Specialist Department 99
2.8.28 PANEL: Codes-Status 102
2.8.29 PANEL: Codes-Type 105
2.8.30 PANEL: Other-Analyst Entry 108

2.8.31 PAGE: Contact Tracking Reports Page 112
2.8.32 PANEL: Reports - Provider Detail Results 113
2.8.33 PANEL: Reports - Member Detail Results 116
2.8.34 PANEL: Reports - Other Identifier Search 120
2.8.35 PANEL: Reports - Other Contact Detail Results 123
2.8.36 PANEL: Reports - Contact Timing Search 126
2.8.37 PANEL: Reports - Member Detail Search 129
2.8.38 PANEL: CTMS Reports 132
2.8.39 PANEL: Reports - Provider Detail Search 135
2.8.40 PANEL: Reports - Other Contact Detail Search 139
2.8.41 PANEL: Reports - Other Identifier Results 142
2.8.42 PANEL: Reports - Open Contact Search 145
2.8.43 PANEL: Reports - ContactTimingResults 148
2.8.44 PANEL: Reports - Open Contact Results 152
2.8.45 PAGE: Contact Tracking Search Page 155
2.8.46 PANEL: Search 156
2.8.47 PANEL: Search Results 160
2.9 Reports 163
2.10 Requirement Matrix and Cross Reference 164
2.11 Input/Outputs 167
2.11.1 Input files 167
2.11.2 Output Files 167
2.12 Internal and External Interfaces 168
2.12.1 Internal Interface Summary 168
2.12.2 External Interface Summary 169
2.13 Data Element Dictionary 173
2.13.1 T_ANALYST 173
2.13.2 T_CALL_CLERK_UNIT 173
2.13.3 T_CALL_NOTES 174
2.13.4 T_CALL_NOTIFICATION 174
2.13.5 T_CALL_OTHER_INFO 175
2.13.6 T_CALL_QUESTION 176
2.13.7 T_CALL_SHPS_DTL 178
2.13.8 T_CALL_TRACK 179
2.13.9 T_CDE_CALLER_TYPE 181
2.13.10 T_CDE_CALL_CATEG 182
2.13.11 T_CDE_CALL_CMPLTN 182
2.13.12 T_CDE_CALL_MEASURE 182
2.13.13 T_CDE_CALL_METHOD 183
2.13.14 T_CDE_CALL_PRIORITY 183
2.13.15 T_CDE_CALL_STATUS 184
2.13.16 T_CDE_CALL_TYPE 184
2.13.17 T_CDE_CALL_UNIT 184
2.13.18 T_CDE_CAN_RESP 185
2.13.19 T_CDE_NOTE_TYPE 185
2.13.20 T_LANGUAGE 186
2.14 Change Orders 187
2.14.1 Creating database for CTMS - 2480 187
2.14.2 CTMS Interim Implementation - 2585 188
2.14.3 CTMS conversion - 2655 189
2.14.4 KYAmend History panels change - 2675 190
2.14.5 KYAmend AutoPopulate ResoDueDate - 2677 192
2.14.6 KYAmend CTMS Reports Tab - 2678 194
2.14.7 KYAmend CTMS Home Pg Panels Sort - 2680 196
2.14.8 KY Amend Trading Partner Hist - 2681 198
2.14.9 KYAmend Chg Clerk to Specialist - 2684 200

2.14.10 KYAmend 40448 Contact Trkg Info - 3188 203
2.14.11 KYAmend 40450 Contact Track Base - 3189 205
2.14.12 KYAmend Member Contact History - 3190 207
2.14.13 KYAmend 40451 - Questions Panel - 3191 208
2.14.14 KYAmend 40447 Cont Trkg Min Srch - 3193 210
2.14.15 KYAmend Contact Tracking Home Pg - 3195 211
2.14.16 KYAmend Contact Trkg Sub Menu Pg - 3196 213
2.14.17 KY Amend CTI/CTMS accept calls - 3197 214
2.14.18 KYAmend Reports - Contact Timing - 3201 215
2.14.19 KYAmend Prov Contact Detl Report - 3205 217
2.14.20 KYAmend Member Contact Detl Rpt - 3206 219
2.14.21 KYAmend Other Contact Detail Rpt - 3207 221
2.14.22 KYAmend Other Identifier Report - 3208 223
2.14.23 KYAmend Add Entry to T-Analyst - 3217 225
2.14.24 KYAmend ATN change to OID - 3324 227
2.14.25 KYAmend Interim & Past Due Dept - 3328 229
2.14.26 KYAmend Resp Cd Panel Not needed - 3329 230
2.14.27 KYAmend Full descrip not showing - 3330 231
2.14.28 KYAmend Max Limit panel fields - 3331 232
2.14.29 KYAmend Dept correspond aging - 3353 234
2.14.30 KYAmend Sync KYMIST1 w/data model - 3507 236
2.14.31 KY Amend - XML from SHPS to CTMS - 3871 238
2.14.32 KY Amend - Display SHPS info - 3872 242
2.14.33 KY Amend SHPS/CTMS database chg - 3912 244
2.14.34 KY Amend Member & Provider label - 4018 246
2.14.35 KY Amend SHPS Contact Name - 4033 248
2.14.36 KY Amend CTMS Measurement Table - 4387 250
2.14.37 KY Amend Dept Method Measure - 4436 252
2.14.38 KY Amend Open Contact Report - 4706 254
2.14.39 KY AMEND - CTMS Auditing - 8086 256
2.14.40 KY Amend - index on T_CALL_TRACK - 8897 257

1 Introduction

This document provides the Contact Tracking Management System (CTMS) Requirements Detailed System Design (DSD). The DSD validates the design process and approach to solution, and identifies those items as specified in the Kentucky MMIS (KY MMIS) CTMS Design sessions.

2 Contact Tracking Management System (CTMS) Detailed System Design

2.1 System Flow

2.1.1 InterChange System Architecture

The system is logically divided into four primary components: Claims engine, User Interface, Batch, and the History and Back End Reporting. The Claims engine is responsible for receiving interactive transactions from external sources, adjudicating them, and returning the appropriate response. The User Interface is an N-tier application providing segregated and loosely coupled presentation, business logic, and data logic layers. The user interface provides access to the online subsystem functions through a thin client, the web browser. The Batch component is responsible for maintaining and reporting on data contained within the online database. The History and Back End reporting component is responsible for analyzing, reporting, and supporting the management of the activities that have occurred in the two front end systems. The system interfaces with a variety of data sources which influence processing within the system. The External data submission entities are organizations that supply information to the Medicaid Management Information System (MMIS).

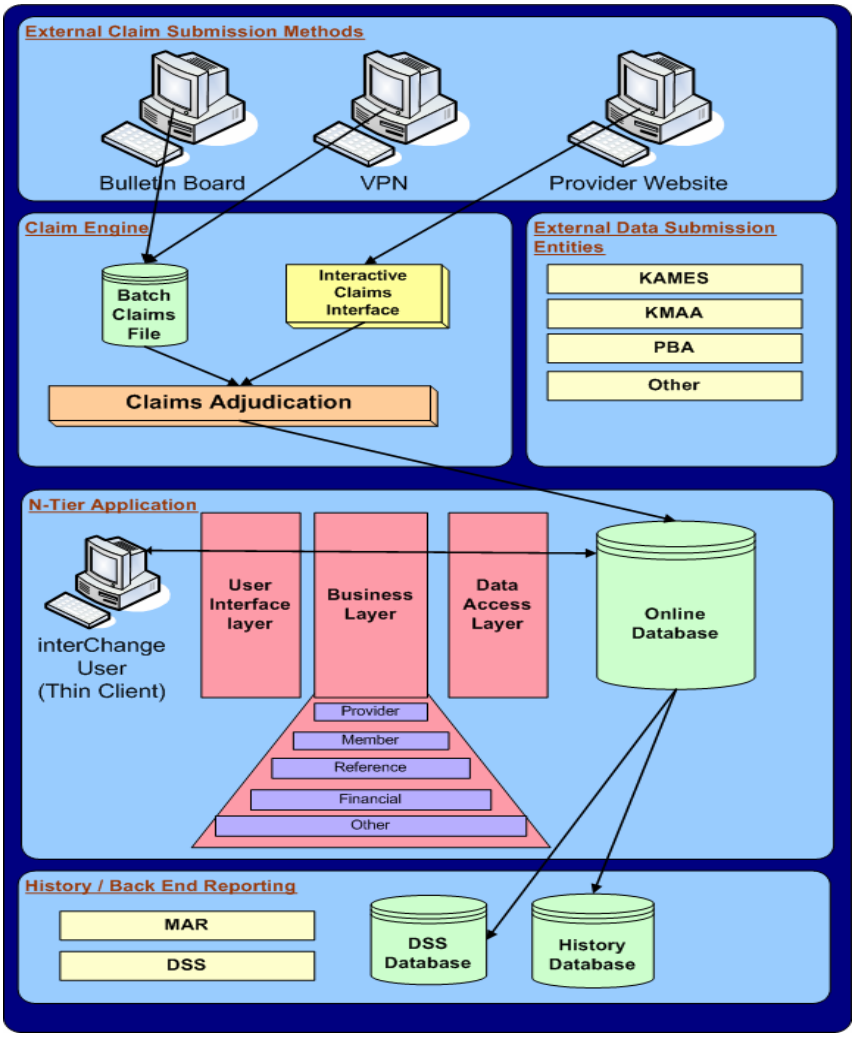

2.1.2 Subsystem Flow

The following diagram represents Contact Tracking Management System (CTMS) processing in a production context.

For readability, the two additional images display on the following pages.

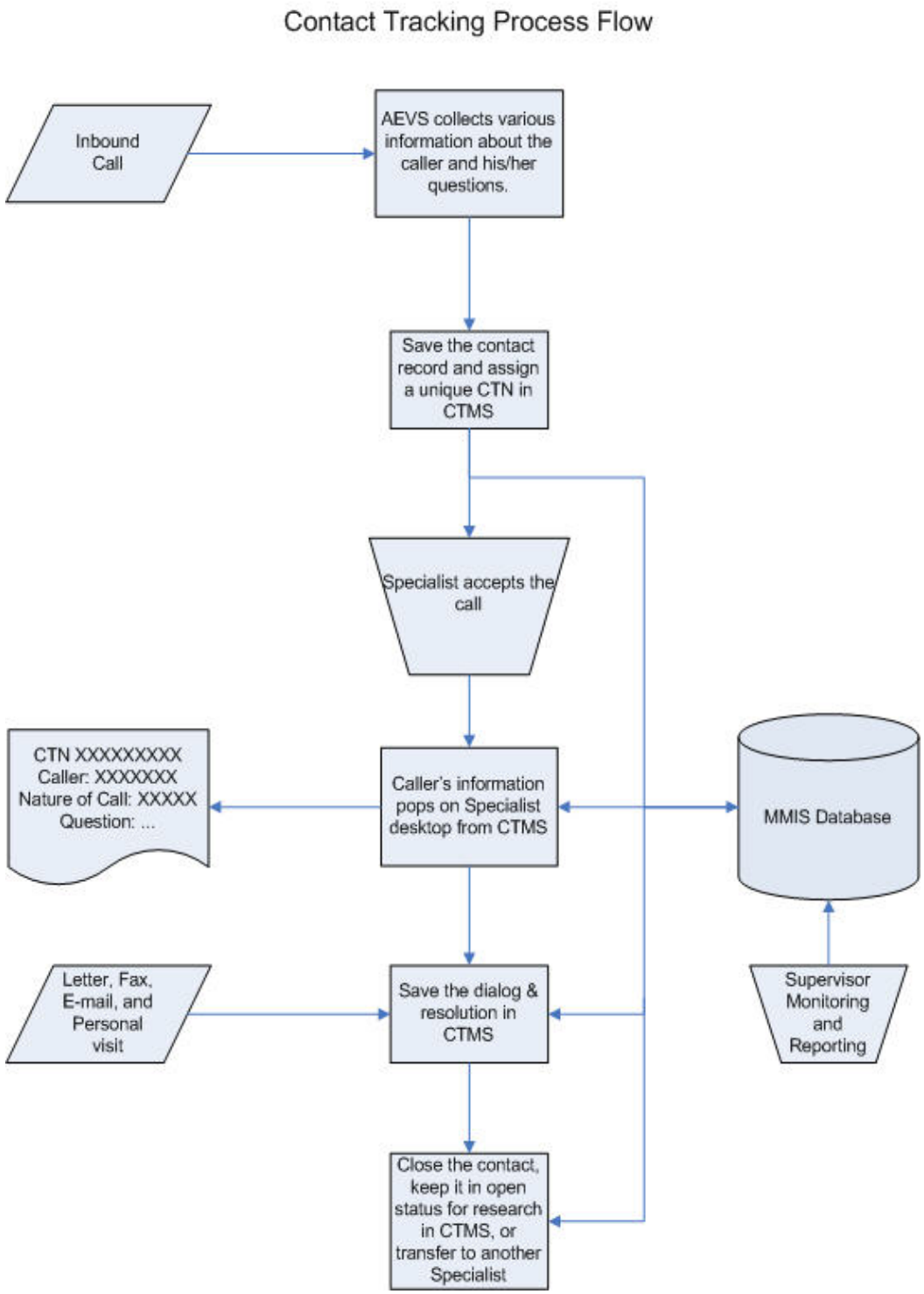

Contact Follow-up Process Flow

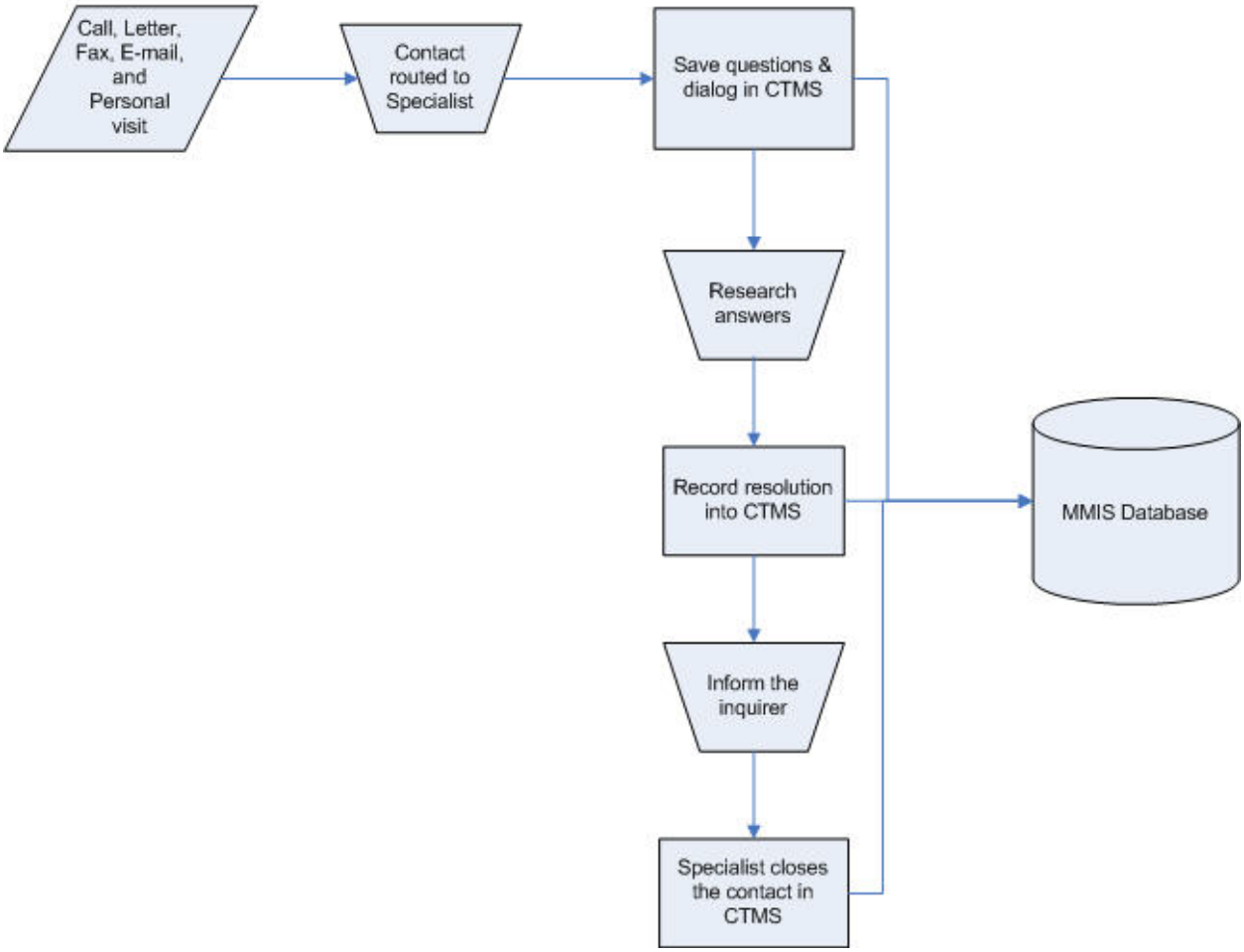

CTMS Operational Workflow

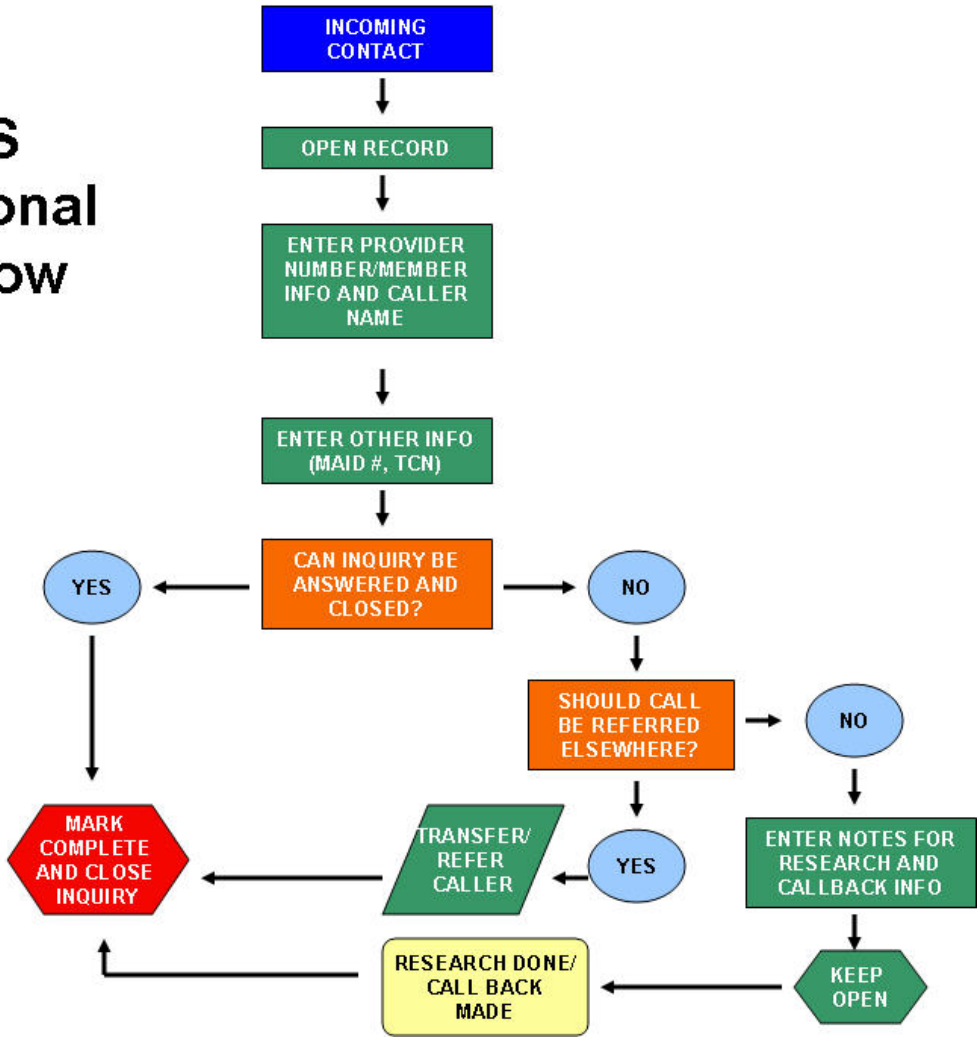

2.2 Subsystem Description

2.2.1 Introduction to CTMS

The CTMS (Contact Tracking Management System) application provides a means of access and storage for all information associated with a customer service contact. All contact information is associated with an assigned Contact Tracking Number (CTN). This information includes contact type, demographic information, questions, notes, and contact reasons. EDS staff enters information for each contact through online panels. Search pages allow users to sort and access contacts based on a variety of criteria. Reports are available based on open dates and status to assist the leadership in monitoring the progress of contacts.

2.3 CTMS Processes

2.3.1 CTMS Interface Process Model

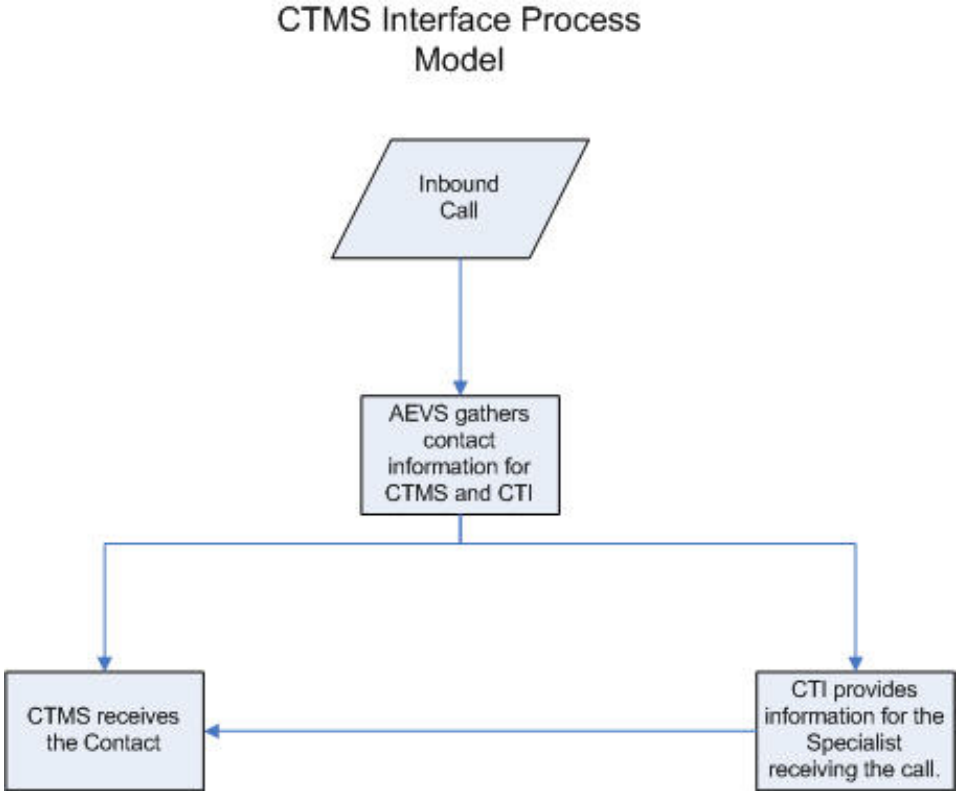

2.3.1.1 Process Description

CTMS interfaces with Automated Eligibility Verification System (AEVS) to capture data from telephone calls into the interChange system. CTI technology is used to pass the caller information to a specialist receiving the call. This information is displayed in the CTMS application. If a foreign language call comes in, the specialist initiates a conference call with a third party vendor language line.

2.3.1.2 InterChange Narrative

Telephone calls are captured automatically by the AEVS directly into the CTMS, even when only the self service features are used and the call is not transferred to a Specialist. Calls are tracked in CTMS and monitored through the use of searches and reports. Both search panels and reports panels will be displayed in the panels section of the CTMS DSD. A unique Contact Tracking Number (CTN) in CTMS is created for every phone call. Once the caller selects the option to talk to a Specialist, the call will be placed into a queue to wait for the next available Specialist. When the Specialist is available to answer the call, a “Screen Pop” from CTMS using CTI technology will appear before the call rings to the Specialist’s phone. The Specialist does not have to ask for the caller identifying information if it was previously entered in the AEVS. While the Specialist works with the caller on the phone, the contact information can be documented in interChange using CTMS.