INSTITUTION Capital Plaza Authority DRAWING NO. CPA PAGE NO CPA-2

OFFICE DWG NO	ARCH DWG NO	BLD'G SECTOR	NAME OF BUILDING	TITLE OF DRAWING	BRANCH OF WORK	DRAWN BY	DATE	REMARKS
CPA-42	A-36	C-2	Capital Plaza Office Bldg Frankfort, Ky	Exterior Wall Section	Architectural	WCH/DAH	5/15/67	Lee Potter Smith & Assoc
CPA-43	A-37	C-2		Exterior Wall Details - 1st thru 4th floors		W C H		
CPA-44	A-38	C-2		Enlarged Fround & Lobby Level Plans		"		
CPA-45	A-39	C-2		Exterior Wall Details - Ground & Lobby Levels		"		
CPA-46	A-40	C-2		Enlarged 13-A & 13-B Floor Plans & Details		WCH/FHD		
CPA-47	A-41	C-2		Enlarged 24th Floor Plans & Details		WCH/DAH		
CPA-48	A-42	C-2		Interior Elevations - Arrival Lobby		GHB/DAH		
CPA-49	A-43	C-2		Interior Elevations - Ground Level		G H B		
CPA-50	A-44	C-2		Core Elevations - Lobby Level		GHB/DAH		
CPA-51	A-45	C-2		Moving Stairway Details		G H B		
CPA-52	A-46	C-2		Terrazzo Pattern Layouts & Elevator Entrance Details		F H D		
CPA-53	A-47	C-2		Reflected Ceiling Plans & Ceiling Details		"		
CPA-54	A-48	C-2		Stair Details		D A H		
CPA-55	A-49	C-2		Miscellaneous Details		F H D		
CPA-56	A-50	C-2		Millwork Details		G H B		
CPA-57	A-51	C-2		Miscellaneous & Millwork Details		D A H		
CPA-58	A-52	B-1		Elevations		W D		
CPA-59	A-53	B-2		Elevations & Sections - Mero Street		BR/WD		
CPA-60	A-54	B-3		Elevations & Sections - High Street		WD/CAW		
CPA-61	A-55	C-1 2 3		Section A - Cross Section		BP/WD		
CPA-62	A-56	B, C, D, E, 2		Section B- Cross Section		BP/JB		
CPA-63	A-57	B-1 2 3		Wall Sections		B R		
CPA-64	A-58	C-1 2,3		Wall Sections		B R		
CPA-65	A-59	B-2, D-1 D-3		Stair Plans & Sections		J B		
CPA-66	A-60	B-3		Stair Plans & Sections		W D		
CPA-67	A-61	E-3		Stair Plans & Sections		W D		
CPA-68	A-62			Sections - Fan Rooms - Along Hill Street		B R		
CPA-69	A-63			Finish Schedule		G H B		
CPA-70	A-64			Finish Schedule		'		
CPA-71	A-65			Schedules		"		
CPA-72	A-66			Door Schedules		"		
CPA-73	A-67			Door Schedules		'		
CPA-74	A-68			Frame Profiled		"		
CPA-75	A-69			Frame Profiles		"		
CPA-76	A-70			Door & Frame Type		F H D		
CPA-77	S-1	B-1		Partial Ground Level Plan	Structural	J I		Praeger-Kavanagh-Waterbury
CPA-78	S-2	B-2		" " " "		'		Structural-Engineers
CPA-79	S-3	B-3		" " " "		"		
CPA-80	S-4	C-1		" " " "		"		
CPA-81	S-5	C-2		" " " "		"		
CPA-82	S-6	C-3		" " " "		"		

INSTITUTION Capital Plaza Authority DRAWING NO CPA PAGE NO CPA-1

OFFICE DWG NO	ARCH DWG NO	BLD'G SECTOR	NAME OF BUILDING	TITLE OF DRAWING	BRANCH OF WORK	DRAWN BY	DATE	REMARKS
CPA-83	S-7	D-1	Capital Plaza Office Bldg Frankfort Ky	Partial Ground Level Plan	Structural	J I	5/15/67	Praeger-Kavanagh-Waterburg
CPA-84	S-8	D-2		" " " "		"		Struc ural-Engineers
CPA-85	S-9	D-3		" " " "		"		
CPA-86	S-10	B-1		" Mezzanine Framing Plan				
CPA-87	S-11	B-2		" " " "				
CPA-88	S-12	B-3		" " " "				
CPA-89	S-13	C-1		" " " "				
CPA-90	S-14	C-2		" " " "				
CPA-91	S-15	C-3		" " " "				
CPA-92	S-16	D-1		" " " "				
CPA-93	S-17	D-2		" " " "				
CPA-94	S-18	D-3		" " " "				
CPA-95	S-19	E-1		" " " "				
CPA-96	S-20	E-2		" " " "				
CPA-97	S-21	E-3		" " " "				
CPA-98	S-22	B-1		" Plaza Framing Plan				
" 99	S-23	B-2		" " " "				
" 100	S-24	B-3		" " " "				
" 101	S-25	C-1		" " " "				
" 102	S-26	C-3		" " " "				
" 103	S-27	D-1		" " " "				
" 104	S-28	D-2		" " " "				
" 105	S-29	D-3		" " " "				
" 106	S-30	E-1		" " " "				
" 107	S-31	E-2		" " " "		JM/BH		
" 108	S-32 2	E-3		" " " "				
" 109	S-33	B-1		" " Level "		J K		
" 110	S-34	B-2		" " " "		"		
" 111	S-35	B-3		" " " "		"		
" 112	S-36	C-1		" " " "		"		
" 113	S-37	C-2		" " " "		"		
" 114	S-38	C-3		" " " "		"		
" 115	S-39	D-1		" " " "		"		
" 116	S-40	D-2		" " " "		"		
" 117	S-41	D-3		" " " "		"		
" 118	S-42	E-1		" " " "		"		
" 119	S-43	E-2		" " " "		"		
" 120	S-44	E-3		" " " "		"		
" 121	S-45	C-2		" " " "		"		
" 122	S-46	C-2		1st Floor Framing Plan		"		
123	S-47	C-2		2nd thru 12th Floor Framing Plan		"		
				13A Floor Framing Plan		"		

INSTITUTION Capital Plaza Authority DRAWING NO CPA PAGE NO CPA-4

OFFICE DWG NO	ARCH DWG NO	BLD'G SECTOR	NAME OF BUILDING	TITLE OF DRAWING	BRANCH OF WORK	DRAWN BY	DATE	REMARKS
CPA-124	S-48	C-2	Capital Plaza Office Bldg Frankfort,Ky	13B & 14th Floor Framing Plans	Structural	J M	5/15/67	Lee Potter Smith & Assoc
CPA-125	S-49	C-2		15th - 23rd Floor Framing Plan		"		Praeger - Kavanagh - Waterburg
" 126	S-50	C-2		24th Floor Framing Plan		"		Structural - Engineers
" 127	S-51	C-2		Main Roof & Penthouse Roof Framing Plan		"		
" 128	S-52	C-2		Column Schedule & Corner Wall Details		"		
" 129	S-53	C-2		Precast Concrete I		D T C		
" 130	S-54	C-2		" " II		D A		
" 131	S-55	C-2		Details of Stairs No 1 & 2				
" 132	S-56	C-2		Wall Elevations				
" 133	S-57	C-2		General Notes & Typical Details				
" 134	S-58	C-2		Precast Concrete III		C A R		
" 135	S-59	C-2		" " IV				
" 136	S60	C-2		Stairs I				
" 137	S-61	C-2		" II				
" 138	S-62	C-2		" I				
" 139	S-63	C-2		" II				
" 140	S-64	C-2		Foundation & Miscellaneous Sections I				
" 141	S-65	C-2		" " " II				
" 142	S-66	C-2		" Schedule & Details		C A R		
" 143	S-67	C-2		Column Schedule		"		
" 144	S-68	C-2		Joist, Beam & Slab Schedules		"		
" 145	S-69	C-2		General Notes & Typical Details				
" 146	S-70	C-2		Typical & Miscellaneous Details				
" 147	S-71	C-2		Cooling & Miscellaneous Details		J B		
CPA-148				Title Sheet	Mechanical & Elect	FPT/DS		Lee Potter Smith & Assoc
" 149	U-1			Site Utilities Plan		"		
" 150	PH-1	B-1		Plumbing & Ventilating Plan - Ground Level		SWIFT		
" 151	PH-2	B-2		" " " " "		OGC/DS		
" 152	PH-3	B-3		" " " " "		"		
" 153	PH-4	C-3		" " " " "		D S		
" 154	PH-5	D-1		" " " " "		OGC/DS		
" 155	PH-6	D-2		" " " " "		"		
" 156	PH-7	D-3		" " " " "		"		
" 157	PH-8	B-1		" & Air Conditions Plan - Mezzanine Level		D S		
158	PH-9	B-2		" & Air Conditions Plan- Mezzanine Level		OGC/DS		
" 159	PH-10	B-3		" & Air Conditions Plan - Mezzanine Level		"		
" 160	PH-11	D-1		" & Ventilating Plan - " "		D S		
" 161	PH-12	D-2		" & Air Conditions Plan " "		"		
" 162	PH-13	D-3		" & Ventilating Plan " "		"		
" 163	PH-14	E-1		" " " " "		OGC/DS		
" 164	PH-15	E-2		" " " " "		"		

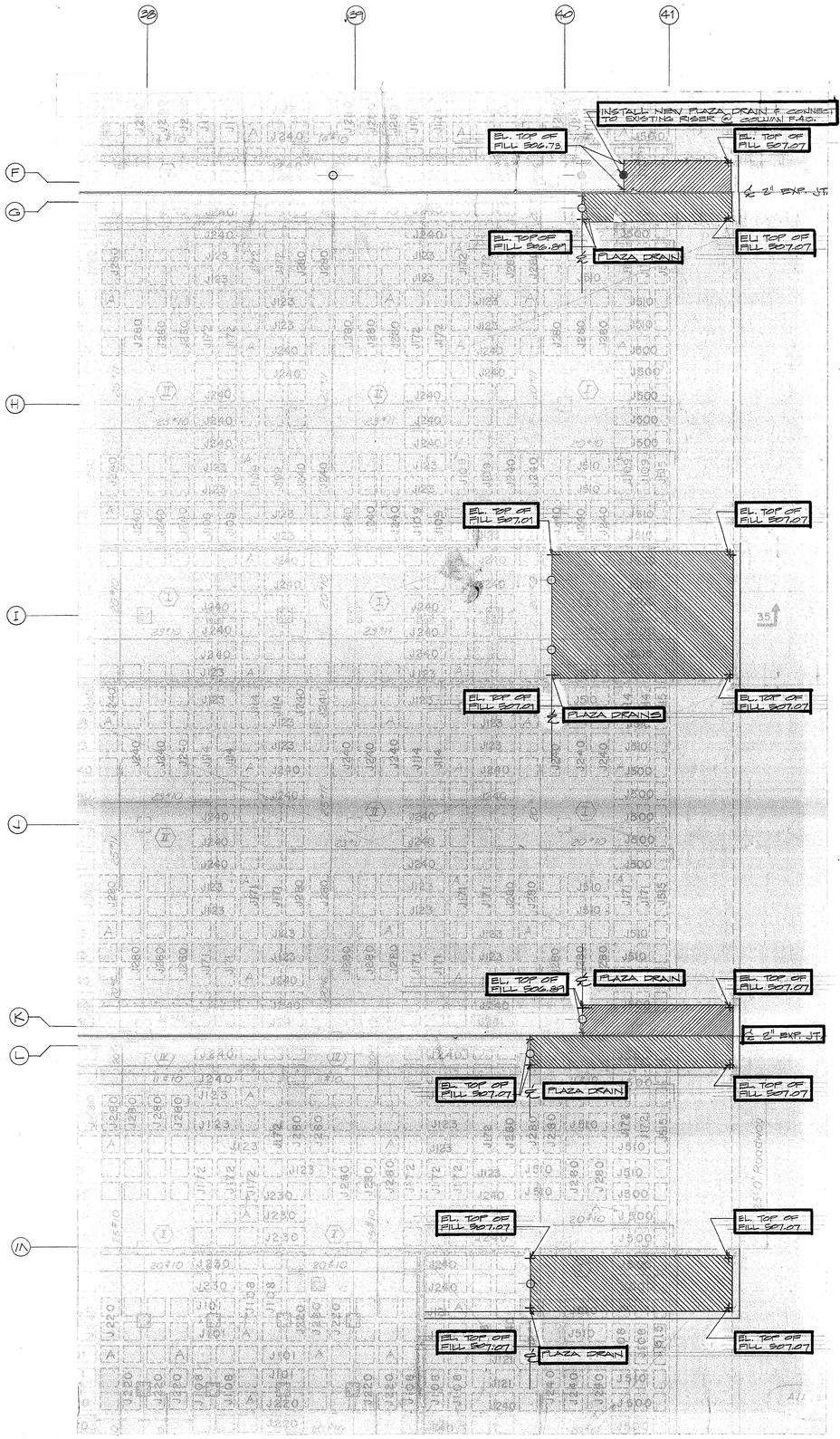

PARTIAL PLAZA FRAMING PLAN - SECTORS E-1, E-2 & E-3

SCALE 1/8" = 1'-0"

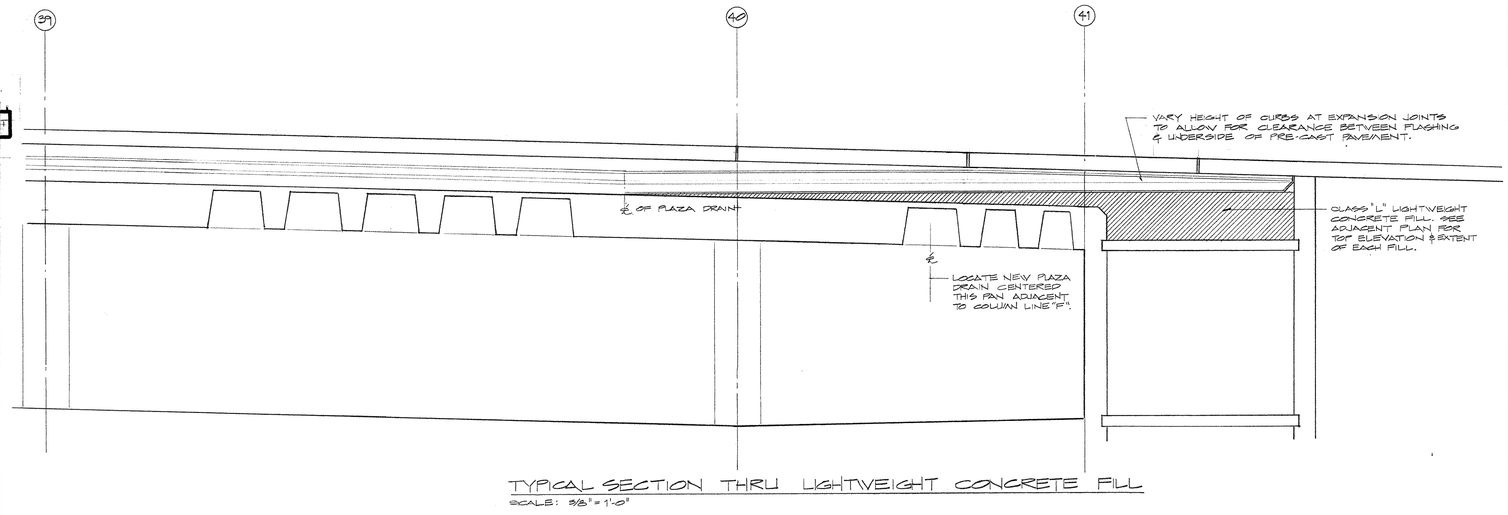

TYPICAL SECTION THRU LIGHTWEIGHT CONCRETE FILL

SCALE: 3/8" = 1'-0"

LOUIS R. HUGG JR. REGISTERED ARCHITECT COMMONWEALTH OF KENTUCKY

O. GUY CARTER 4371 REGISTERED PROFESSIONAL ENGINEER STATE OF KENTUCKY

CHANGE ORDER Nº 36 ITEM Nº 1

CAPITAL PLAZA OFFICE BUILDING
FRANKFORT KENTUCKY

DATE 20 MAY '71
COMM. NO. 5000.6

LEE POTTER SMITH, PRITCHETT, HUGG & CARTER
ARCHITECTS ENGINEERS
314 WILKINSON STREET FRANKFORT, KENTUCKY

DRAWING NO. 1 OF 1

COMMONWEALTH OF KENTUCKY
DEPARTMENT OF FINANCE – DIVISION OF ENGINEERING
FRANKFORT KENTUCKY

APPROVED BY AGENCY HEAD DATE

APPROVED BY OWNER DATE

CRP 76A

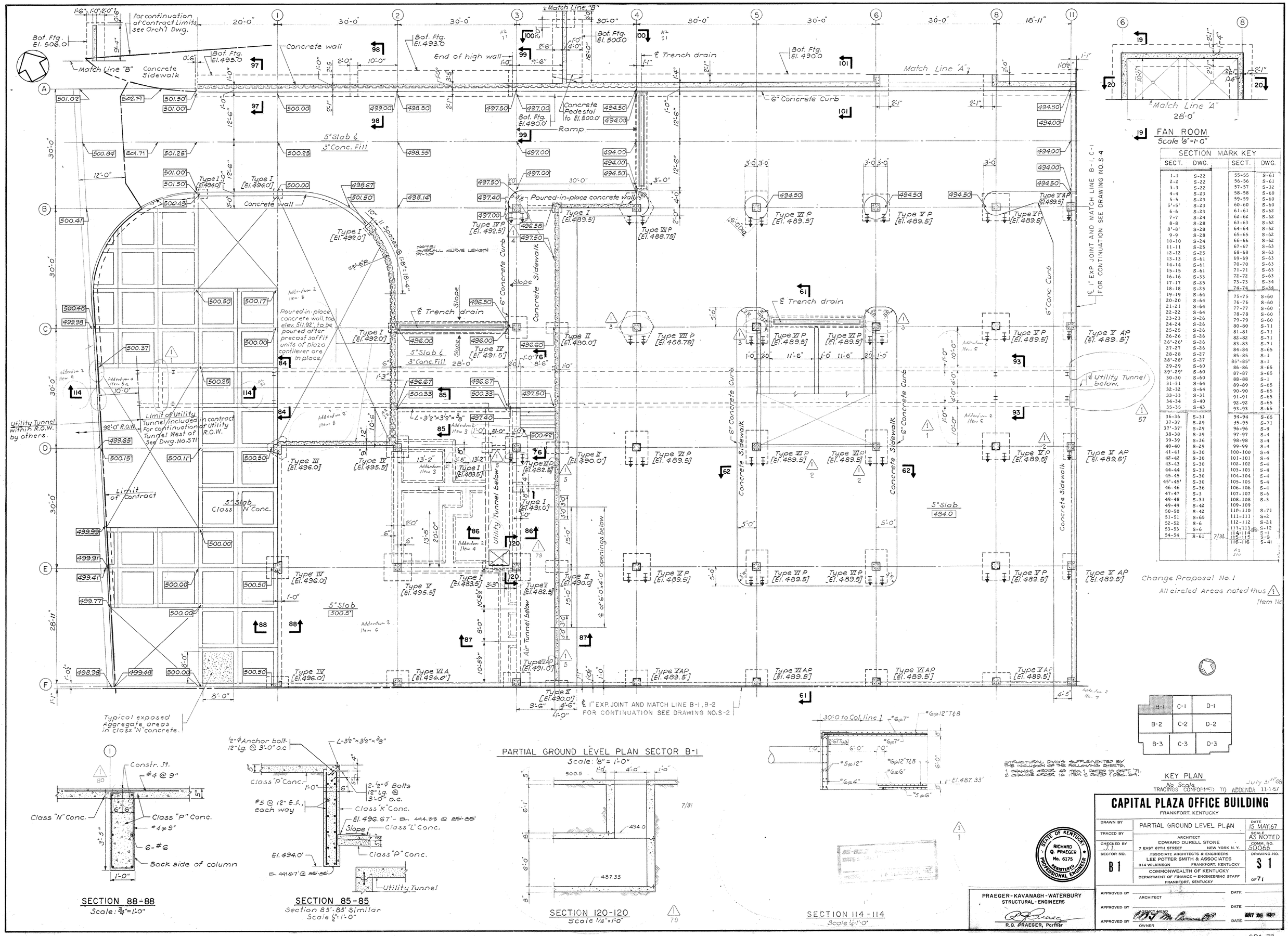
Match Line "B"
Concrete Sidewalk
For continuation of Contract Limits see Orch'l Dwg.
Bot. Ftg. El. 508.0
Bot. Ftg. El. 495.0
Concrete wall
Bot. Ftg. El. 493.0
End of high wall
℄ Match Line "B"
Bot. Ftg. El. 500.0
℄ Trench drain
Bot. Ftg. El. 490.0
Match Line "A"
6" Concrete Curb
Concrete Pedestal to El. 500.0
Bot. Ftg. El. 490.0'
Ramp
5" Slab ℄ 3" Conc. Fill
Poured-in-place concrete wall
Type I [El. 489.5]
Type I [El. 494.0]
Type I [El. 492.0]
Type II [El. 490.0]
Type III P [El. 492.5']
Type III P [El. 488.75]
Type IV [El. 491.5']
Type IV [El. 495.5]
Type V [El. 495.5]
Type V P [El. 489.5]
Type V A P [El. 489.5']
Type VI P [El. 489.5]
Type VII P [El. 488.75]
Type VIII P [El. 489.5]
Type IX P [El. 482.5]
Type X P [El. 491.0]
Type VI A [El. 496.0']
Type VI A P [El. 489.5']
Type VII A P [El. 489.5]
Type VIII A P [El. 489.5]
Type IX A P [El. 482.5]
Type X A P [El. 491.0]
NOTE: OVERALL CURVE LENGTH 31'-10"
Addendum 2 Item 8
Poured-in-place concrete wall, top elev. 511.92', to be poured after precast soffit units of plaza cantilever are in place.
6" Concrete Curb
Concrete Sidewalk
Slope
℄ Trench drain
5" Slab ℄ 3" Conc. Fill
L-3½"x3½"x⅜"
Addendum 2 Item 3
Addendum 2 Item 4
Utility Tunnel below
Air Tunnel Below
92'-0" R.O.W.
Utility Tunnel within R.O.W. by others
Limit of Utility Tunnel included in contract For continuation of Utility Tunnel West of See Dwg. No. 571
Limit of Contract
5" Slab Class 'N' Conc.
5" Slab 494.0
5" Slab 500.5'
Addendum 2 Item 6
Addendum 2 Item 7
Typical exposed Aggregate Areas in class 'N' concrete.
℄ 1" EXP. JOINT AND MATCH LINE B-1, B-2 FOR CONTINUATION SEE DRAWING NO. S-2
℄ 1" EXP JOINT AND MATCH LINE B-1, C-1 FOR CONTINUATION SEE DRAWING NO. S-4
Addendum 2 Item 5
Addendum 2 Item 9
Addendum 2 Item 10
Addendum 2 Item 11
Addendum 2 Item 12
Addendum 2 Item 13
Addendum 2 Item 14
Addendum 2 Item 15
Addendum 2 Item 16
Addendum 2 Item 17
Addendum 2 Item 18
Addendum 2 Item

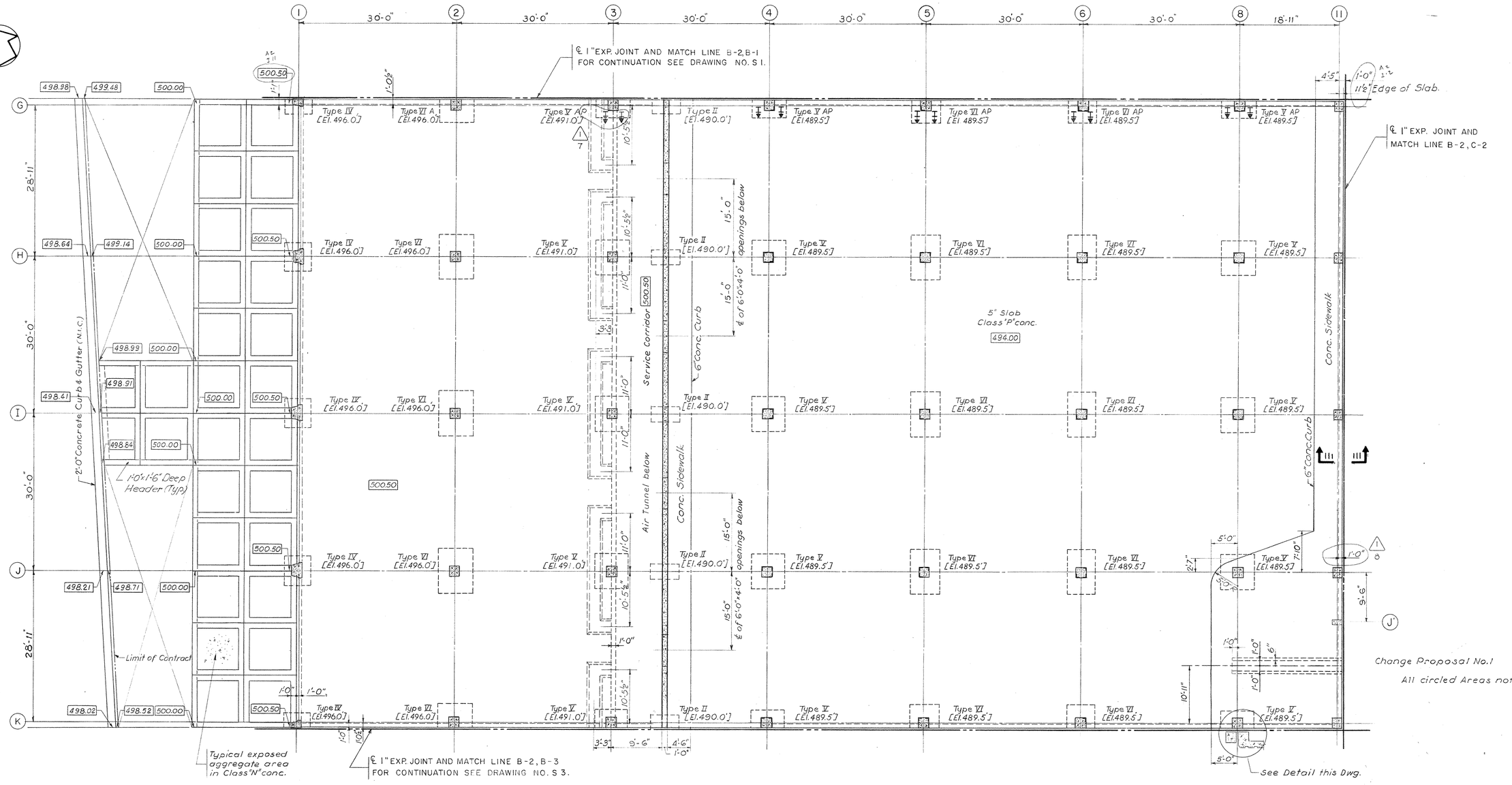

PARTIAL GROUND LEVEL PLAN SECTOR B-2
Scale 1/8" = 1'-0"

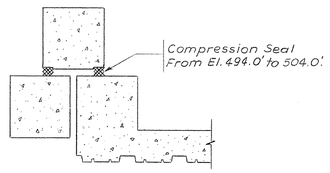

DETAIL OF COMPRESSION SEAL
Scale: 1/2" = 1'-0"

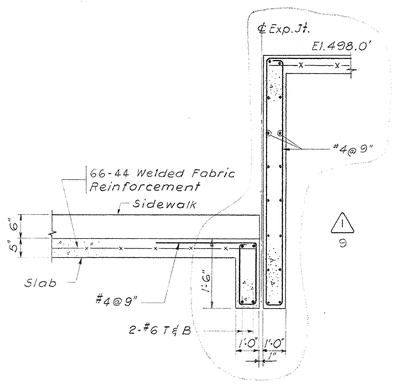

SECTION III - III
Scale: 3/4" = 1'-0"

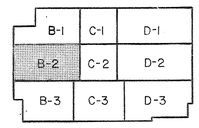

KEY PLAN
No Scale

TRACINGS CONFORMED TO ADDENDA 11-1-67

AS-BUILT DRAWINGS
DATE
BY

STATE OF KENTUCKY
RICHARD Q. PRAEGER
No. 6175
REGISTERED PROFESSIONAL ENGINEER

PRAEGER-KAVANAGH-WATERBURY
STRUCTURAL-ENGINEERS
R.Q. PRAEGER, Partner

CAPITAL PLAZA OFFICE BUILDING
FRANKFORT, KENTUCKY

DRAWN BY	PARTIAL GROUND LEVEL PLAN		DATE 15 MAY 67
TRACED BY			SCALE AS NOTED
CHECKED BY	ARCHITECT EDWARD DURELL STONE, 7 EAST 67TH STREET NEW YORK N.Y.		COMM. NO. 50066
SECTOR NO. B2	ASSOCIATE ARCHITECTS & ENGINEERS LEE POTTER SMITH & ASSOCIATES, 314 WILKINSON FRANKFORT, KENTUCKY		DRAWING NO. S 2
	COMMONWEALTH OF KENTUCKY DEPARTMENT OF FINANCE — ENGINEERING STAFF FRANKFORT, KENTUCKY		OF 71

APPROVED BY _____ ARCHITECT DATE _____
APPROVED BY _____ AGENCY HEAD DATE _____
APPROVED BY W. T. McConnell OWNER DATE MAY 24 1967

CPA-78

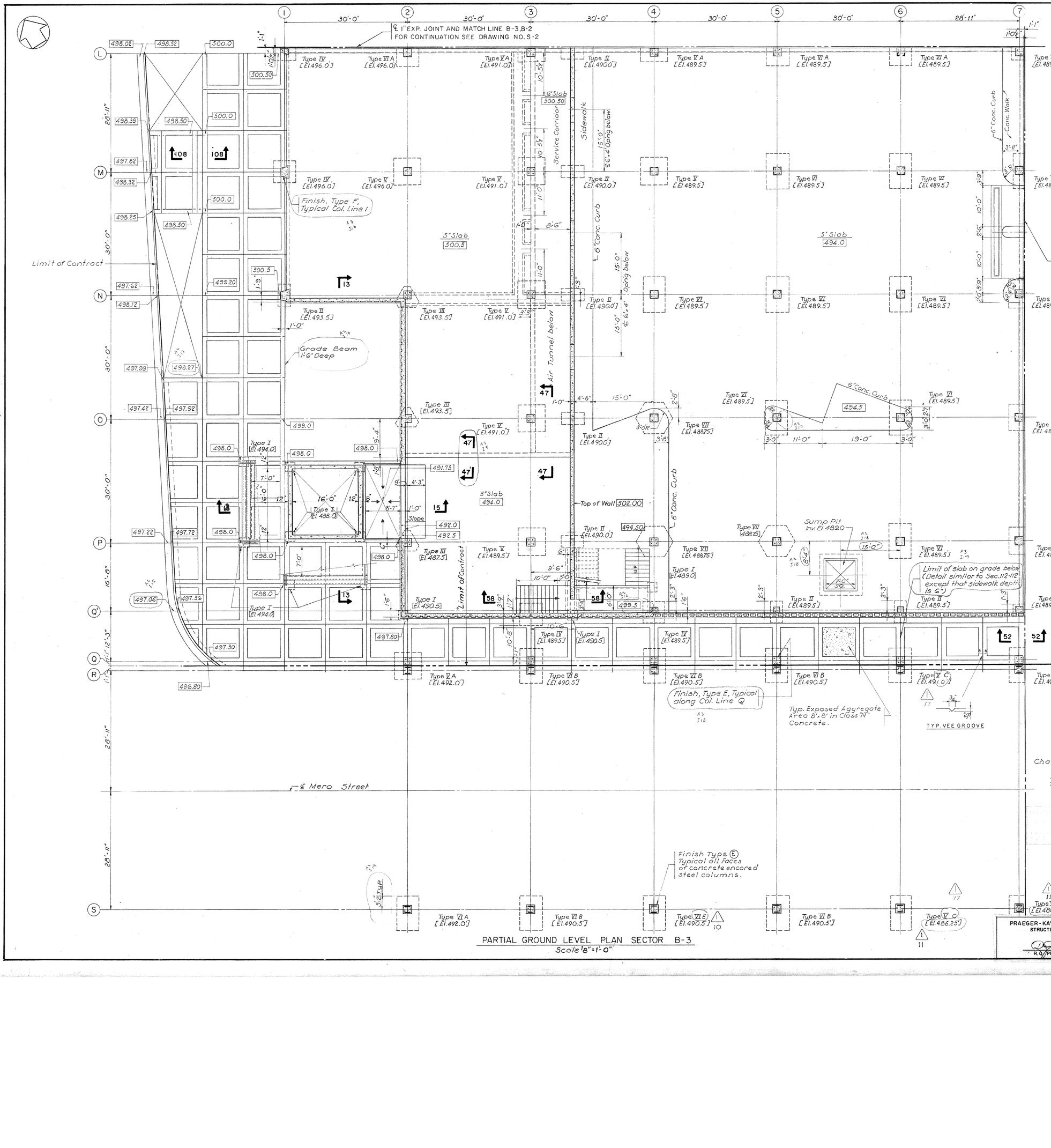

CAPITAL PLAZA OFFICE BUILDING

FRANKFORT, KENTUCKY

DRAWN BY	PARTIAL GROUND LEVEL PLAN	DATE 15 MAY 67
TRACED BY	ARCHITECT EDWARD DURELL STONE, 7 EAST 67TH STREET, NEW YORK N.Y.	SCALE AS NOTED
CHECKED BY J.S.		COMM. NO. 50066
SECTOR NO. B3	ASSOCIATE ARCHITECTS & ENGINEERS LEE POTTER SMITH & ASSOCIATES, 314 WILKINSON, FRANKFORT, KENTUCKY	DRAWING NO. S 3
	COMMONWEALTH OF KENTUCKY DEPARTMENT OF FINANCE - ENGINEERING STAFF FRANKFORT, KENTUCKY	OF 71

APPROVED BY _____ ARCHITECT DATE _____

APPROVED BY _____ DATE _____

APPROVED BY _____ AGENCY HEAD DATE MAY 24, 1967

OWNER

STATE OF KENTUCKY — RICHARD Q. PRAEGER No. 6175 — REGISTERED PROFESSIONAL ENGINEER

PRAEGER-KAVANAGH-WATERBURY
STRUCTURAL-ENGINEERS
R.Q. PRAEGER, Partner

CPA-79

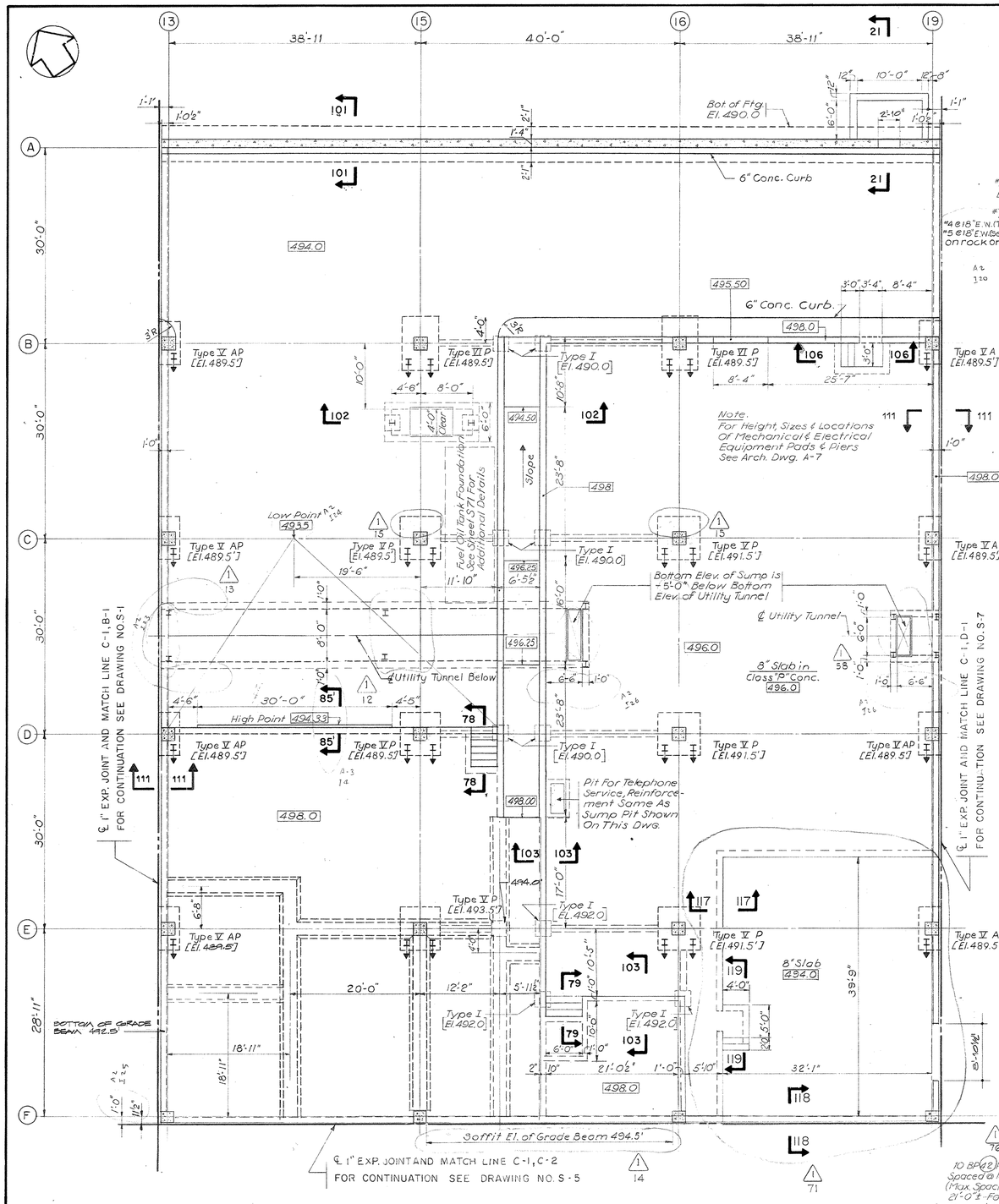

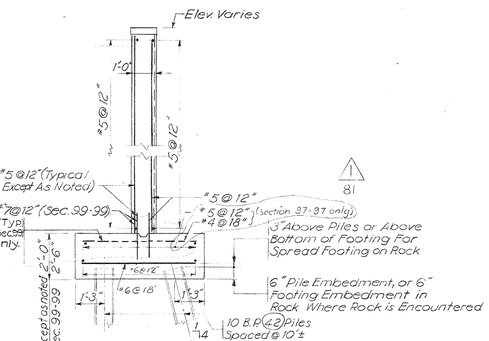

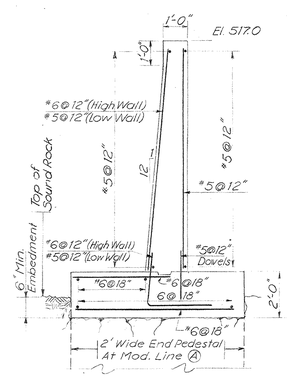

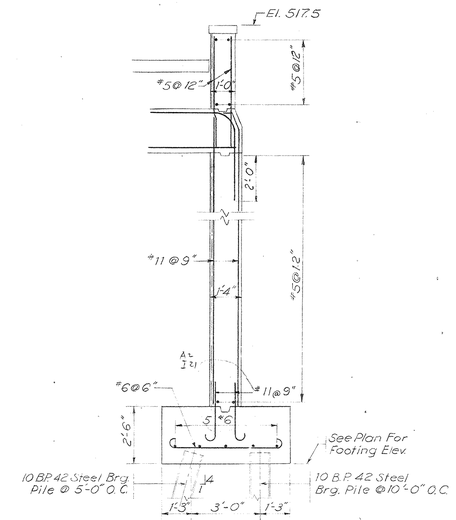

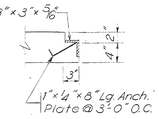

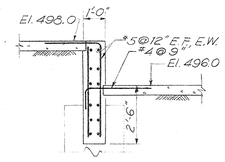

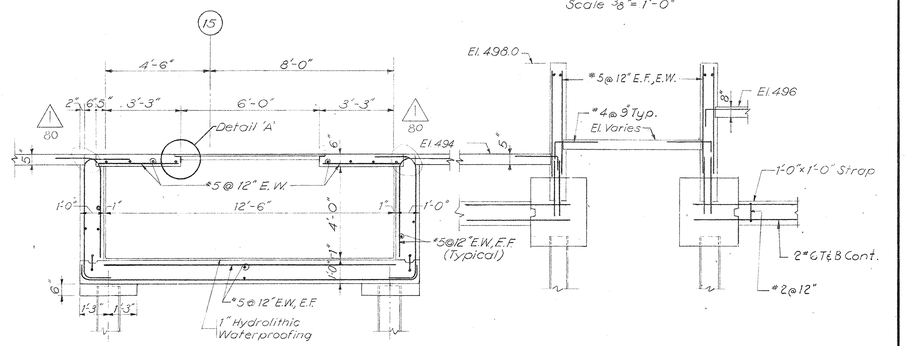

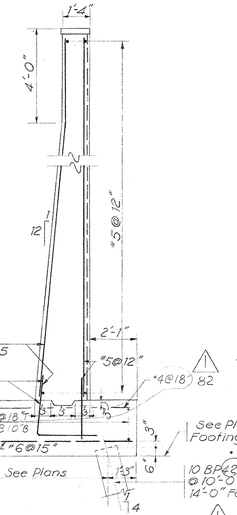

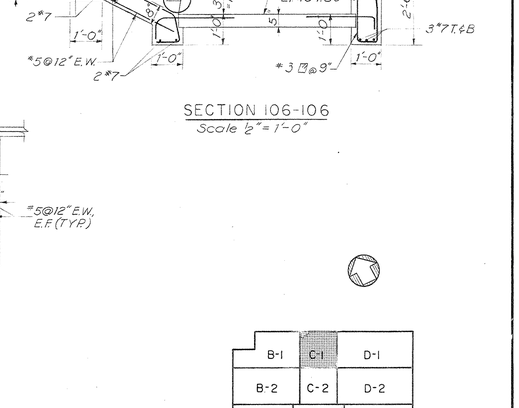

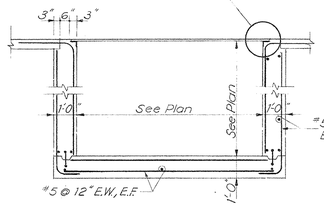

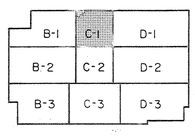

KEY PLAN
No Scale

Change Proposal No. 1

All circled Areas noted thus (1) Item No.

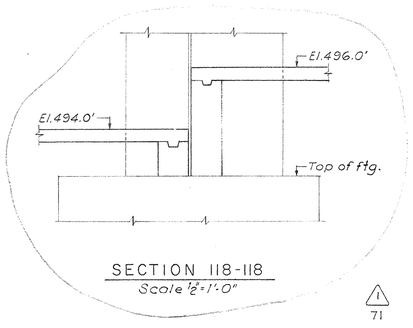

PARTIAL GROUND LEVEL PLAN SECTOR C-1
Scale 1/8" = 1'-0"

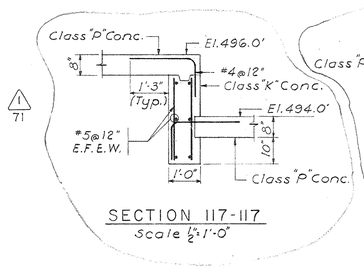

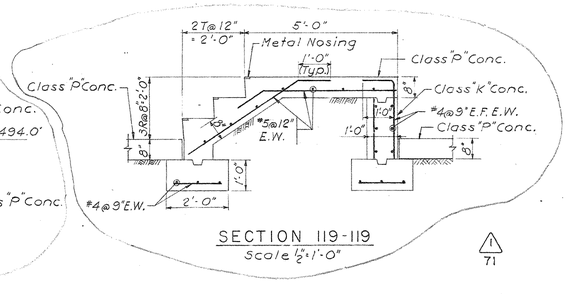

AS-BUILT DRAWINGS

STATE OF KENTUCKY — RICHARD Q. PRAEGER No. 6175 — REGISTERED PROFESSIONAL ENGINEER

PRAEGER-KAVANAGH-WATERBURY
STRUCTURAL-ENGINEERS
R. Q. PRAEGER, Partner

TRACINGS CONFORMED TO ADDENDA 11-1-67

CAPITAL PLAZA OFFICE BUILDING

FRANKFORT, KENTUCKY

DRAWN BY	PARTIAL GROUND LEVEL PLAN	DATE 15 MAY 67
TRACED BY		SCALE AS NOTED
CHECKED BY J.H.	ARCHITECT EDWARD DURELL STONE, 7 EAST 67TH STREET, NEW YORK N. Y.	COMM. NO. 5006.0
SECTOR NO. C1	ASSOCIATE ARCHITECTS & ENGINEERS LEE POTTER SMITH & ASSOCIATES, 314 WILKINSON, FRANKFORT, KENTUCKY	DRAWING NO. S 4
	COMMONWEALTH OF KENTUCKY, DEPARTMENT OF FINANCE — ENGINEERING STAFF, FRANKFORT, KENTUCKY	OF 71

APPROVED BY ARCHITECT DATE

APPROVED BY DATE

APPROVED BY OWNER DATE

CPA-80

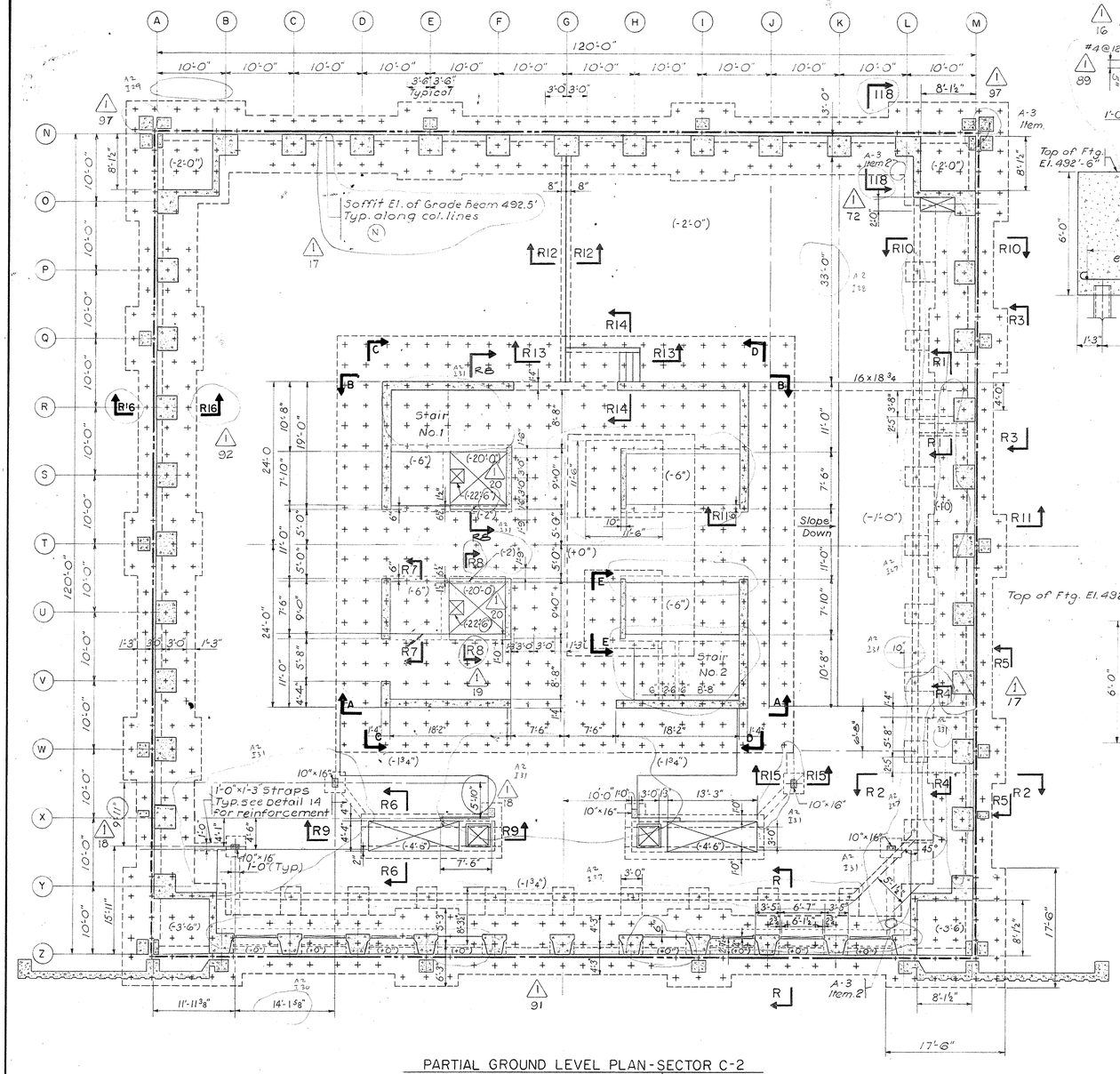

PARTIAL GROUND LEVEL PLAN - SECTOR C-2

DATUM FINISHED GROUND LEVEL ELEV. 498'0"

Scale 1/8"=1'-0"

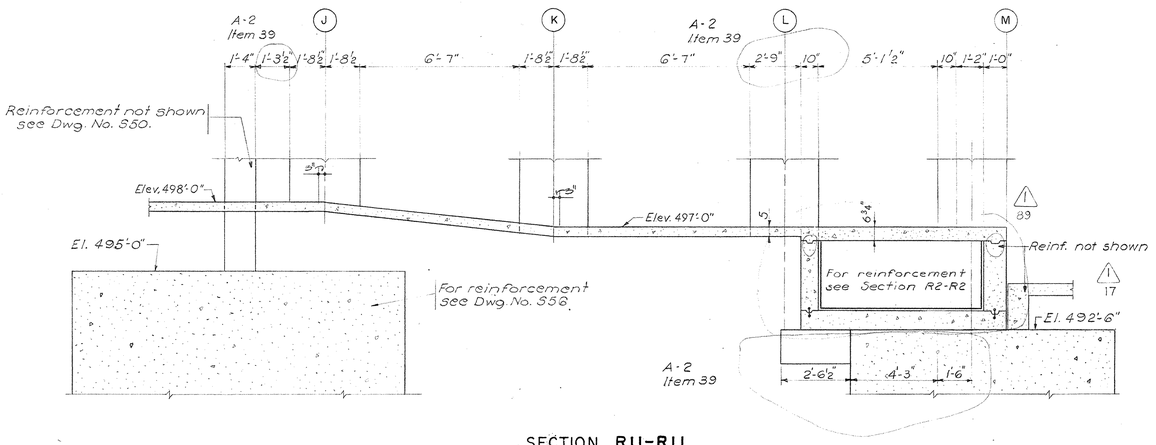

SECTION R11-R11

Scale: 3/8"=1'-0"

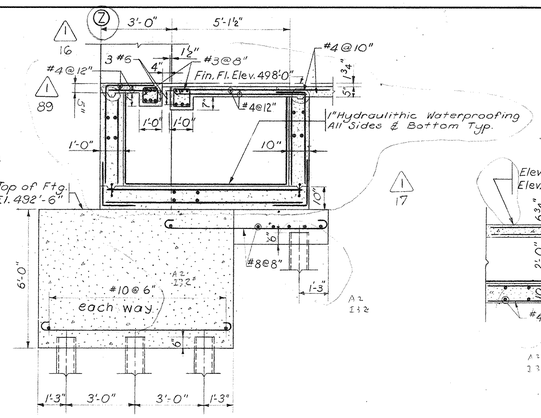

SECTION R-R

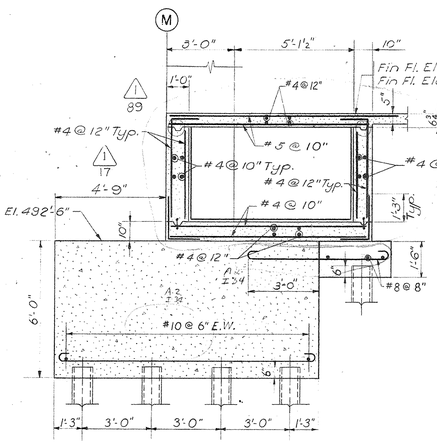

SECTION R2-R2
SECTION R10-R10

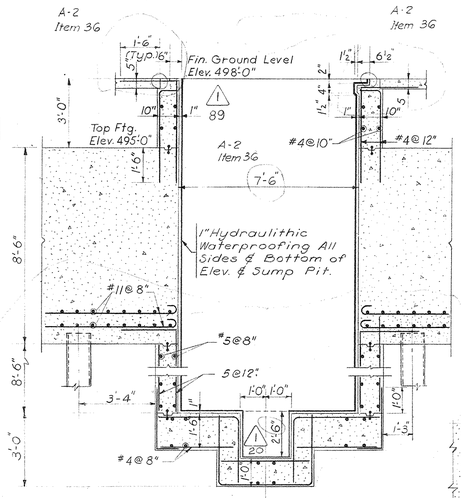

SECTION R8-R8

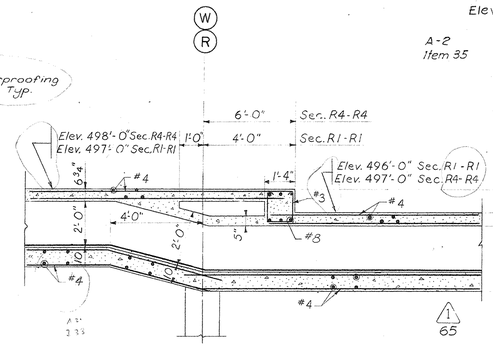

SECTION R1-R1
SECTION R4-R4

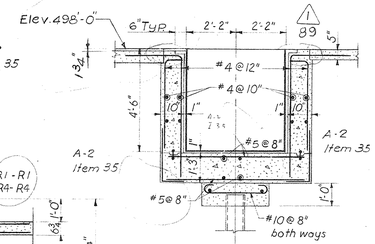

SECTION R6-R6

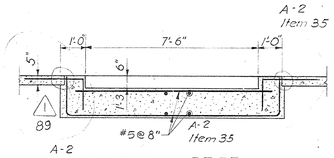

SECTION R7-R7

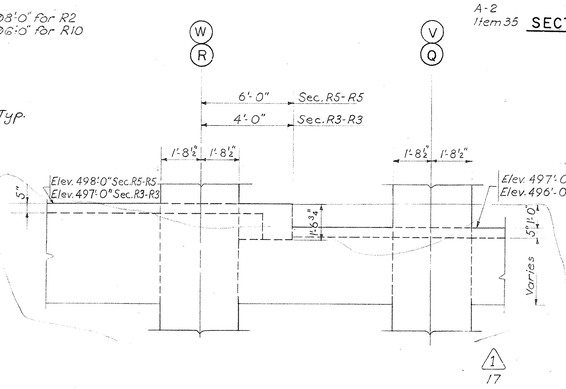

SECTION R3-R3
SECTION R5-R5

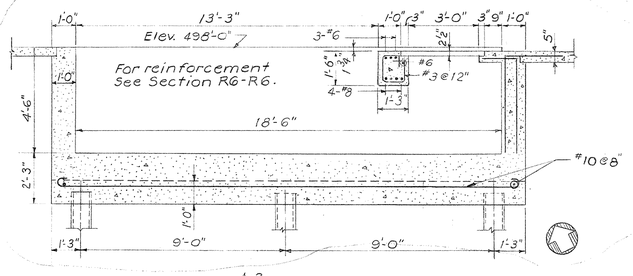

SECTION R9-R9

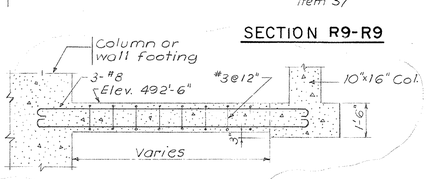

DETAIL 14

B-1	C-1	D-1
B-2	C-2	D-2
B-3	C-3	D-3

KEY PLAN

No Scale

TRACINGS CONFORMED TO ADDENDA 11-1-67

NOTES

1. For reinforcement of all 5" slabs on grade see Dwg. No. 557.
2. All piles are 10BP42 unless otherwise noted.
3. For Sections R12, R13, R14 & R15 see Dwg. No. 545.
4. For Sections A-A, B-B, C-C, D-D & E-E see Dwg. No. 556.
5. For column schedules & corner wall details see Dwg. No. 552.
6. All concrete slabs are 5" thick unless otherwise noted.
7. For stairs No. 1 & No. 2, see Dwg. No. 555.
8. For typical waterstop detail at col. & tunnel intersection see Dwg. No. S49.
9. For Section 118-118 see Dwg. No. S4.
10. For Section R16-R16 see Dwg. No. S48.

CAPITAL PLAZA OFFICE BUILDING

FRANKFORT, KENTUCKY

DRAWN BY	PARTIAL GROUND LEVEL PLAN	DATE 15 MAY 67
TRACED BY		SCALE 3/8"=1'-0"
CHECKED BY J.J	ARCHITECT EDWARD DURELL STONE, 7 EAST 67TH STREET, NEW YORK N.Y.	COMM. NO. 5006
SECTOR NO. C2	ASSOCIATE ARCHITECTS & ENGINEERS LEE POTTER SMITH & ASSOCIATES, 314 WILKINSON, FRANKFORT, KENTUCKY	DRAWING NO. S5 OF 71
	COMMONWEALTH OF KENTUCKY, DEPARTMENT OF FINANCE – ENGINEERING STAFF, FRANKFORT, KENTUCKY	

APPROVED BY ARCHITECT — DATE

APPROVED BY AGENCY HEAD W. F. McConnell — DATE

APPROVED BY OWNER — DATE

STATE OF KENTUCKY — RICHARD Q. PRAEGER No. 6175 REGISTERED PROFESSIONAL ENGINEER

PRAEGER-KAVANAGH-WATERBURY
STRUCTURAL-ENGINEERS

R.Q. PRAEGER, Partner

AS-BUILT DRAWINGS
DATE: JAN 78

CAP-81

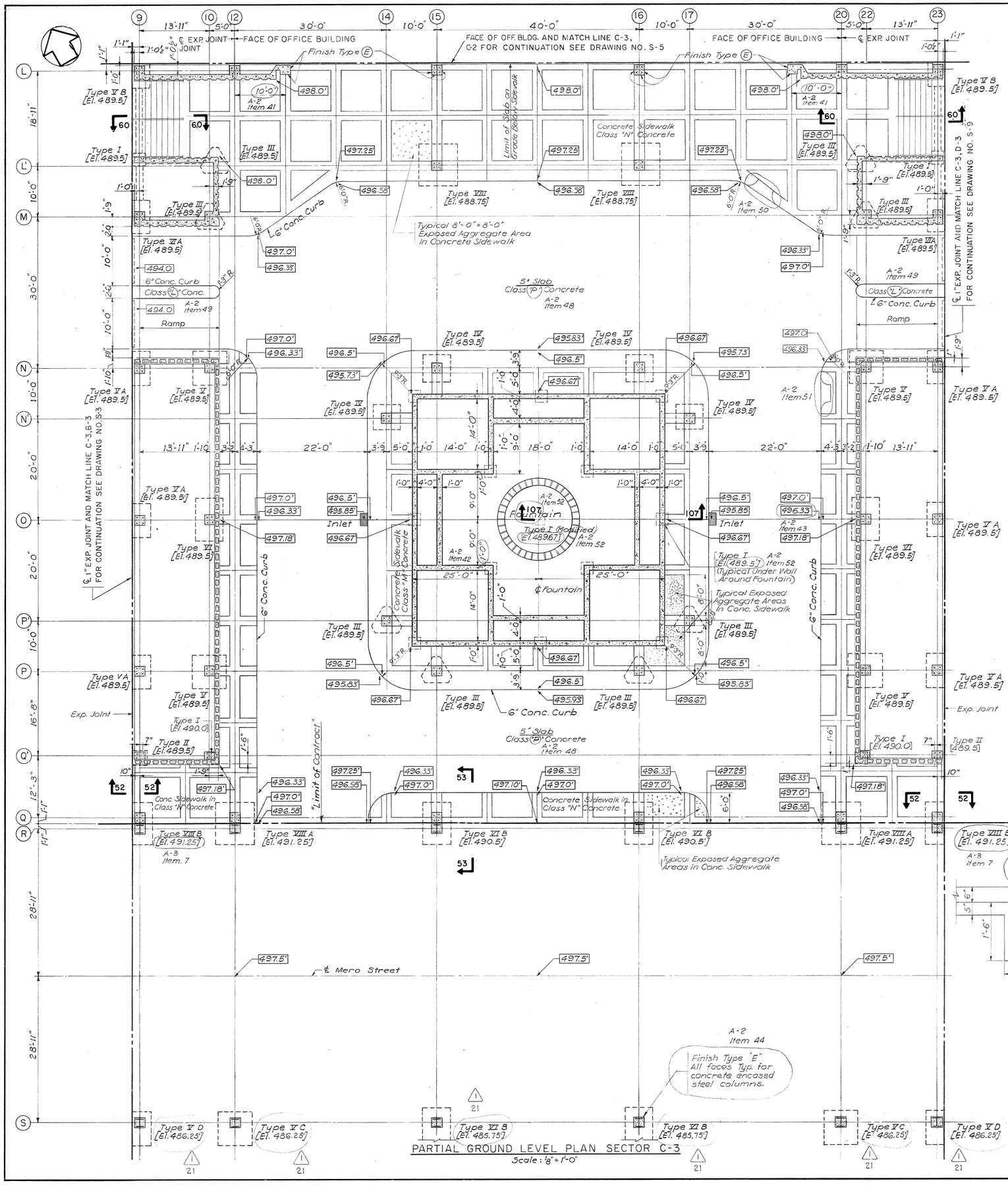

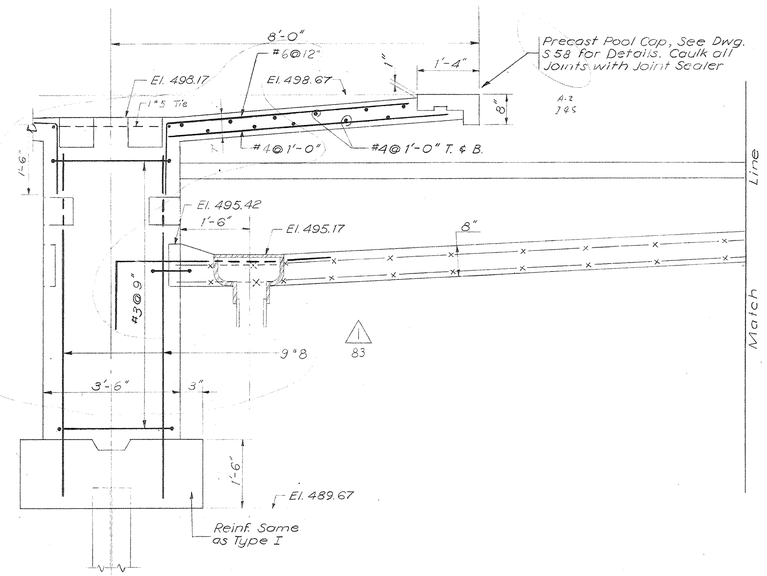

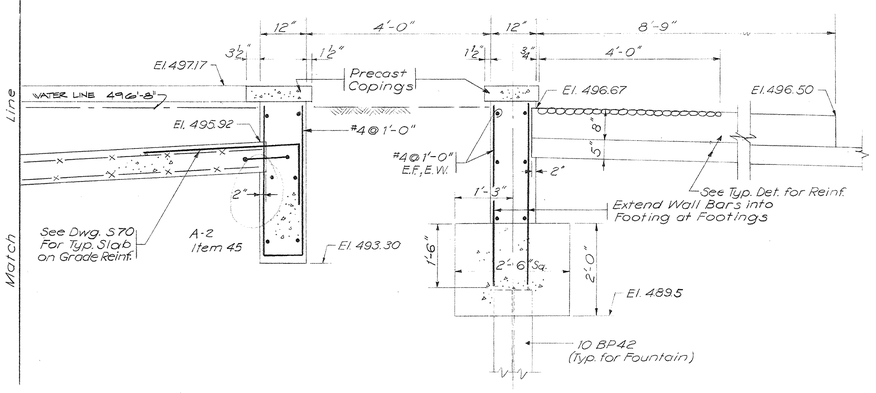

SECTION 107-107
Scale 3/4" = 1'-0"

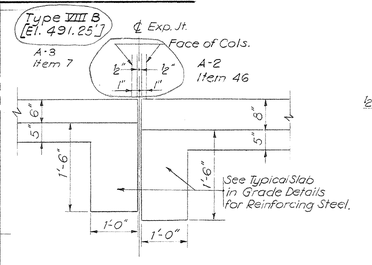

SECTION 52-52
Scale 3/4" = 1'-0"

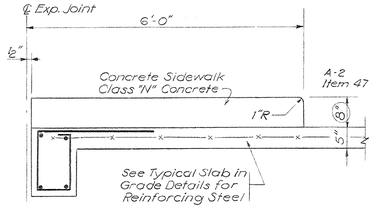

SECTION 53-53
Scale 3/4" = 1'-0"

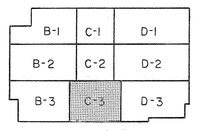

KEY PLAN
No Scale.

TPACINGS CONFORMED TO ADDENDA 11-1-67

Change Proposal No. 1
All circled areas noted thus △1 Item No.

AS-BUILT DRAWINGS
DATE: 1973
RUSS, CHERRY & CLEVENGER, INC.

STATE OF KENTUCKY
RICHARD Q. PRAEGER
No. 6175
REGISTERED PROFESSIONAL ENGINEER

PRAEGER-KAVANAGH-WATERBURY
STRUCTURAL-ENGINEERS
R.Q. PRAEGER, Partner

CAPITAL PLAZA OFFICE BUILDING
FRANKFORT, KENTUCKY

DRAWN BY	PARTIAL GROUND LEVEL PLAN	DATE 15 MAY 67
TRACED BY		SCALE AS NOTED
CHECKED BY	ARCHITECT EDWARD DURELL STONE 7 EAST 67TH STREET NEW YORK N.Y.	COMM. NO. 50066
SECTOR NO. C 3	ASSOCIATE ARCHITECTS & ENGINEERS LEE POTTER SMITH & ASSOCIATES 314 WILKINSON FRANKFORT, KENTUCKY	DRAWING NO. S 6
	COMMONWEALTH OF KENTUCKY DEPARTMENT OF FINANCE — ENGINEERING STAFF FRANKFORT, KENTUCKY	OF 71

APPROVED BY ARCHITECT — DATE
APPROVED BY AGENCY HEAD — DATE
APPROVED BY OWNER — DATE 24 MAY 67

CPA-82

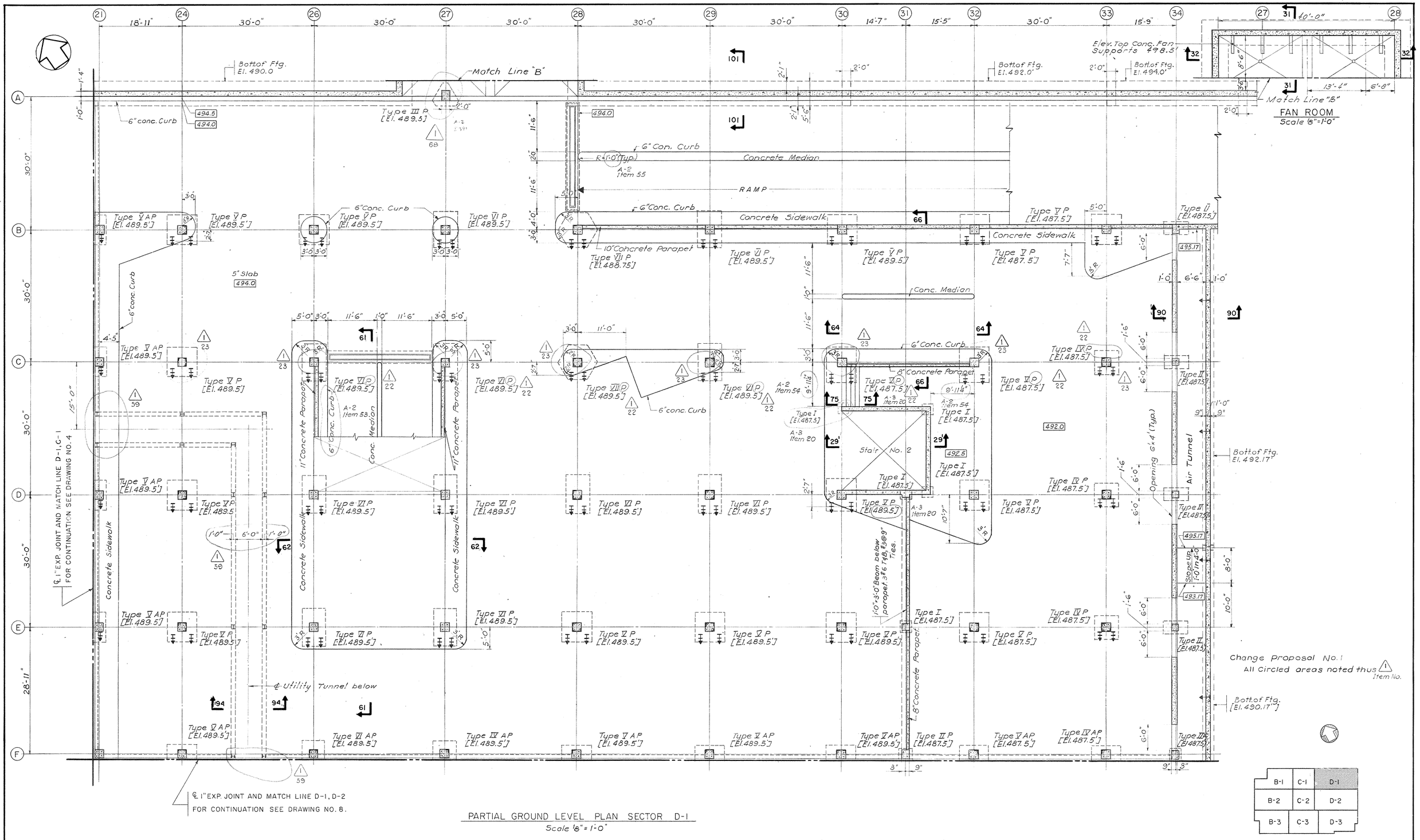

PARTIAL GROUND LEVEL PLAN SECTOR D-1
Scale 1/8"=1'-0"

B-1	C-1	D-1
B-2	C-2	D-2
B-3	C-3	D-3

KEY PLAN
No Scale

TRACINGS CONFORMED TO ADDENDA 11-1-67

CAPITAL PLAZA OFFICE BUILDING

FRANKFORT, KENTUCKY

DRAWN BY	PARTIAL GROUND LEVEL PLAN	DATE 15 MAY 67
TRACED BY		SCALE AS NOTED
CHECKED BY	ARCHITECT EDWARD DURELL STONE, 7 EAST 67TH STREET, NEW YORK N. Y.	COMM. NO. 50066
SECTOR NO. D1	ASSOCIATE ARCHITECTS & ENGINEERS LEE POTTER SMITH & ASSOCIATES, 314 WILKINSON, FRANKFORT, KENTUCKY	DRAWING NO. S 7
	COMMONWEALTH OF KENTUCKY DEPARTMENT OF FINANCE – ENGINEERING STAFF FRANKFORT, KENTUCKY	OF 71

AS-BUILT DRAWINGS

STATE OF KENTUCKY ★ RICHARD Q. PRAEGER No. 6175 REGISTERED PROFESSIONAL ENGINEER ★

PRAEGER-KAVANAGH-WATERBURY
STRUCTURAL-ENGINEERS
R.Q. PRAEGER, Partner

APPROVED BY _____ ARCHITECT DATE _____
APPROVED BY _____ AGENCY HEAD DATE _____
APPROVED BY _____ OWNER DATE 7th SEPTEMBER 1967

CPA-83

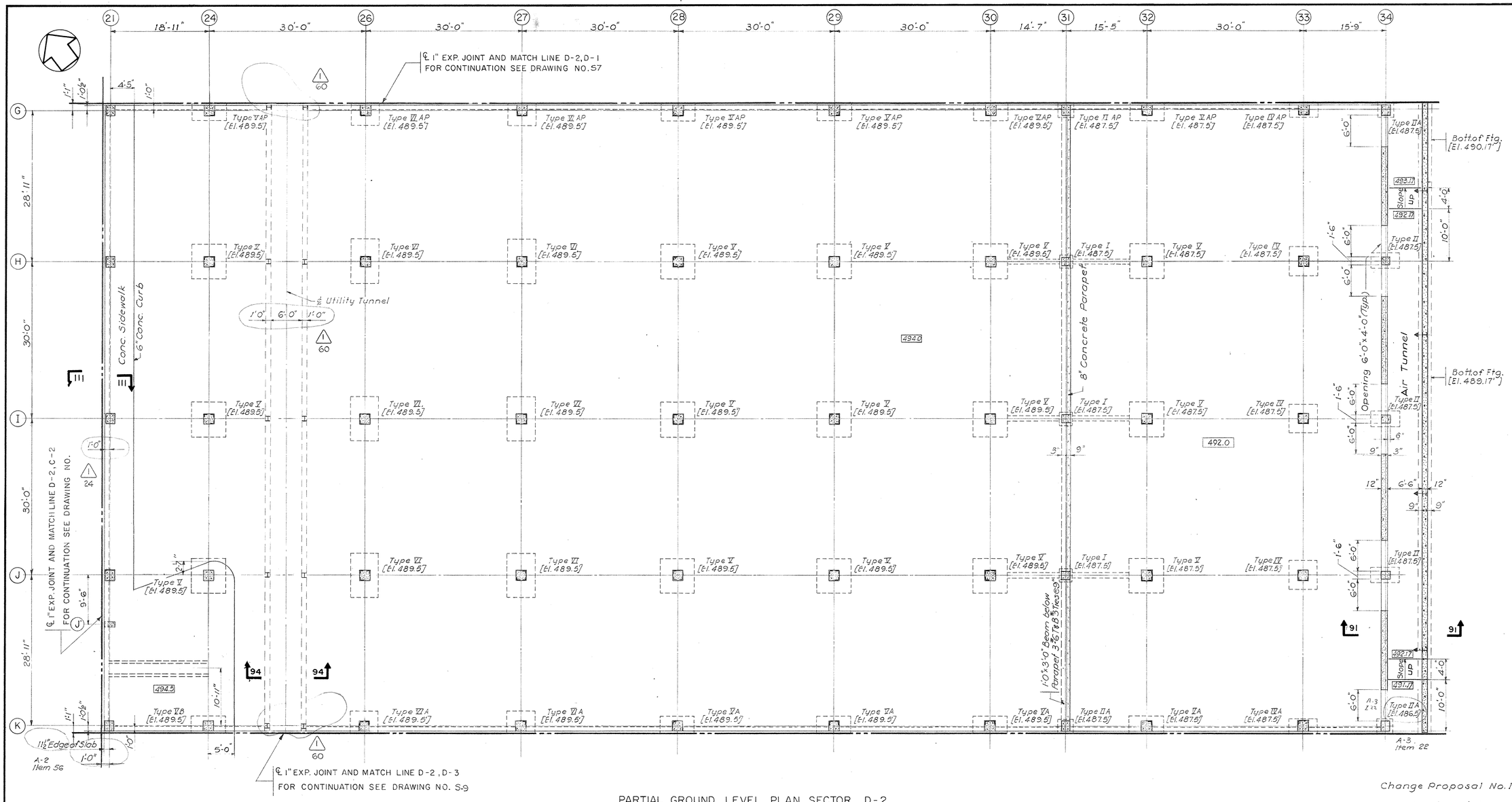

PARTIAL GROUND LEVEL PLAN SECTOR D-2

Scale 1/8" = 1'-0"

Change Proposal No. 1

All circled Areas noted thus (1) Item No.

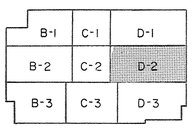

KEY PLAN

No Scale

TRACINGS CONFORMED TO ADDENDA 11-1-67

CAPITAL PLAZA OFFICE BUILDING

FRANKFORT, KENTUCKY

DRAWN BY	PARTIAL GROUND LEVEL PLAN	DATE 15 MAY 67
TRACED BY	ARCHITECT EDWARD DURELL STONE 7 EAST 67TH STREET NEW YORK N. Y.	SCALE AS NOTED
CHECKED BY J.E.		COMM. NO. 50066
SECTOR NO. D 2	ASSOCIATE ARCHITECTS & ENGINEERS LEE POTTER SMITH & ASSOCIATES 314 WILKINSON FRANKFORT, KENTUCKY	DRAWING NO. S 8
	COMMONWEALTH OF KENTUCKY DEPARTMENT OF FINANCE — ENGINEERING STAFF FRANKFORT, KENTUCKY	OF 71

APPROVED BY ARCHITECT DATE

APPROVED BY DATE

APPROVED BY OWNER DATE

STATE OF KENTUCKY RICHARD Q. PRAEGER No. 6175 REGISTERED PROFESSIONAL ENGINEER

PRAEGER-KAVANAGH-WATERBURY
STRUCTURAL-ENGINEERS

R. Q. PRAEGER, Partner

CPA-84

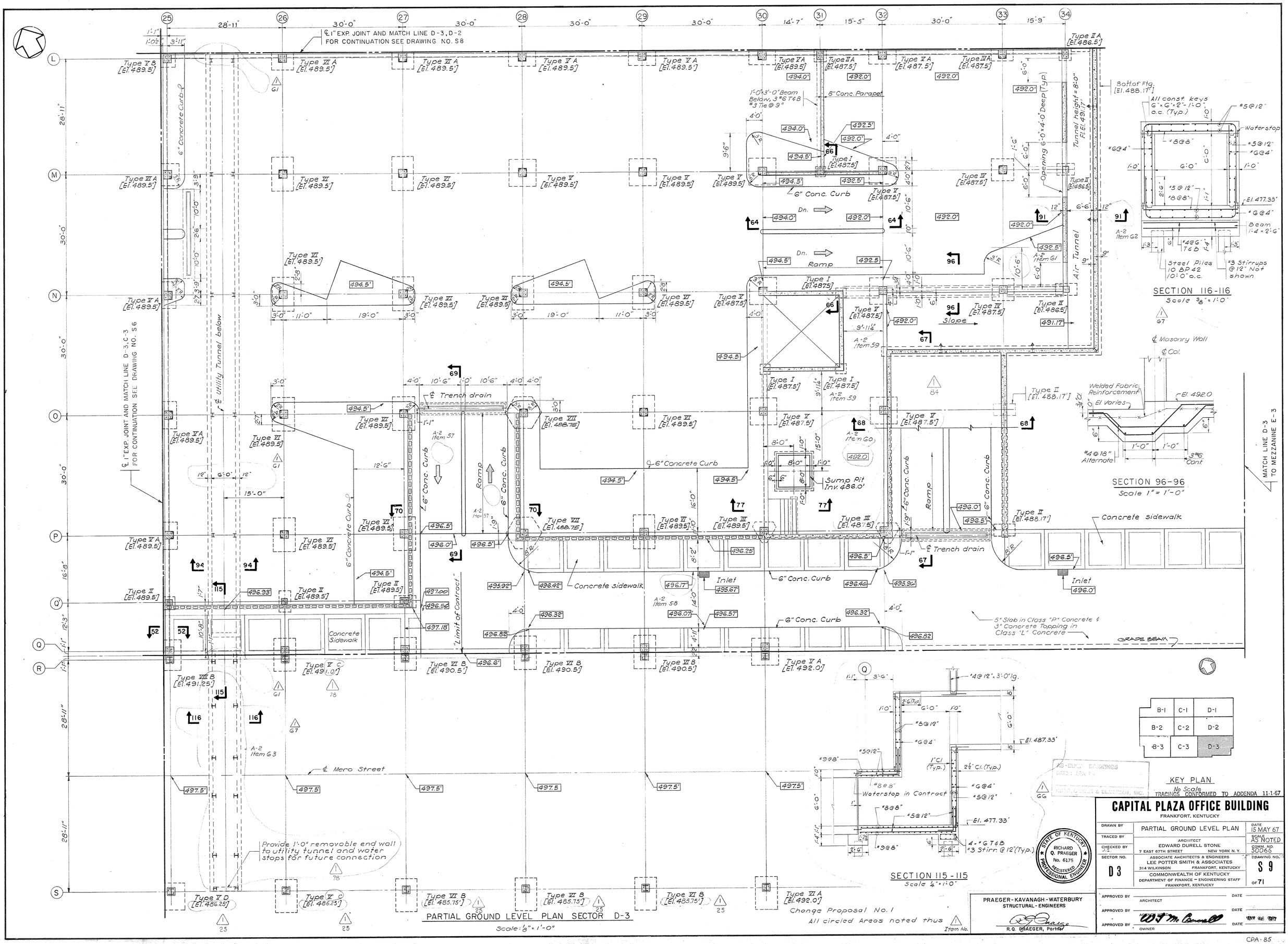

SECTION 116-116
Scale 3/8" = 1'-0"

SECTION 96-96
Scale 1" = 1'-0"

SECTION 115-115
Scale 1/4" = 1'-0"

PARTIAL GROUND LEVEL PLAN SECTOR D-3
Scale: 1/8" = 1'-0"

Change Proposal No. 1
All circled Areas noted thus 1 Item No.

B-1	C-1	D-1
B-2	C-2	D-2
B-3	C-3	D-3

KEY PLAN
No Scale
TRACINGS CONFORMED TO ADDENDA 11-1-67

AS-BUILT DRAWINGS
DATE: JAN 7 '71
HUNT, CONTRACTOR & BLACKBURN, INC.

STATE OF KENTUCKY
RICHARD Q. PRAEGER
No. 6175
REGISTERED PROFESSIONAL ENGINEER

PRAEGER-KAVANAGH-WATERBURY
STRUCTURAL-ENGINEERS
R.Q. PRAEGER, Partner

CAPITAL PLAZA OFFICE BUILDING
FRANKFORT, KENTUCKY

DRAWN BY	PARTIAL GROUND LEVEL PLAN	DATE 15 MAY 67
TRACED BY	ARCHITECT EDWARD DURELL STONE 7 EAST 67TH STREET NEW YORK N.Y.	SCALE AS NOTED
CHECKED BY J.L.		COMM. NO. 50066
SECTOR NO. D3	ASSOCIATE ARCHITECTS & ENGINEERS LEE POTTER SMITH & ASSOCIATES 314 WILKINSON FRANKFORT, KENTUCKY	DRAWING NO. S9
	COMMONWEALTH OF KENTUCKY DEPARTMENT OF FINANCE - ENGINEERING STAFF FRANKFORT, KENTUCKY	OF 71

APPROVED BY ARCHITECT DATE
APPROVED BY ASSOCIATE ARCHITECT DATE
APPROVED BY W. T. McDonnell OWNER DATE

CPA-85

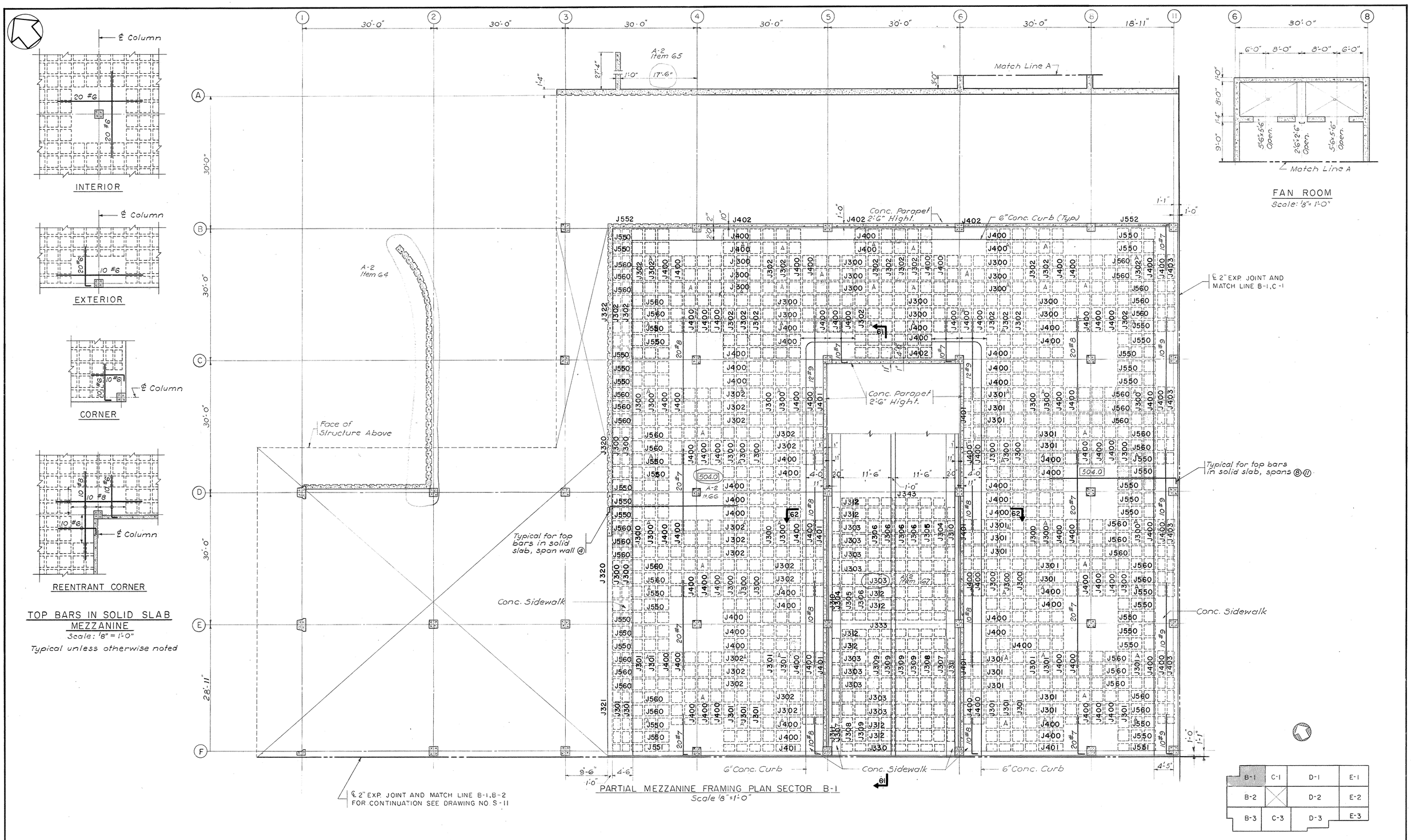

TRACINGS CONFORMED TO ADDENDA 11-1-67

CAPITAL PLAZA OFFICE BUILDING

FRANKFORT, KENTUCKY

DRAWN BY	PARTIAL MEZZANINE FRAMING PLAN	DATE 15 MAY 67
TRACED BY	ARCHITECT EDWARD DURELL STONE 7 EAST 67TH STREET NEW YORK N. Y.	SCALE AS NOTED
CHECKED BY J.Z.		COMM. NO. 50066
SECTOR NO. B 1	ASSOCIATE ARCHITECTS & ENGINEERS LEE POTTER SMITH & ASSOCIATES 314 WILKINSON FRANKFORT, KENTUCKY	DRAWING NO. S 10 OF 71
	COMMONWEALTH OF KENTUCKY DEPARTMENT OF FINANCE — ENGINEERING STAFF FRANKFORT, KENTUCKY	

STATE OF KENTUCKY RICHARD Q. PRAEGER No. 6175 REGISTERED PROFESSIONAL ENGINEER

PRAEGER-KAVANAGH-WATERBURY
STRUCTURAL-ENGINEERS
R.Q. PRAEGER, Partner

APPROVED BY ARCHITECT DATE
APPROVED BY CONSULTANT DATE
APPROVED BY OWNER DATE MAY 26 1967

CPA-86

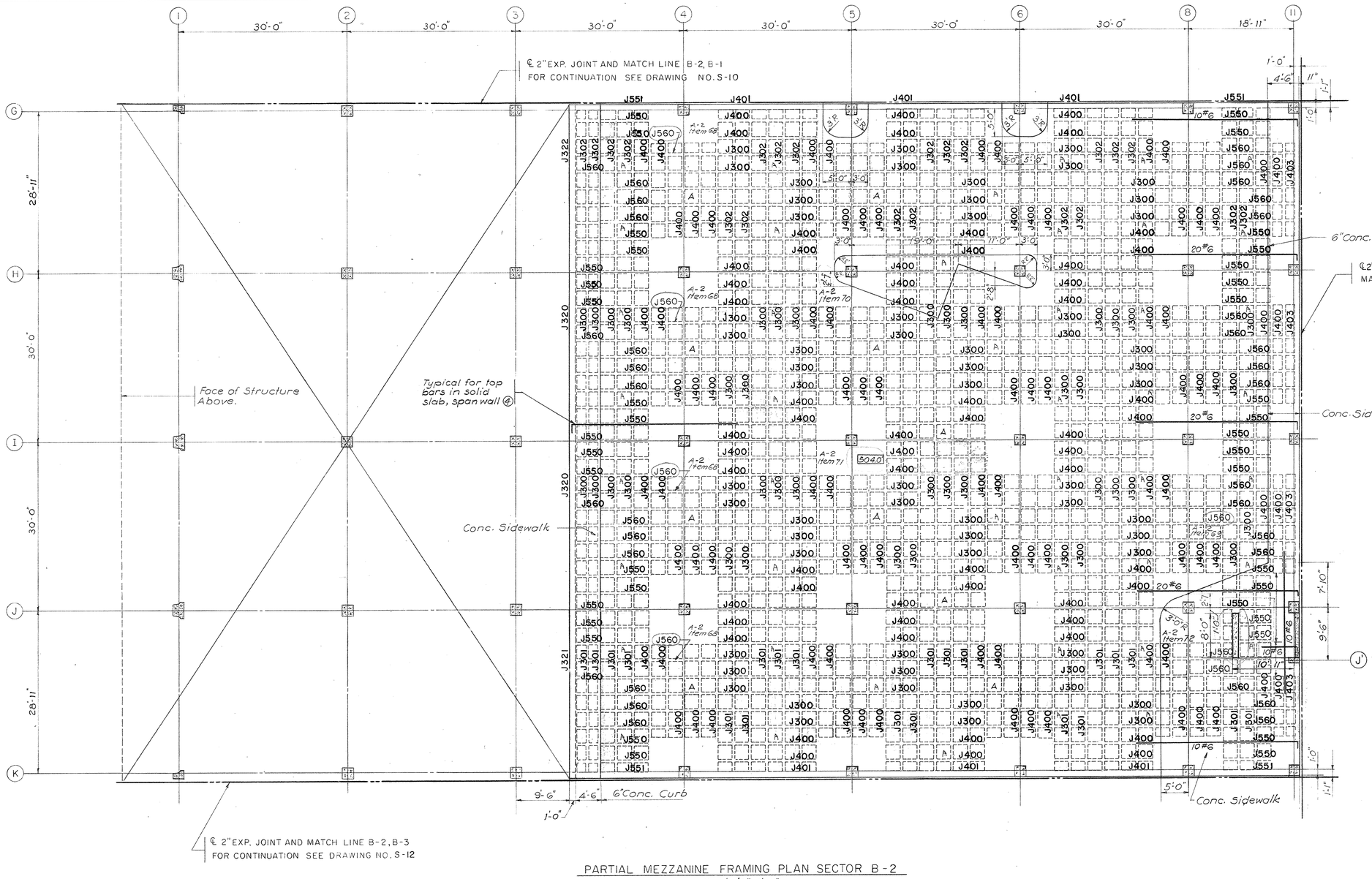

PARTIAL MEZZANINE FRAMING PLAN SECTOR B-2
Scale 1/8"=1'-0"

Note:
For typical top reinforcement in solid slab, see Dwg. No. S10

B-1	C-1	D-1	E-1
B-2	C-2	D-2	E-2
B-3	C-3	D-3	E-3

KEY PLAN
No Scale
TRACINGS CONFORMED TO ADDENDA 11-1-67

STATE OF KENTUCKY
RICHARD Q. PRAEGER
No. 6175
REGISTERED PROFESSIONAL ENGINEER

PRAEGER-KAVANAGH-WATERBURY
STRUCTURAL-ENGINEERS
R.Q. PRAEGER, Partner

CAPITAL PLAZA OFFICE BUILDING
FRANKFORT, KENTUCKY

DRAWN BY	PARTIAL MEZZANINE FRAMING PLAN	DATE 15 MAY 67
TRACED BY		SCALE AS NOTED
CHECKED BY J.J.	ARCHITECT EDWARD DURELL STONE 7 EAST 67TH STREET NEW YORK N.Y.	COMM. NO. 5006
SECTOR NO. B 2	ASSOCIATE ARCHITECTS & ENGINEERS LEE POTTER SMITH & ASSOCIATES 314 WILKINSON FRANKFORT, KENTUCKY	DRAWING NO. S 11
	COMMONWEALTH OF KENTUCKY DEPARTMENT OF FINANCE - ENGINEERING STAFF FRANKFORT, KENTUCKY	OF 71

APPROVED BY ARCHITECT DATE
APPROVED BY DATE
APPROVED BY OWNER DATE MAY 24 1967

CPA-87

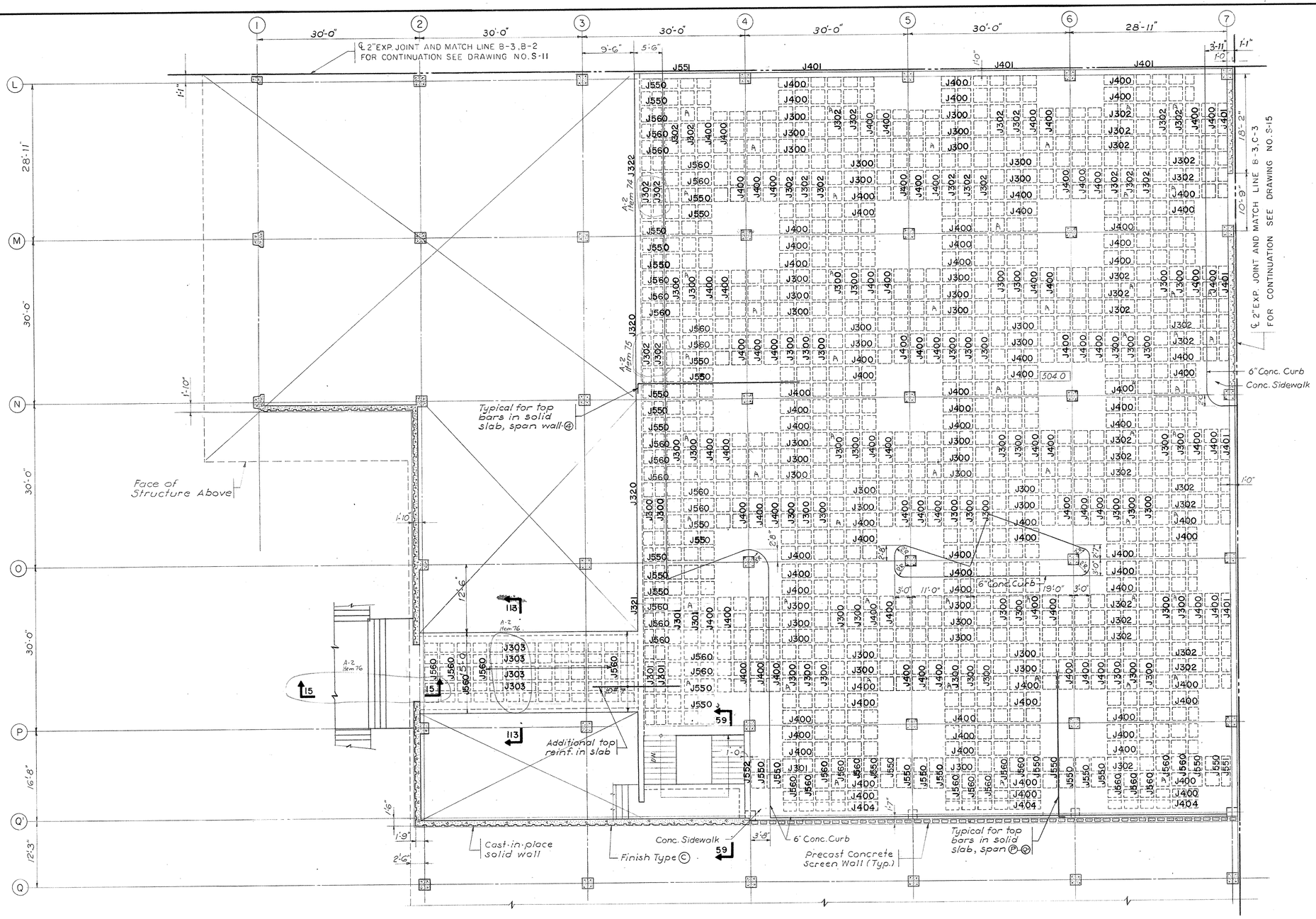

PARTIAL MEZZANINE FRAMING PLAN SECTOR B-3
Scale 1/8"=1'-0"

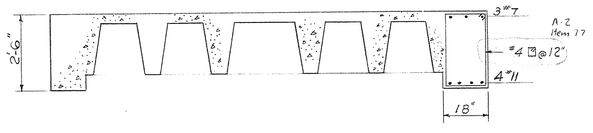

SECTION 113-113
Scale 1/2"=1'-0"

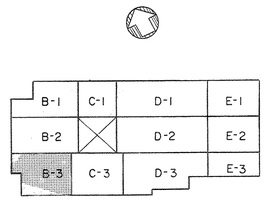

KEY PLAN
No Scale

Note:
For typical top reinforcement in solid slab, see Dwg. No. S10

TRACINGS CONFORMED TO ADDENDA 11-1-67

CAPITAL PLAZA OFFICE BUILDING
FRANKFORT, KENTUCKY

DRAWN BY	PARTIAL MEZZANINE FRAMING PLAN	DATE 15 MAY 67
TRACED BY	ARCHITECT EDWARD DURELL STONE 7 EAST 67TH STREET NEW YORK N. Y.	SCALE AS NOTED
CHECKED BY J.I.		COMM. NO. 50066
SECTOR NO. B 3	ASSOCIATE ARCHITECTS & ENGINEERS LEE POTTER SMITH & ASSOCIATES 314 WILKINSON FRANKFORT, KENTUCKY	DRAWING NO. S 12 OF 71
	COMMONWEALTH OF KENTUCKY DEPARTMENT OF FINANCE – ENGINEERING STAFF FRANKFORT, KENTUCKY	

STATE OF KENTUCKY RICHARD Q. PRAEGER No. 6175 REGISTERED PROFESSIONAL ENGINEER

PRAEGER-KAVANAGH-WATERBURY
STRUCTURAL-ENGINEERS
R. Q. PRAEGER, Partner

APPROVED BY ARCHITECT DATE
APPROVED BY ENGINEER DATE
APPROVED BY OWNER DATE

CPA-88

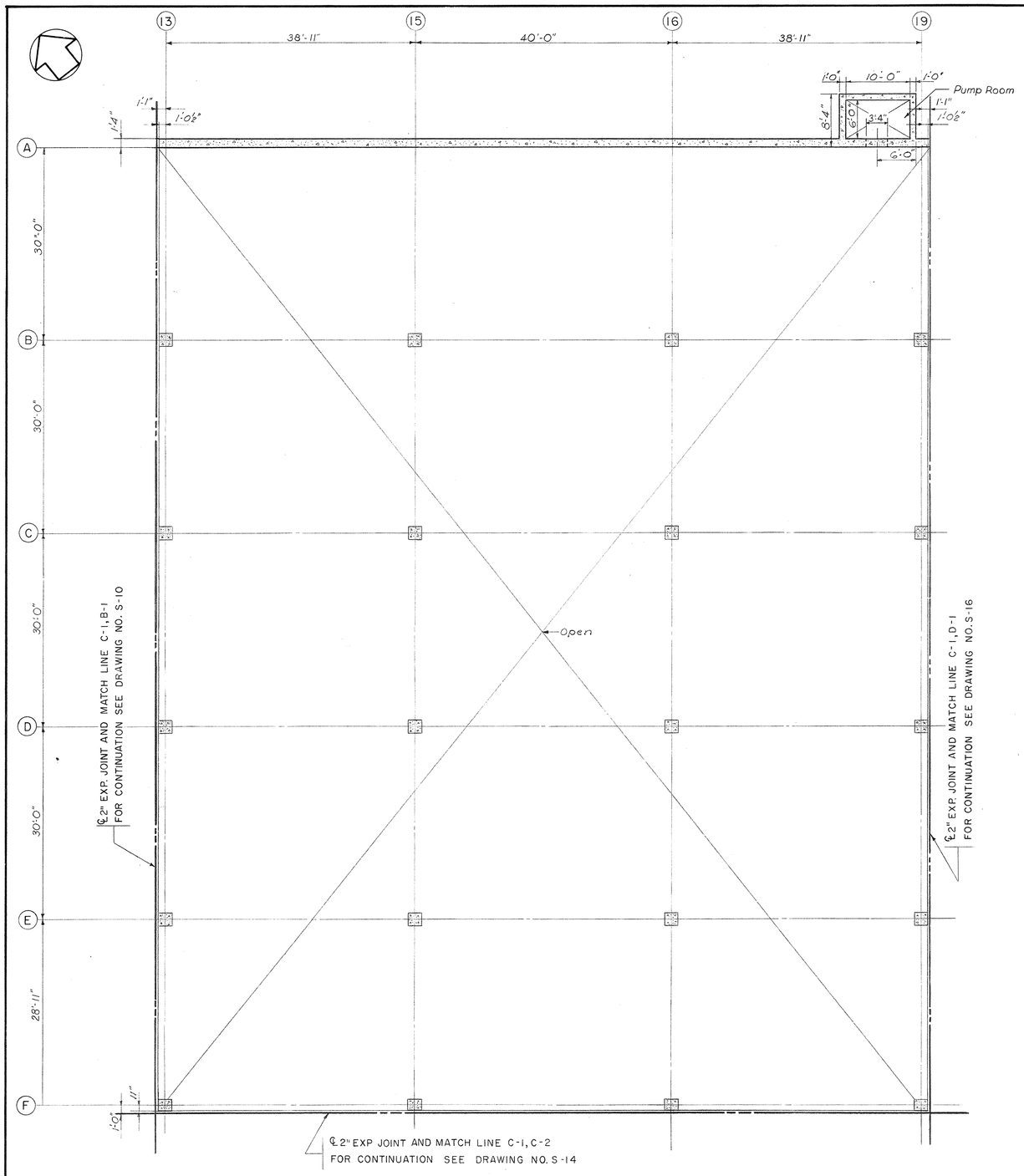

PARTIAL MEZZANINE FRAMING PLAN SECTOR C-1

Scale 1/8" = 1'-0"

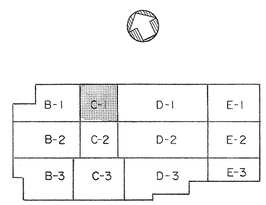

KEY PLAN

No Scale

STATE OF KENTUCKY
RICHARD Q. PRAEGER
No. 6175
REGISTERED PROFESSIONAL ENGINEER

AS-BUILT DRAWINGS
DATE 11-1-67
WITH CHANGES & CORRECTIONS, INC.

PRAEGER-KAVANAGH-WATERBURY
STRUCTURAL-ENGINEERS
R.Q. PRAEGER, Partner

CAPITAL PLAZA OFFICE BUILDING

FRANKFORT, KENTUCKY

DRAWN BY	PARTIAL MEZZANINE FRAMING PLAN	DATE 15 MAY 67
TRACED BY		SCALE AS NOTED
CHECKED BY J.L.	ARCHITECT EDWARD DURELL STONE 7 EAST 67TH STREET NEW YORK N. Y.	COMM. NO. 50066
SECTOR NO. C1	ASSOCIATE ARCHITECTS & ENGINEERS LEE POTTER SMITH & ASSOCIATES 314 WILKINSON FRANKFORT, KENTUCKY	DRAWING NO. S 13
	COMMONWEALTH OF KENTUCKY DEPARTMENT OF FINANCE – ENGINEERING STAFF FRANKFORT, KENTUCKY	OF 71

APPROVED BY _____ ARCHITECT DATE _____

APPROVED BY _____ DATE _____

APPROVED BY _____ AGENCY HEAD DATE _____

APPROVED BY _____ OWNER DATE _____

CPA-89

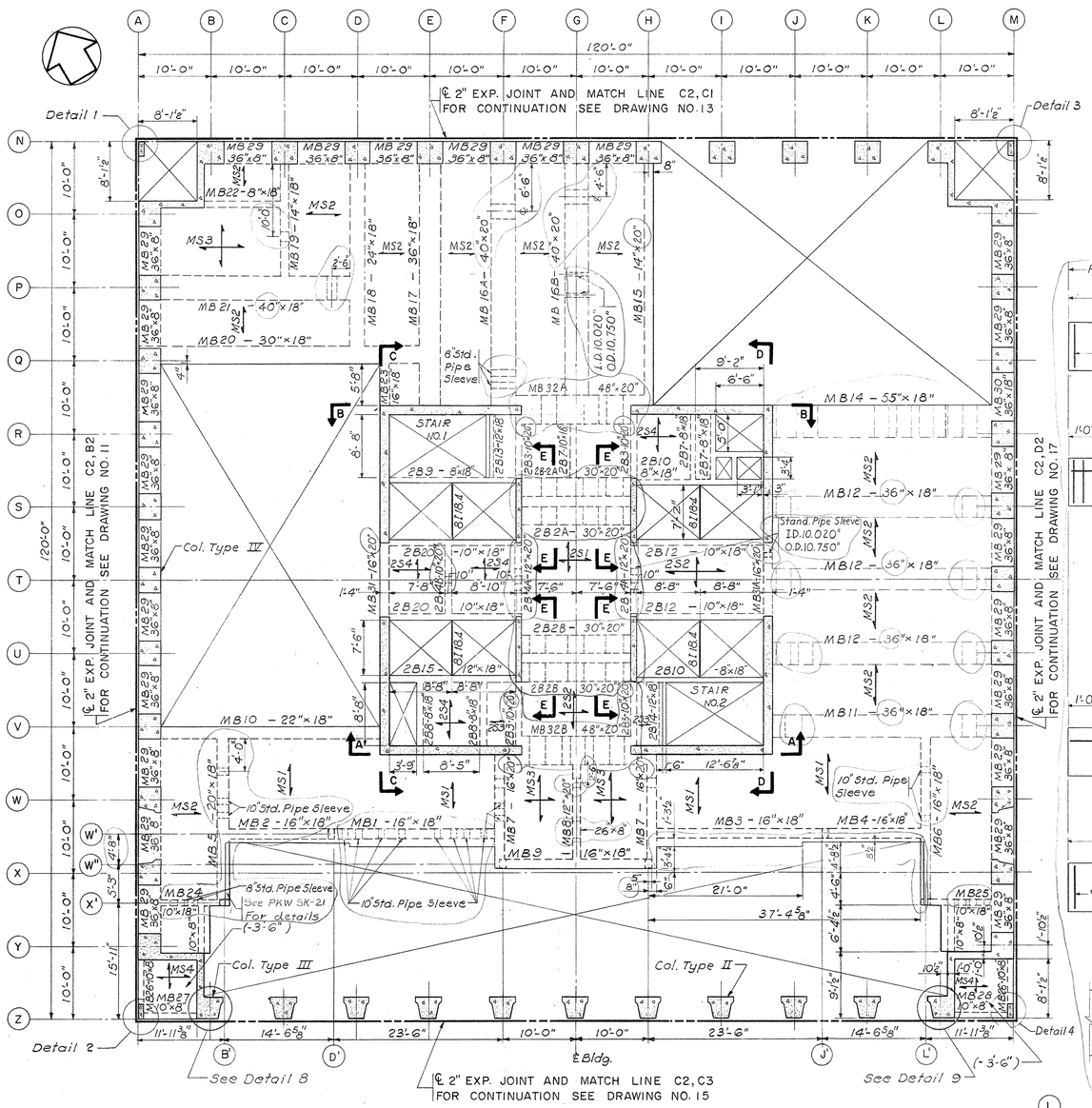

SLAB SCHEDULE

MARK	SIZE	TOP STEEL LW	TOP STEEL SW	BOTTOM STEEL LW	BOTTOM STEEL SW	REMARKS
MS1	4"	#3@12"	#4@8"	#3@12"	#5@6"	
MS2	4"	#3@12"	#3@8"	#3@12"	#4@8"	
MS3	4"	#4@12"	#4@12"	#4@12"	#4@10"	
MS4	4"	#3@12"	#3@8"	#3@12"	#3@8"	

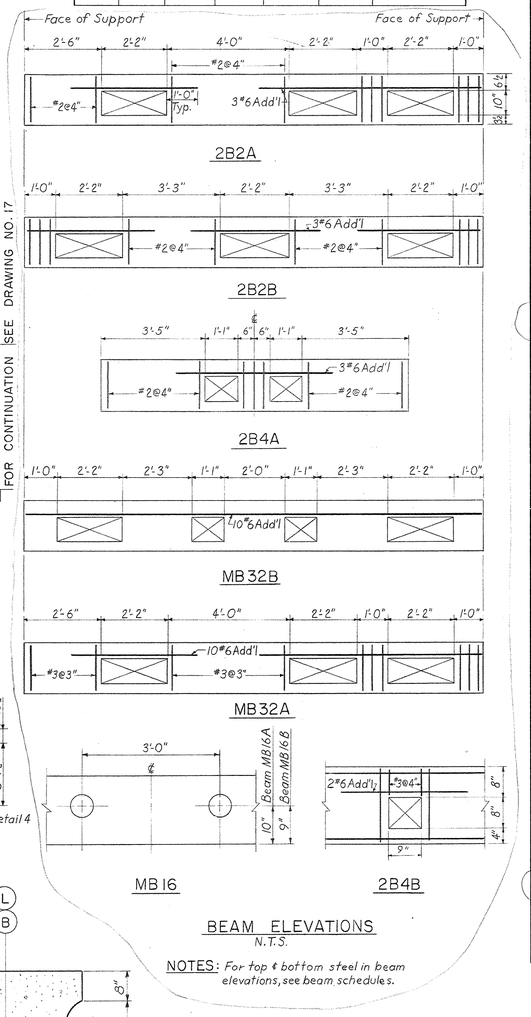

BEAM ELEVATIONS
N.T.S.

NOTES: For top & bottom steel in beam elevations, see beam schedules.

MEZZANINE BEAM SCHEDULE

MARK	SIZE	STEEL	LOCATION	FACE WEST OR SOUTH SUPPORT	FACE EAST OR NORTH SUPPORT	STIRRUPS OR TIES SIZE & SPACING	STIRRUPS OR TIES TYPE	REMARKS
MB1	16"×18"	2-#8	Top	4'-0"	22'-5"	#4 @ 3"		MB3 opposite hand.
MB3		3-#9	Bot.	10"	1'-2"	#3 @ 8"		
MB2	16"×18"	2-#8	Top	1'-2"	13'-0 5/8"	#3 @ 8"		MB4 opposite hand.
MB4		3-#9	Bot.	1'-2"	10"			
MB5	20"×18"	3-#8	Top	8" 2'-6"		#4 @ 6"		
MB6	16"×18"	4-#9	Bot.	8"	MB5 - 21'-10" MB6 - 22'-9"			
MB7	16"×20"	2-#6	Top	1'-6"	14'-2" 1'-6"	#4 @ 4"		
		1-#6	Top	1'-2" 1'-6"	1'-2"			
		3-#8	Bot.	1'-2"	14'-2" 1'-2"			
MB8	12"×18"	2-#6	Top	1'-6"		#3 @ 3"		
		2-#8	Bot.	1'-2" 1'-2"	14'-2" 1'-2"			
MB9	16"×18"	2-#8	Top	2'-3"	2'-5"	#3 @ 8"		
		3-#9	Bot.	11" 11"	19'-6" 11" 11"			
MB10	22"×18"	6-#8	Top	1'-0"	2'-0"	#4 @ 8"		MB11 opposite hand.
MB11	36"×18"	6-#10	Bot.	2'-6" 2'-0"	30'-0" 1'-2" 2'-0"	#2 @ 8"		
MB12	36"×18"	4-#8	Top	2'-0"	1'-0"	#2 @ 8"		
		5-#10	Bot.	1'-2" 1'-2"	30'-0" 2'-6" 2'-0"			
MB15	14" × Varies	3-#8	Top	2'-0"	1'-0"	#4 @ 8"		
		4-#10	Bot.	1'-2" 1'-2"	MB13 30'-0" MB15 33'-0" 2'-6" 2'-0"			
MB14	55"×18"	6-#8	Top	1'-6"	1'-0"	#2 @ 8"		
		6-#10	Bot.	1'-2" 1'-2"	30'-0" 2'-6" 2'-0"			
MB16A	40"×20"	6-#7	Top	2'-0"	2'-0"	#3 @ 6"		
MB16B	40"×20"	6-#10	Bot.	1'-2" 1'-2"	33'-0" 2'-6" 2'-0"			
MB17	36"×18"	10-#7	Top	2'-0"	2'-0"	#4 @ 8"		
		10-#10	Bot.	1'-2" 1'-2"	33'-0" 2'-6" 2'-0"			
MB18	24"×18"	6-#7	Top	1'-0"		#3 @ 7"		
		6-#10	Bot.	2'-3" 2'-0"	24'-10" 2'-6" 2'-0"			
MB19	14"×18"	2-#6	Top	1'-0"		#3 @ 8"		
		2-#9	Bot.	1'-6" 1'-6"	16'-2" 2'-6" 2'-0"			
MB20	30"×18"	6-#7	Top	1'-0"		#3 @ 7"		
		6-#10	Bot.	2'-6" 2'-0"	26'-0" 2'-10" 2'-0"			
MB21	40"×18"	4-#7	Top	1'-0"		#3 @ 6"		
		4-#10	Bot.	2'-6" 2'-0"	26'-0" 1'-10" 1'-6"			
MB22	8"×18"	2-#5	Top	2'-0"	10'-3 1/2" 1'-0"	#3 @ 8"		
		2-#8	Bot.	1'-0"	1'-0"			
MB23	16"×18"	3-#8	Top	3'-0"	5'-8" 2'-3"	#3 @ 8"		
		3-#8	Bot.	2'-0"	2'-0"			
MB24	10"×18"	2-#5	Top	1'-6"		#3 @ 8" #2 @ 4'		MB25 opposite hand
MB25		2-#8	Bot.	2'-0" 2'-0"	8'-3 3/8" 1'-2" 1'-2"			
MB26	10"×8"	2-#5	Top	1'-6"		#3 @ 8"		
		2-#8	Bot.	1'-2" 1'-2"	6'-0 1/2" 2'-0" 2'-0"			
MB27	10"×8"	2-#5	Top	1'-6"		#3 @ 8"		MB 28 opposite hand
MB28		2-#8	Bot.	1'-2"	7'-3 1/2" 2'-0" 2'-0"			
MB29	36"×8"	6-#8	Top	3'-0"	6'-7" 3'-0"	#4 @ 8"		
MB30	36"×16"	6-#8	Bot.	2'-4"	2'-4"			
MB31A MB31	16×20"	3-#10 4-#10	Top Bot	4'-0" 1'-0"	10'-0" 4'-0" 1'-0"	#4 @ 4" #4 @ 6"		
MB32	48"×20"	9-#7 18-#7	Top Bot.	* 4'-0" 1'-0"	4'-0" 1'-0"	#3 @ 3"		

* Bend or dowel top steel where necessary

PARTIAL MEZZANINE FRAMING PLAN SECTOR C-2

DATUM - TOP OF FINISHED FLOOR ELEV. 508'-0"
Scale: 1/8" = 1'-0"

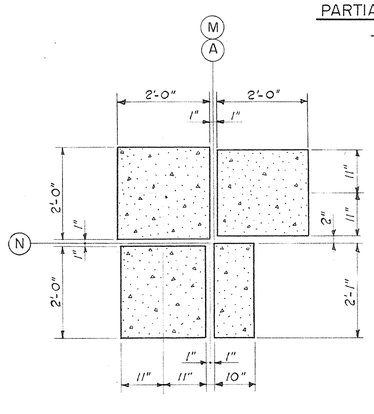

DETAIL - 1
DETAIL - 3 (OPP. HAND)
Scale: 3/4" = 1'-0"

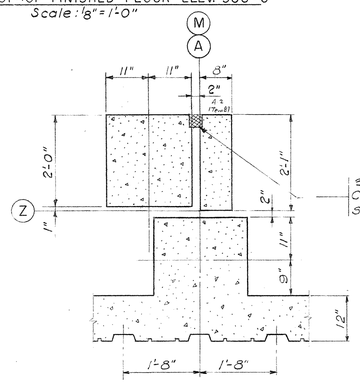

DETAIL - 2
DETAIL - 4 (OPP. HAND)
Scale: 3/4" = 1'-0"

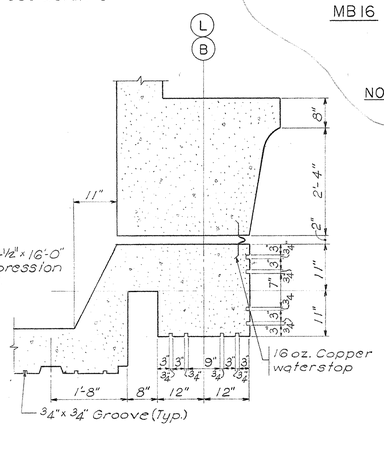

DETAIL - 8
DETAIL - 9 (OPP. HAND)
Scale: 3/4" = 1'-0"

NOTES

1. For General Notes and Typical Details, Dwg. No. S57.
2. For Column Schedule and Corner Wall Details, see Dwg. No. S52.
3. For Stairs No.1 & No.2, see Dwg. No. S55.
4. For Sections A-A, B-B, C-C, D-D and E-E see Dwg. No. S56.
5. The top of the structural slab is (-1 3/4") unless otherwise noted.
6. All concrete slabs are 4" thick unless otherwise noted.
7. For core beams and slab schedule see Dwg. No. S46.
8. For additional steel at beam openings see Dwg. No. S49.

LOAD SCHEDULE

Dead Load *	
4" Slab	39 psf
1 3/4" Terrazzo	24 psf
Hung Ceiling	10 psf
Mechanical	5 psf
	78 psf
Live Load	100 psf

* Beams & Partitions included separately

B-1	C-1	D-1	E-1
B-2	C-2	D-2	E-2
B-3	C-3	D-3	E-3

KEY PLAN
No Scale

TRACINGS CONFORMED TO ADDENDA 11-1-67

CAPITAL PLAZA OFFICE BUILDING

FRANKFORT, KENTUCKY

DRAWN BY	PARTIAL MEZZANINE FRAMING PLAN	DATE 15 MAY 67
TRACED BY	ARCHITECT EDWARD DURELL STONE 7 EAST 67TH STREET NEW YORK N.Y.	SCALE AS NOTED
CHECKED BY J.P.L.		COMM. NO. 50060
SECTOR NO. C2	ASSOCIATE ARCHITECTS & ENGINEERS LEE POTTER SMITH & ASSOCIATES 314 WILKINSON FRANKFORT, KENTUCKY	DRAWING NO. S 14
	COMMONWEALTH OF KENTUCKY DEPARTMENT OF FINANCE — ENGINEERING STAFF FRANKFORT, KENTUCKY	OF 71

APPROVED BY _____ ARCHITECT DATE _____
APPROVED BY _____ AGENCY HEAD DATE _____
APPROVED BY _____ OWNER DATE MAY 15 1967

STATE OF KENTUCKY — RICHARD Q. PRAEGER No. 6175 — REGISTERED PROFESSIONAL ENGINEER

PRAEGER-KAVANAGH-WATERBURY
STRUCTURAL-ENGINEERS
R.Q. PRAEGER, Partner

AS-BUILT CORRECTIONS
BY [illegible]
KING, KEITH & BLANKENSHIP, INC.

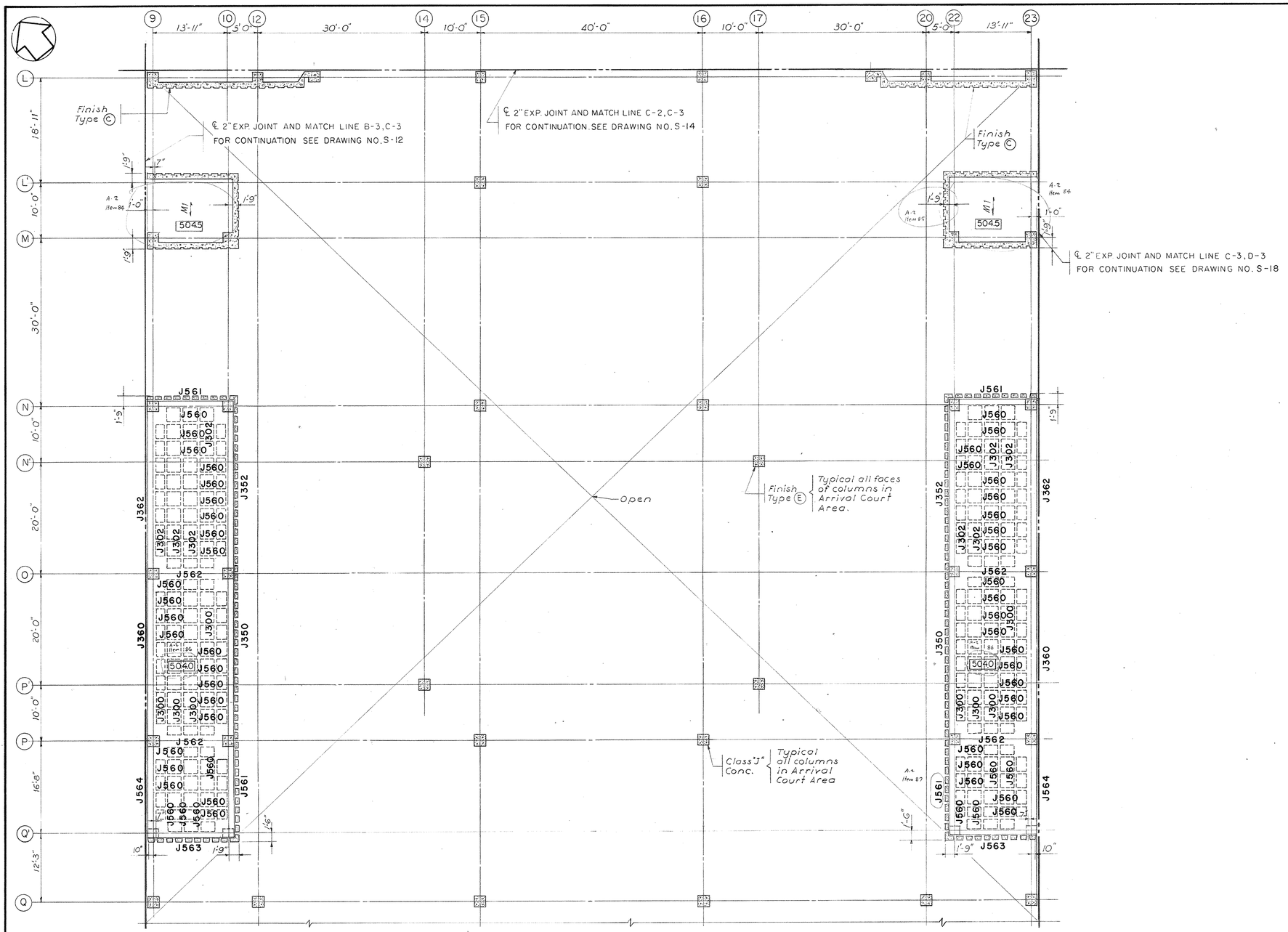

PARTIAL MEZZANINE FRAMING PLAN SECTOR C-3

Scale 1/8"=1'-0"

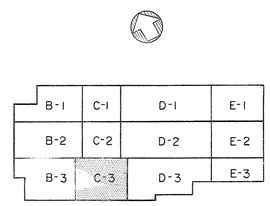

KEY PLAN

No Scale

TRACINGS CONFORMED TO ADDENDA 11-1-67

CAPITAL PLAZA OFFICE BUILDING

FRANKFORT, KENTUCKY

DRAWN BY	PARTIAL MEZZANINE FRAMING PLAN	DATE 15 MAY 67
TRACED BY		SCALE AS NOTED
CHECKED BY ✓ℓ	ARCHITECT EDWARD DURELL STONE, 7 EAST 67TH STREET, NEW YORK N. Y.	COMM. NO. 50066
SECTOR NO. C 3	ASSOCIATE ARCHITECTS & ENGINEERS LEE POTTER SMITH & ASSOCIATES, 314 WILKINSON, FRANKFORT, KENTUCKY	DRAWING NO. S 15
	COMMONWEALTH OF KENTUCKY, DEPARTMENT OF FINANCE - ENGINEERING STAFF, FRANKFORT, KENTUCKY	OF 71

STATE OF KENTUCKY — RICHARD Q. PRAEGER — No. 6175 — REGISTERED PROFESSIONAL ENGINEER

PRAEGER-KAVANAGH-WATERBURY
STRUCTURAL-ENGINEERS
R.Q. PRAEGER, Partner

APPROVED BY _____ ARCHITECT DATE _____

APPROVED BY _____ AGENCY HEAD DATE _____

APPROVED BY _____ OWNER DATE _____

AS-BUILT DRAWING
DATE: MAR 75
SUBMITTED BY: KENTUCKY, INC.

CPA-91

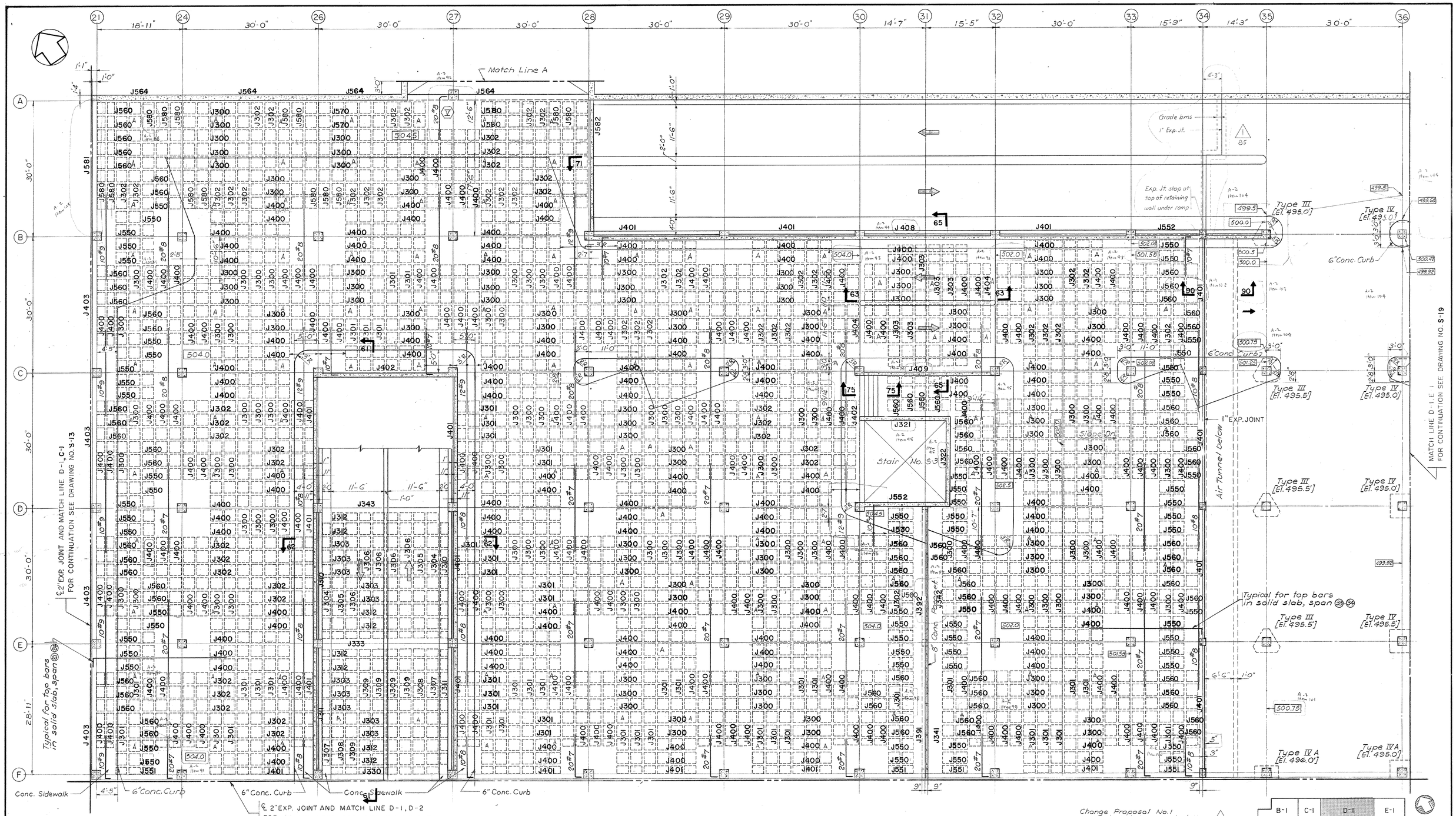

PARTIAL MEZZANINE FRAMING PLAN SECTOR D - 1

Scale 8"=1'-0"

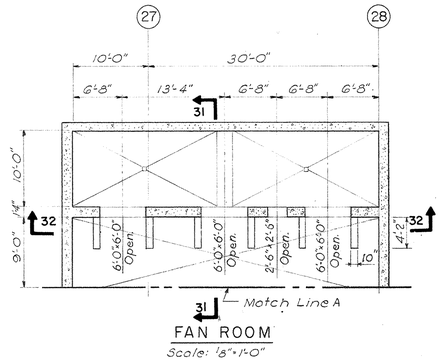

FAN ROOM

Scale: 1/8"=1'-0"

Change Proposal No.1
All Circled Areas noted thus (1) Item No.

B-1	C-1	D-1	E-1
B-2	C-2	D-2	E-2
B-3	C-3	D-3	E-3

KEY PLAN

No Scale

Note:
For typical top reinforcement in solid slab, see Dwg. No. S10

TRACINGS CONFORMED TO ADDENDA 11-1-67

CAPITAL PLAZA OFFICE BUILDING

FRANKFORT, KENTUCKY

DRAWN BY	PARTIAL MEZZANINE FRAMING PLAN	DATE 15 MAY 67
TRACED BY		SCALE AS NOTED
CHECKED BY J.L.	ARCHITECT EDWARD DURELL STONE 7 EAST 67TH STREET NEW YORK N. Y.	COMM. NO. 50066
SECTOR NO. D1	ASSOCIATE ARCHITECTS & ENGINEERS LEE POTTER SMITH & ASSOCIATES 314 WILKINSON FRANKFORT, KENTUCKY	DRAWING NO. S 16
	COMMONWEALTH OF KENTUCKY DEPARTMENT OF FINANCE — ENGINEERING STAFF FRANKFORT, KENTUCKY	OF 71

STATE OF KENTUCKY — RICHARD Q. PRAEGER No. 6175 — REGISTERED PROFESSIONAL ENGINEER

AS-BUILT DRAWING

PRAEGER-KAVANAGH-WATERBURY
STRUCTURAL-ENGINEERS
R.Q. PRAEGER, Partner

APPROVED BY ARCHITECT DATE

APPROVED BY DATE

APPROVED BY OWNER DATE NOV 24 1967

CPA-92

℄ 2" EXP. JOINT AND MATCH LINE D-2, D-1
FOR CONTINUATION SEE DRAWING NO. S 16.

℄ 2" EXP JOINT AND MATCH LINE D-2, C-2
FOR CONTINUATION SEE DRAWING NO. S 14.

MATCH LINE D-2, E-2
FOR CONTINUATION SEE DRAWING NO. S 20.

℄ 2" EXP. JOINT AND MATCH LINE D-2, D-3
FOR CONTINUATION SEE DRAWING NO. S 18.

Conc. Sidewalk

6" Conc. Curb

Type II A (El. 496.0')

Type III A (El. 495.0')

Type III (El. 496.0')

Type IV (El. 495.0')

Type IV A (El. 495.0')

Air Tunnel below

Typical for top bars in solid slab, span 33-34

2" EXP. JOINT

1" EXP. JOINT

PARTIAL MEZZANINE FRAMING PLAN SECTOR D-2

Scale 1/8" = 1'-0"

B-1	C-1	D-1	E-1
B-2	C-2	D-2	E-2
B-3	C-3	D-3	E-3

KEY PLAN

No Scale

TRACINGS CONFORMED TO ADDENDA 11-1-67

Note:
For typical top reinforcement in solid slab, see Dwg. No. S 10

AS BUILT DRAWINGS
DATE JAN 27
KIDDE CONSULTANTS, INC.

STATE OF KENTUCKY
RICHARD Q. PRAEGER
No. 6175
REGISTERED PROFESSIONAL ENGINEER

PRAEGER-KAVANAGH-WATERBURY
STRUCTURAL-ENGINEERS
R.Q. PRAEGER, Partner

CAPITAL PLAZA OFFICE BUILDING

FRANKFORT, KENTUCKY

DRAWN BY	PARTIAL MEZZANINE FRAMING PLAN	DATE 15 MAY 67
TRACED BY	ARCHITECT EDWARD DURELL STONE, 7 EAST 67TH STREET, NEW YORK N.Y.	SCALE AS NOTED
CHECKED BY		COMM. NO. 50066
SECTOR NO. D2	ASSOCIATE ARCHITECTS & ENGINEERS LEE POTTER SMITH & ASSOCIATES, 314 WILKINSON, FRANKFORT, KENTUCKY	DRAWING NO. S 17
	COMMONWEALTH OF KENTUCKY, DEPARTMENT OF FINANCE – ENGINEERING STAFF, FRANKFORT, KENTUCKY	OF 71

APPROVED BY ARCHITECT DATE

APPROVED BY AGENCY HEAD DATE

APPROVED BY OWNER DATE MAY 24

CPA-93

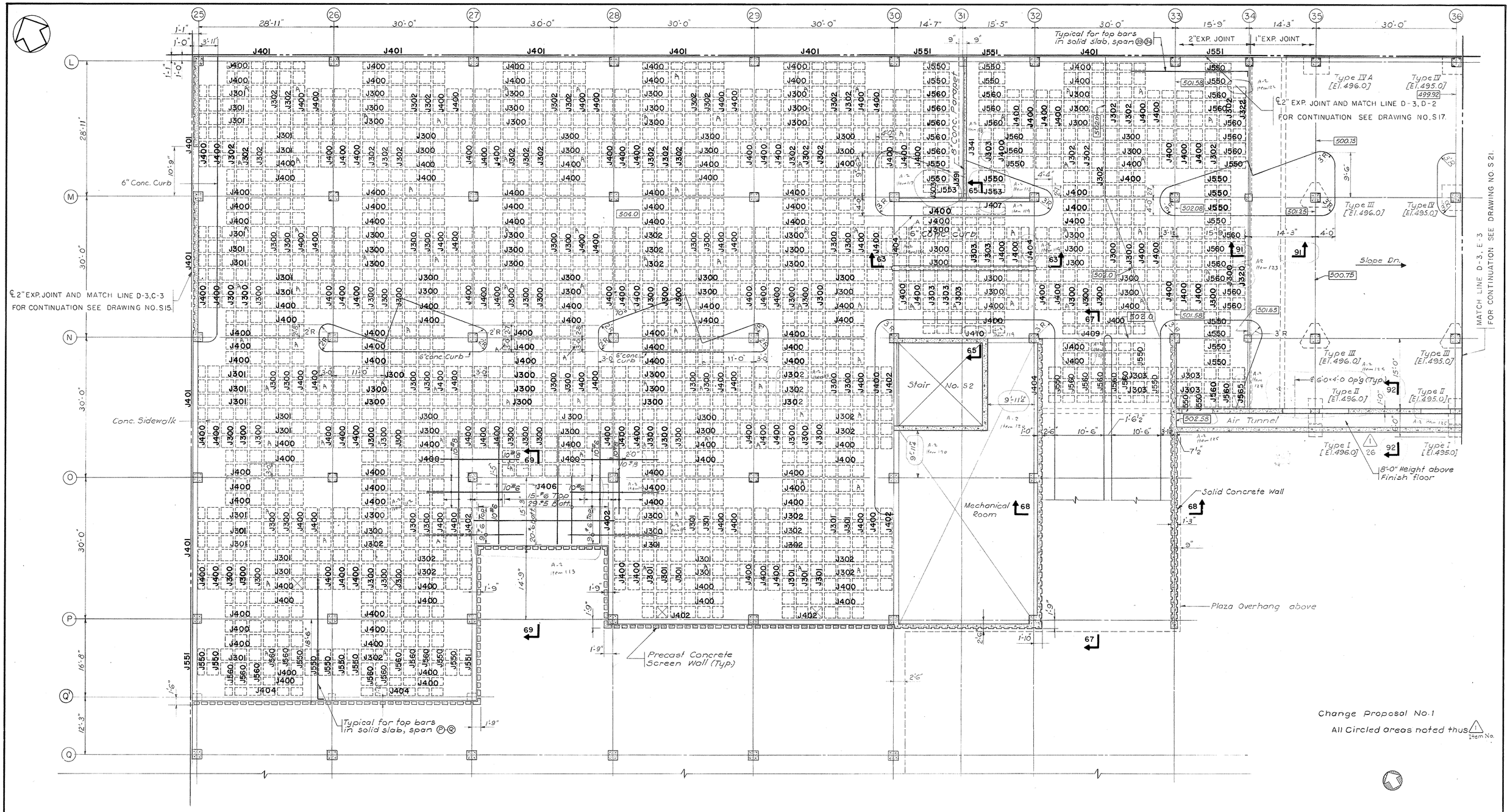

PARTIAL MEZZANINE FRAMING PLAN SECTOR D-3

Scale 1/8"=1'-0"

B-1	C-1	D-1	E-1
B-2	C-2	D-2	E-2
B-3	C-3	D-3	E-3

KEY PLAN

No Scale

TRACINGS CONFORMED TO ADDENDA 11-1-67

Note:

For typical top reinforcement in solid slab, see Dwg. No. S10

AS-BUILT

PRAEGER-KAVANAGH-WATERBURY
STRUCTURAL-ENGINEERS

R.Q. PRAEGER, Partner

STATE OF KENTUCKY
RICHARD Q. PRAEGER
No. 6175
REGISTERED PROFESSIONAL ENGINEER

CAPITAL PLAZA OFFICE BUILDING

FRANKFORT, KENTUCKY

DRAWN BY	PARTIAL MEZZANINE FRAMING PLAN	DATE 15 MAY 67
TRACED BY		SCALE AS NOTED
CHECKED BY J.L.	ARCHITECT EDWARD DURELL STONE, 7 EAST 67TH STREET NEW YORK N.Y.	COMM. NO. 50066
SECTOR NO. D3	ASSOCIATE ARCHITECTS & ENGINEERS LEE POTTER SMITH & ASSOCIATES, 314 WILKINSON FRANKFORT, KENTUCKY	DRAWING NO. S 18
	COMMONWEALTH OF KENTUCKY, DEPARTMENT OF FINANCE – ENGINEERING STAFF, FRANKFORT, KENTUCKY	OF 71

APPROVED BY ARCHITECT DATE

APPROVED BY AGENCY HEAD DATE

APPROVED BY OWNER W.F. McConnell DATE MAY 24 1967

CPA-94

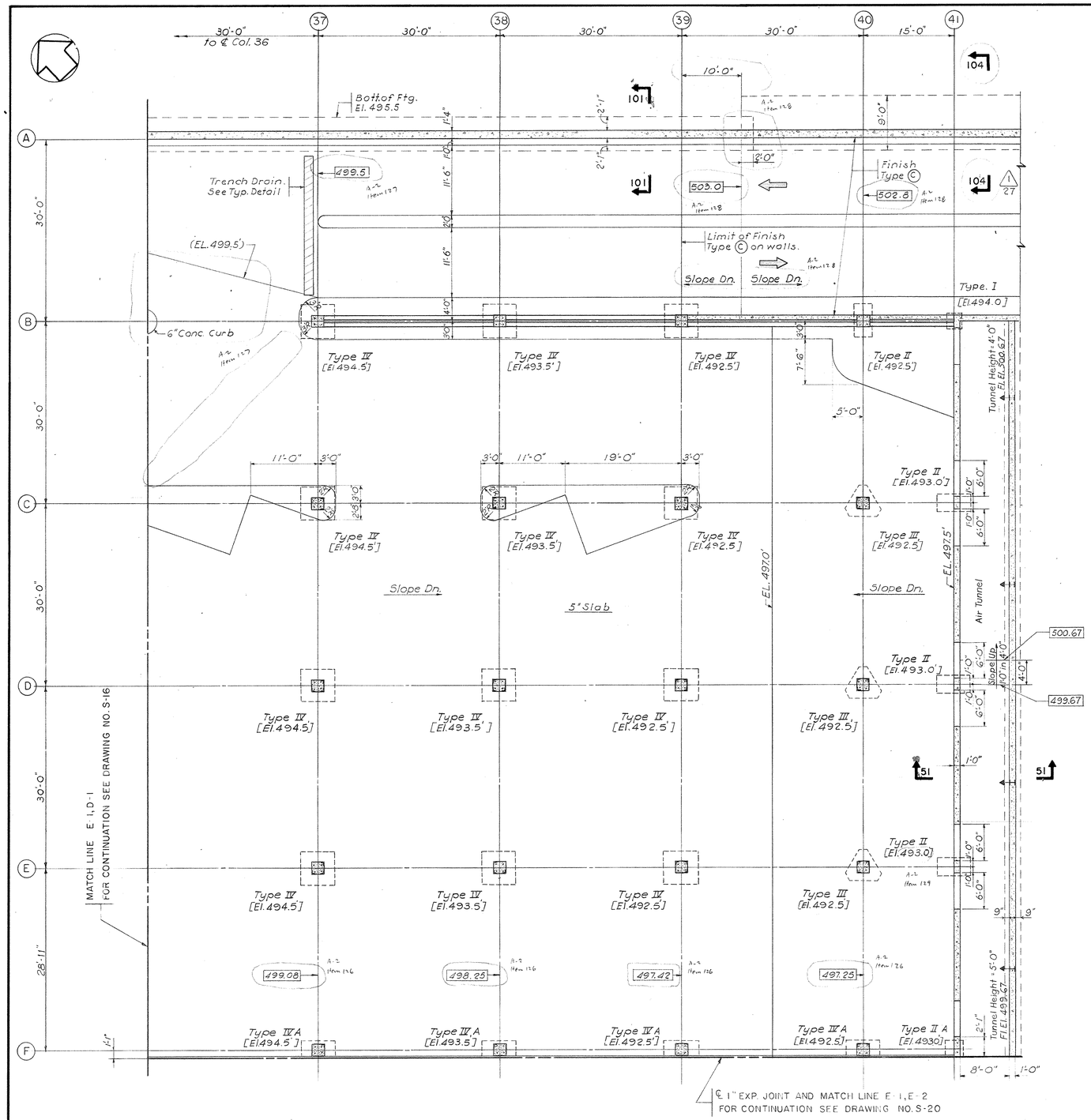

PARTIAL MEZZANINE FRAMING PLAN SECTOR E-1

Scale 1/8"=1'-0"

Change Proposal No. 1

All Circled areas noted thus △1 Item No

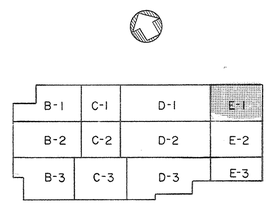

KEY PLAN

No Scale

TRACINGS CONFORMED TO ADDENDA 11-1-67

CAPITAL PLAZA OFFICE BUILDING

FRANKFORT, KENTUCKY

DRAWN BY	PARTIAL MEZZANINE FRAMING PLAN	DATE 15 MAY 67
TRACED BY	ARCHITECT EDWARD DURELL STONE 7 EAST 67TH STREET NEW YORK N.Y.	SCALE AS NOTED
CHECKED BY J.T.		COMM. NO. 50065
SECTOR NO. E1	ASSOCIATE ARCHITECTS & ENGINEERS LEE POTTER SMITH & ASSOCIATES 314 WILKINSON FRANKFORT, KENTUCKY	DRAWING NO. S 19
	COMMONWEALTH OF KENTUCKY DEPARTMENT OF FINANCE – ENGINEERING STAFF FRANKFORT, KENTUCKY	OF 71

STATE OF KENTUCKY — RICHARD Q. PRAEGER No. 6175 REGISTERED PROFESSIONAL ENGINEER

AS-BUILT DRAWINGS
NOTED
ADDS, CARPER & LAKEMAN, INC.

PRAEGER-KAVANAGH-WATERBURY
STRUCTURAL-ENGINEERS
R.Q. PRAEGER, Partner

APPROVED BY _____ ARCHITECT DATE _____

APPROVED BY _____ AGENCY HEAD DATE _____

APPROVED BY _____ OWNER DATE NOV 24 1967

CPA-95

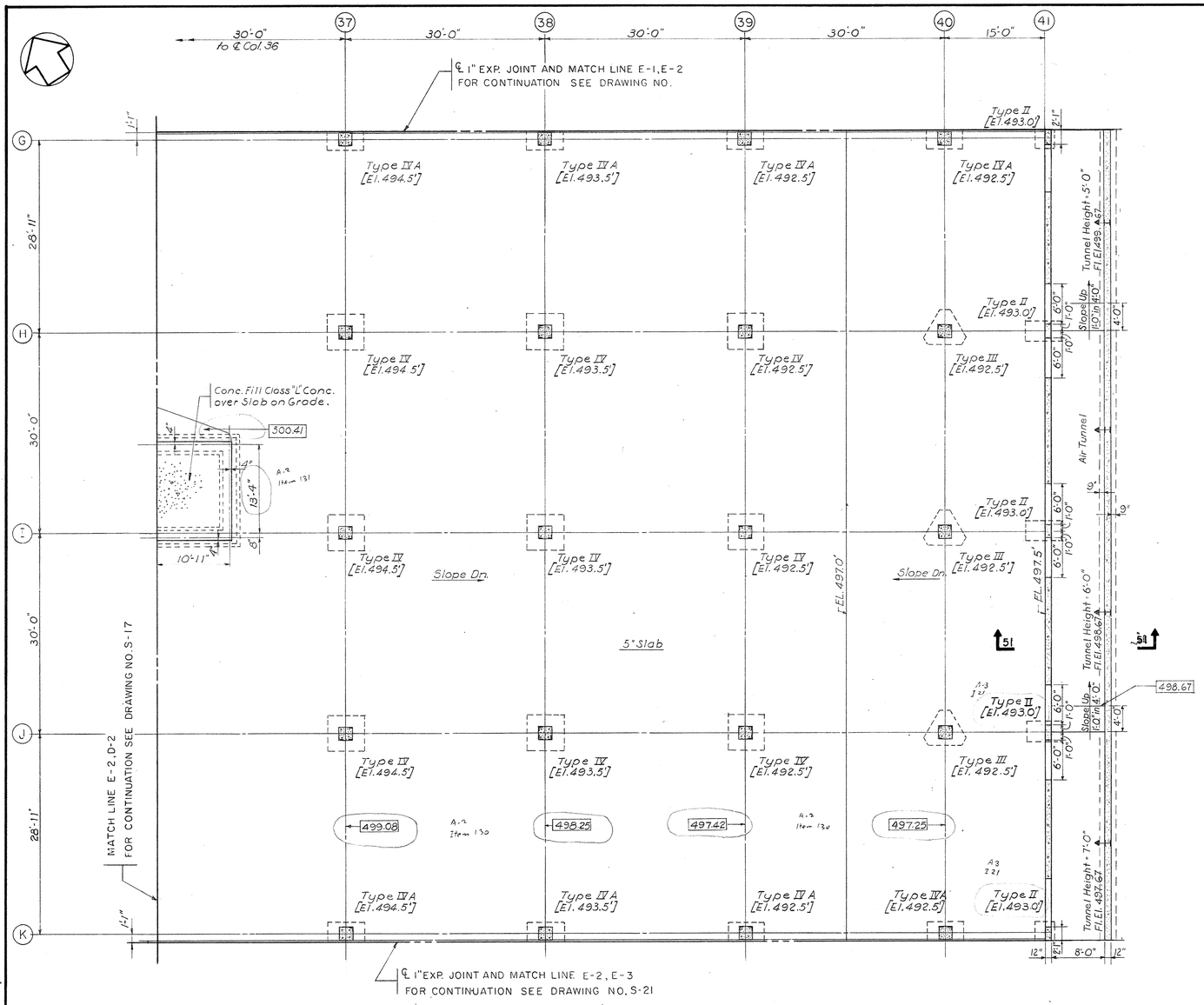

PARTIAL MEZZANINE FRAMING PLAN SECTOR E-2
Scale 3/8"=1'-0"

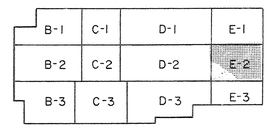

KEY PLAN
No Scale
TRACINGS CONFORMED TO ADDENDA 11-1-67

CAPITAL PLAZA OFFICE BUILDING
FRANKFORT, KENTUCKY

DRAWN BY	PARTIAL MEZZANINE FRAMING PLAN	DATE 15 MAY 67
TRACED BY		SCALE AS NOTED
CHECKED BY J.S.	ARCHITECT EDWARD DURELL STONE 7 EAST 67TH STREET NEW YORK N.Y.	COMM. NO. 50066
SECTOR NO. E2	ASSOCIATE ARCHITECTS & ENGINEERS LEE POTTER SMITH & ASSOCIATES 314 WILKINSON FRANKFORT, KENTUCKY	DRAWING NO. S 20
	COMMONWEALTH OF KENTUCKY DEPARTMENT OF FINANCE – ENGINEERING STAFF FRANKFORT, KENTUCKY	OF 71

APPROVED BY _____ ARCHITECT DATE _____
APPROVED BY _____ STRUCTURAL ENGINEER DATE _____
APPROVED BY _____ OWNER DATE _____

STATE OF KENTUCKY ★ RICHARD Q. PRAEGER No. 6175 REGISTERED PROFESSIONAL ENGINEER ★

AS-BUILT DRAWINGS
DATE: JAN 7 -
HUGG, CARTER & BLAKEMAN, INC.

PRAEGER-KAVANAGH-WATERBURY
STRUCTURAL-ENGINEERS
R.Q. PRAEGER, Partner

CPA-96

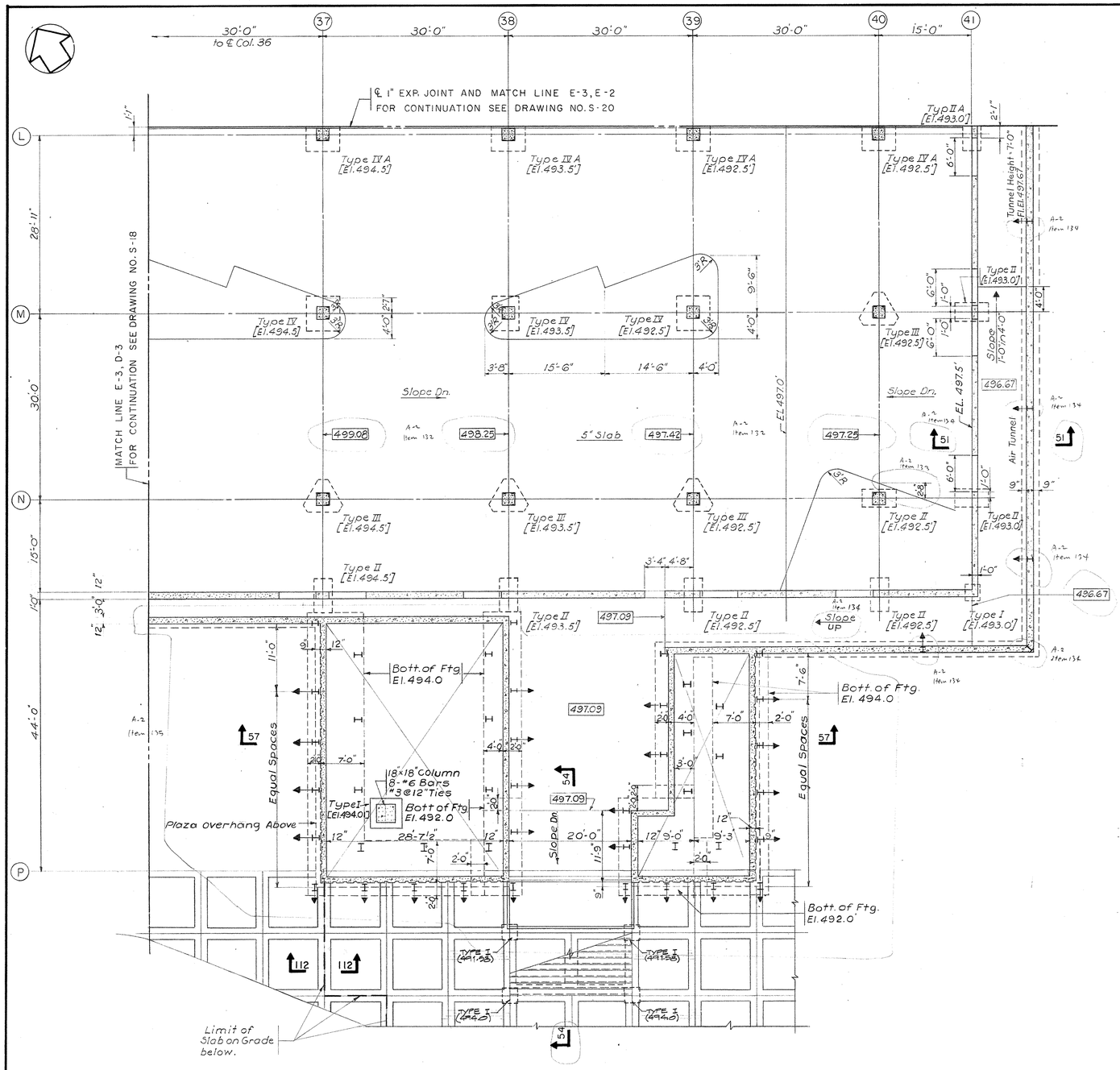

PARTIAL MEZZANINE FRAMING PLAN

Scale $\frac{1}{8}$"-1'-0"

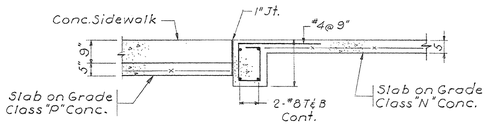

Note: For add'l Details see Dwg. No. S-70

SECTION 112-112

Scale $\frac{1}{2}$"-1'-0"

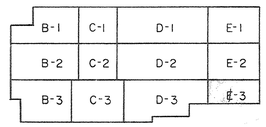

KEY PLAN

No Scale

TRACINGS CONFORMED TO ADDENDA 11-1-67

CAPITAL PLAZA OFFICE BUILDING

FRANKFORT, KENTUCKY

DRAWN BY	PARTIAL MEZZANINE FRAMING PLAN	DATE 15 MAY 67
TRACED BY		SCALE AS NOTED
CHECKED BY J.I.	ARCHITECT EDWARD DURELL STONE 7 EAST 67TH STREET NEW YORK N.Y.	COMM. NO. 30066
SECTOR NO. E 3	ASSOCIATE ARCHITECTS & ENGINEERS LEE POTTER SMITH & ASSOCIATES 314 WILKINSON FRANKFORT, KENTUCKY	DRAWING NO. S 21
	COMMONWEALTH OF KENTUCKY DEPARTMENT OF FINANCE – ENGINEERING STAFF FRANKFORT, KENTUCKY	OF 71

STATE OF KENTUCKY — RICHARD Q. PRAEGER No. 6175 — REGISTERED PROFESSIONAL ENGINEER

AS-BUILT DRAWINGS
DATE:
HUGG, CARTER & CLACKUM, INC.

PRAEGER-KAVANAGH-WATERBURY
STRUCTURAL-ENGINEERS
R.Q. PRAEGER, Partner

APPROVED BY	ARCHITECT	DATE
APPROVED BY		DATE
APPROVED BY	OWNER	DATE

CPA-97

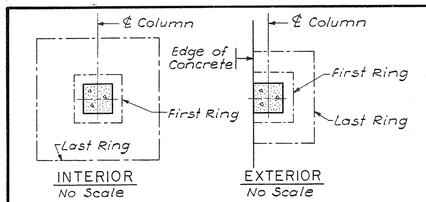

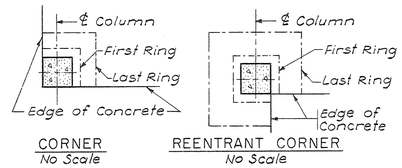

MARK	STIRRUP SCHEDULE
I	2R-12"#4, 1R-16"#3, 2R-12"#3
II	2R-12"#6, 1R-12"#5, 2R-16"#4, 1R-16"#3
III	2R-12"#6, 2R-12"#5, 1R-16"#4, 2R-16"#3
IV	2R-8"#4, 1R-8"#3, 2R-6"#3
V	2R-8"#5, 2R-10"#4, 3R-10"#3
VI	2R-16"#5, 2R-18"#4, 3R-10"#3
VII	1R-6"#4, 1R-8"#3, 4R-6"#3
VIII	2R-12"#5, 2R-16"#4, 2R-16"#3
IX	3R-14"#6, 1R-12"#6, 1R-12"#5, 2R-8"#5
X	3R-18"#6, 3R-16"#6, 2R-12"#5, 2R-12"#4

NOTES:

1. "R" Denotes Ring.
2. First Ring is indicated first in schedule.
3. For grades of reinforcing bar steel, see general notes.
4. Shear head reinforcement is indicated on the framing plans by the symbol ⬡
5. Where depth of structure changes around column, height of stirrups to be adjusted to fit.

△ 1 / 28

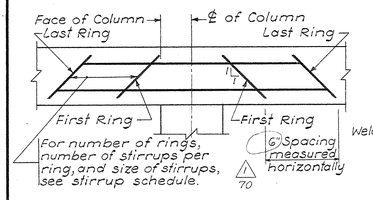

TYPICAL ELEVATION
Scale: 1/2"=1'-0"

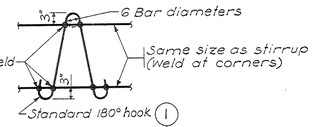

TYPICAL SECTION
Scale: 3/4"=1'-0"

SHEAR HEAD REINFORCEMENT

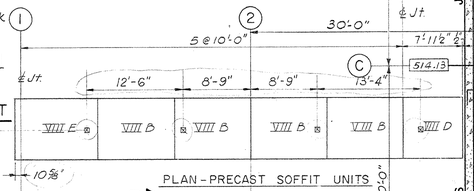

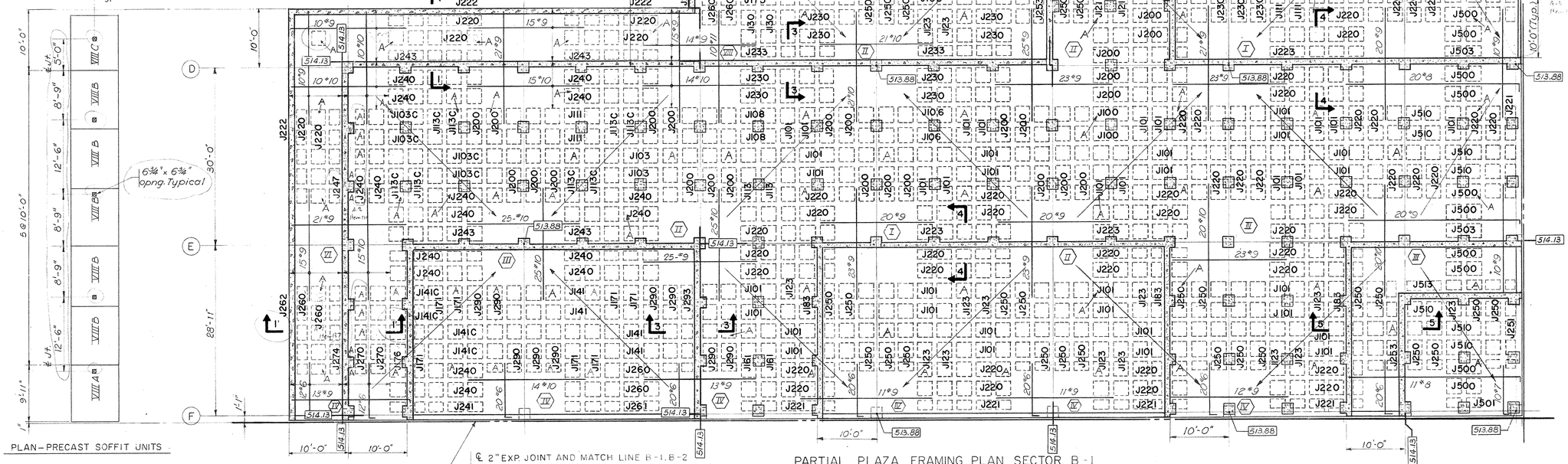

PARTIAL PLAZA FRAMING PLAN SECTOR B-1
Scale 1/8"=1'-0"

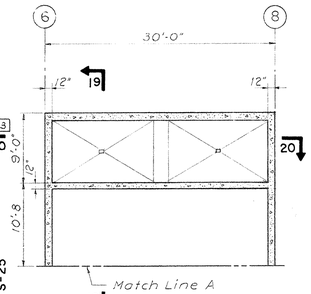

FAN ROOM
Scale 1/8"=1'-0"

All shear head types ⬡
△ 28

Change proposal No.1

All circled areas noted thus △ 1 Item No.

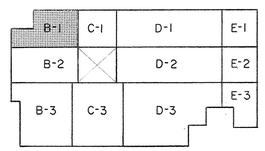

KEY PLAN
No Scale

TRANSMITTED TO ADDENDA 11-1-67

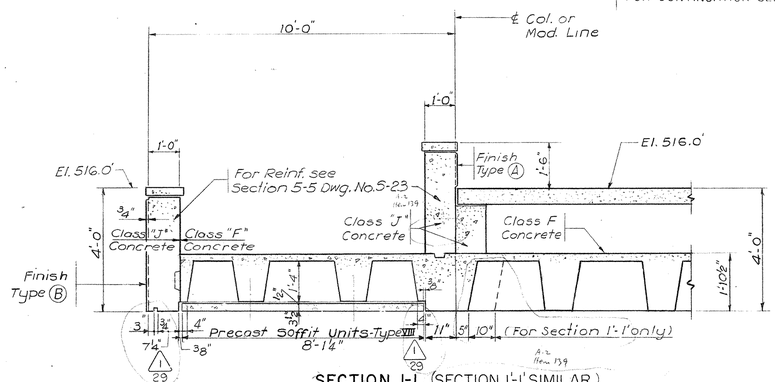

SECTION 1-1 (SECTION 1'-1' SIMILAR)
Scale 1/2"=1'-0"

NOTE
Top steel in joists marked C to be extended to end of cantilever.

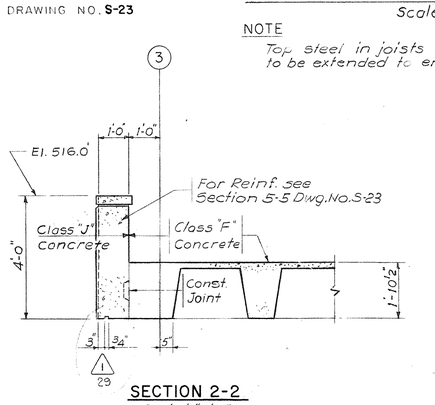

SECTION 2-2
Scale 1/2"=1'-0"

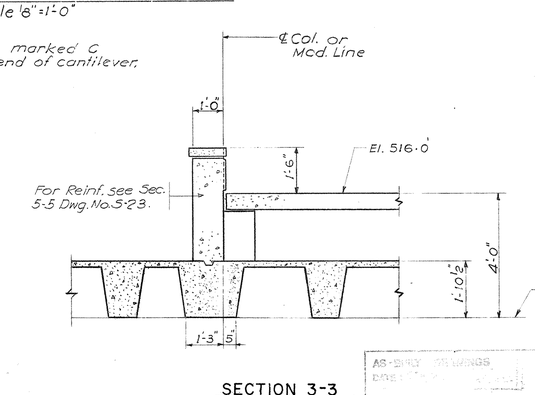

SECTION 3-3
Scale 1/2"=1'-0"

STATE OF KENTUCKY — RICHARD Q. PRAEGER No. 4172 REGISTERED PROFESSIONAL ENGINEER

AS-BUILT DRAWINGS
DATE
RICHARD Q. PRAEGER & ASSOCIATES, INC.

PRAEGER-KAVANAGH-WATERBURY
STRUCTURAL-ENGINEERS
R.Q. PRAEGER, Partner

CAPITAL PLAZA OFFICE BUILDING
FRANKFORT, KENTUCKY

DRAWN BY	PARTIAL PLAZA FRAMING PLAN	DATE 15 MAY 67
TRACED BY	ARCHITECT EDWARD DURELL STONE, 7 EAST 67TH STREET, NEW YORK N.Y.	SCALE AS NOTED
CHECKED BY J.F.	ASSOCIATE ARCHITECTS & ENGINEERS LEE POTTER SMITH & ASSOCIATES, 314 WILKINSON, FRANKFORT, KENTUCKY	COMM. NO. 50066
SECTOR NO. B1	COMMONWEALTH OF KENTUCKY DEPARTMENT OF FINANCE – ENGINEERING STAFF FRANKFORT, KENTUCKY	DRAWING NO. S 22 of 71

APPROVED BY _____ ARCHITECT DATE _____
APPROVED BY _____ DATE _____
APPROVED BY _____ OWNER DATE MAY 24 1967

CPA-98

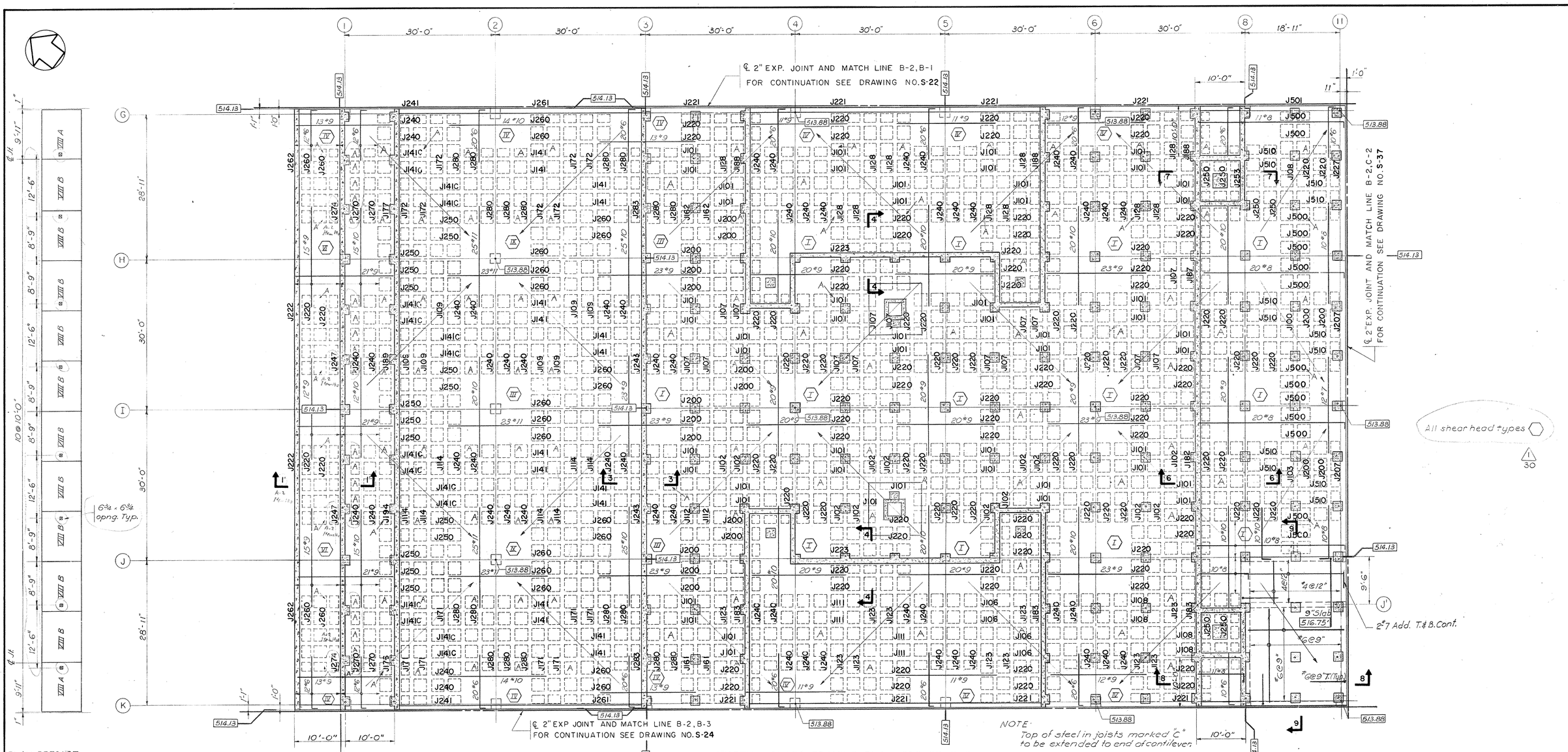

PLAN-PRECAST SOFFIT UNIT
Scale: ⅛"=1'-0"

PARTIAL PLAZA FRAMING PLAN SECTOR B-2
Scale ⅛"=1'-0"

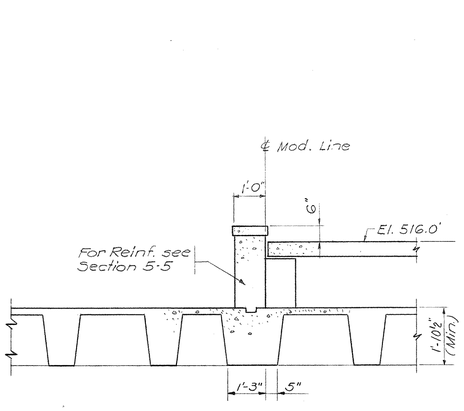

SECTION 4-4
Scale ½"=1'-0"

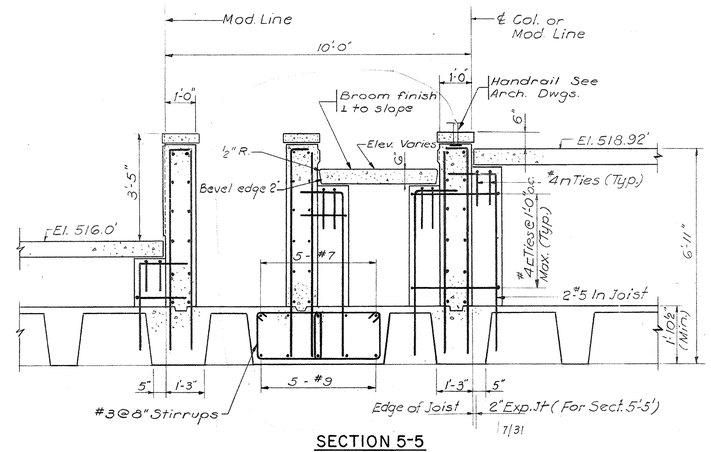

SECTION 5-5
SECTION 5'-5' (Similar)
Scale ½"=1'-0"

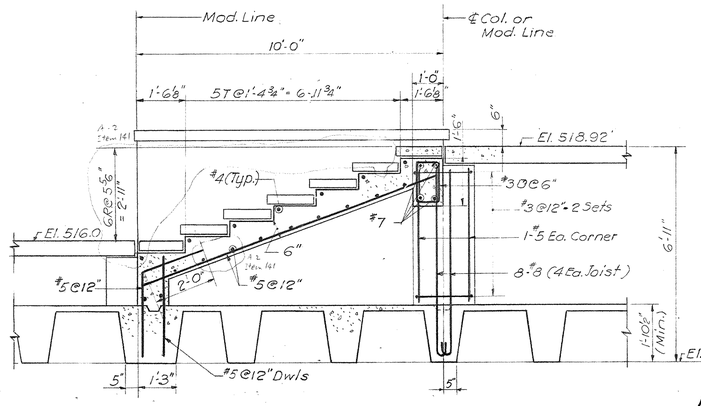

SECTION 6-6
Scale ½"=1'-0"

Change Proposal No. 1
All circled areas noted thus △ Item No.

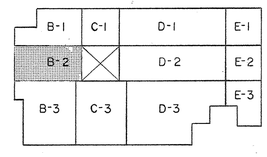

KEY PLAN
No Scale

July 31st '68
TRACINGS CONFORMED TO ADDENDA 11-1-67

CAPITAL PLAZA OFFICE BUILDING
FRANKFORT, KENTUCKY

DRAWN BY	PARTIAL PLAZA FRAMING PLAN	DATE 15 MAY 67
TRACED BY	ARCHITECT EDWARD DURELL STONE 7 EAST 67TH STREET NEW YORK N.Y.	SCALE AS NOTED
CHECKED BY J.P.		COMM. NO. 50066
SECTOR NO. B2	ASSOCIATE ARCHITECTS & ENGINEERS LEE POTTER SMITH & ASSOCIATES 314 WILKINSON FRANKFORT, KENTUCKY	DRAWING NO. S 23
	COMMONWEALTH OF KENTUCKY DEPARTMENT OF FINANCE – ENGINEERING STAFF FRANKFORT, KENTUCKY	OF 71

STATE OF KENTUCKY — RICHARD Q. PRAEGER No. 6175 — REGISTERED PROFESSIONAL ENGINEER

AS-BUILT DRAWINGS
DATE 7-7-71
RIGGS, CARTER & KLAPTHAM, INC.

PRAEGER-KAVANAGH-WATERBURY
STRUCTURAL-ENGINEERS
R.Q. PRAEGER, Partner

APPROVED BY	ARCHITECT	DATE
APPROVED BY	AGENCY HEAD	DATE
APPROVED BY	OWNER	DATE MAY 24, 1967

CPA 93

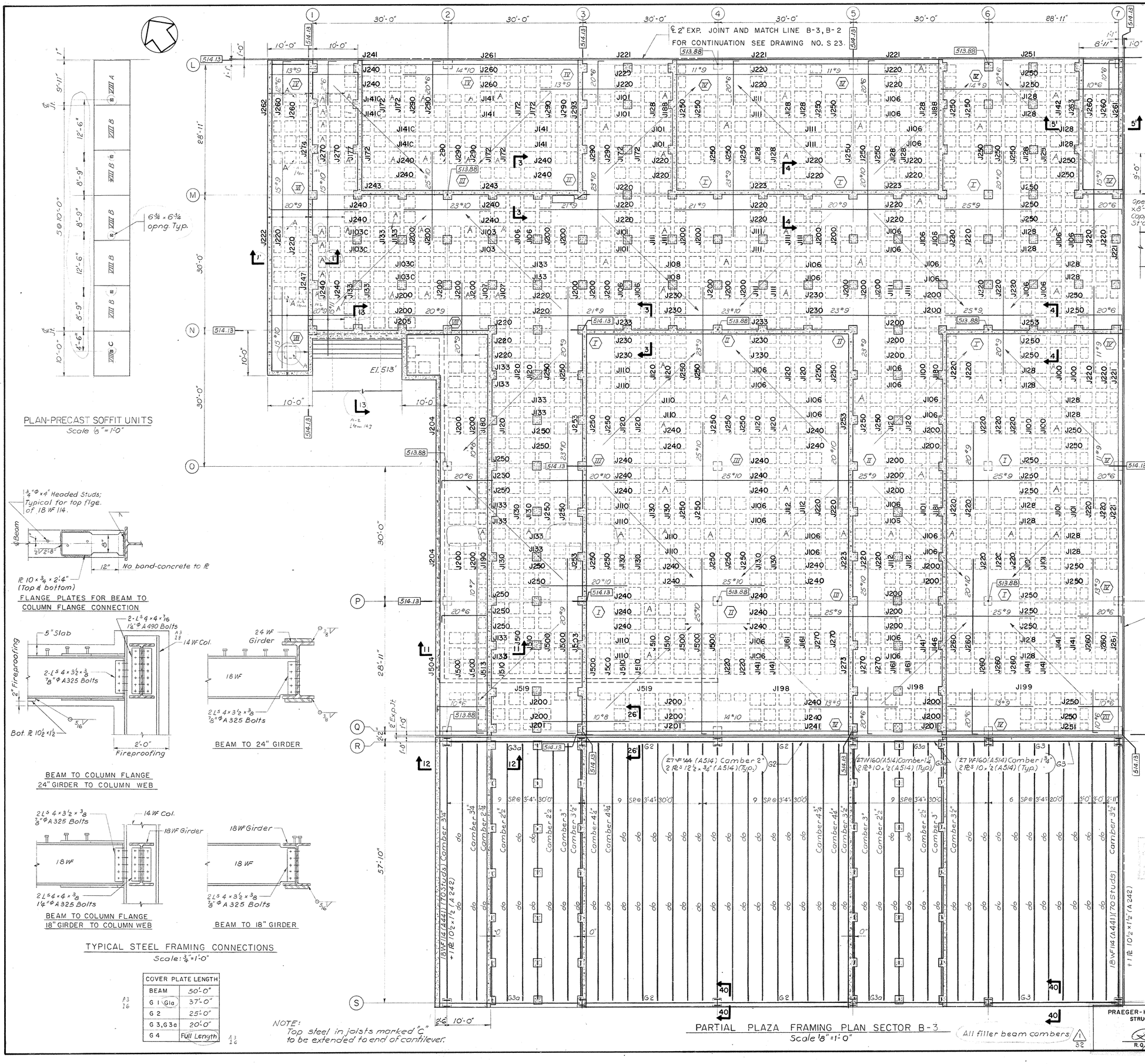

COVER PLATE LENGTH	
BEAM	50'-0"
G 1 (Gla)	37'-0"
G 2	25'-0"
G 3, G 3a	20'-0"
G 4	Full Length

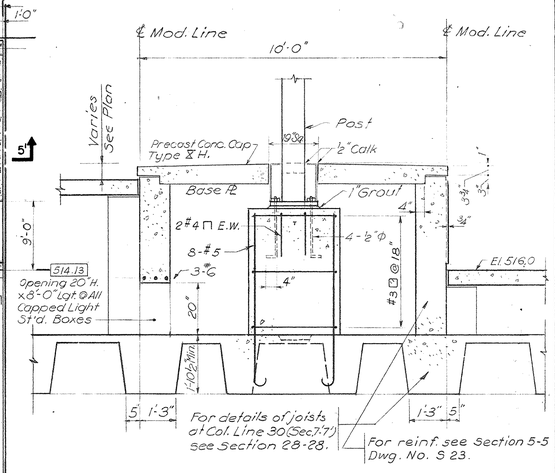

SECTION 7-7
SECTIONS 7'-7' & 7"-7" (Similar)
Scale ½"=1'-0"

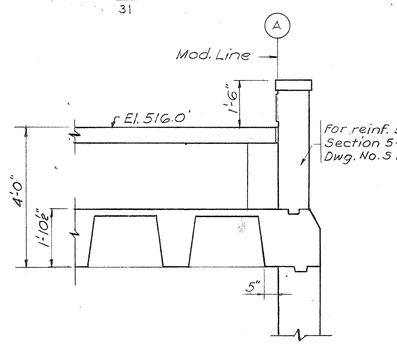

SECTION 10-10
Scale ½"=1'-0"

Change Proposal No. 1
All circled Areas noted thus (1) Item No.

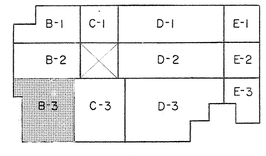

KEY PLAN
No Scale

TRACINGS CONFORMED TO ADDENDA 11-1-67

CAPITAL PLAZA OFFICE BUILDING

FRANKFORT, KENTUCKY

DRAWN BY	PARTIAL PLAZA FRAMING PLAN	DATE 15 MAY 67
TRACED BY		SCALE AS NOTED
CHECKED BY J.L.	ARCHITECT EDWARD DURELL STONE 7 EAST 67TH STREET NEW YORK N.Y.	COMM. NO. .50066
SECTOR NO. B3	ASSOCIATE ARCHITECTS & ENGINEERS LEE POTTER SMITH & ASSOCIATES 314 WILKINSON FRANKFORT, KENTUCKY	DRAWING NO. S 24
	COMMONWEALTH OF KENTUCKY DEPARTMENT OF FINANCE – ENGINEERING STAFF FRANKFORT, KENTUCKY	OF 71

APPROVED BY ARCHITECT — DATE
APPROVED BY — DATE
APPROVED BY AGENCY HEAD W.J. McConnell OWNER — DATE May 24 1967

PRAEGER-KAVANAGH-WATERBURY
STRUCTURAL-ENGINEERS
R.Q. PRAEGER, Partner

STATE OF KENTUCKY
RICHARD Q. PRAEGER
No. 6175
REGISTERED PROFESSIONAL ENGINEER

CPA-100

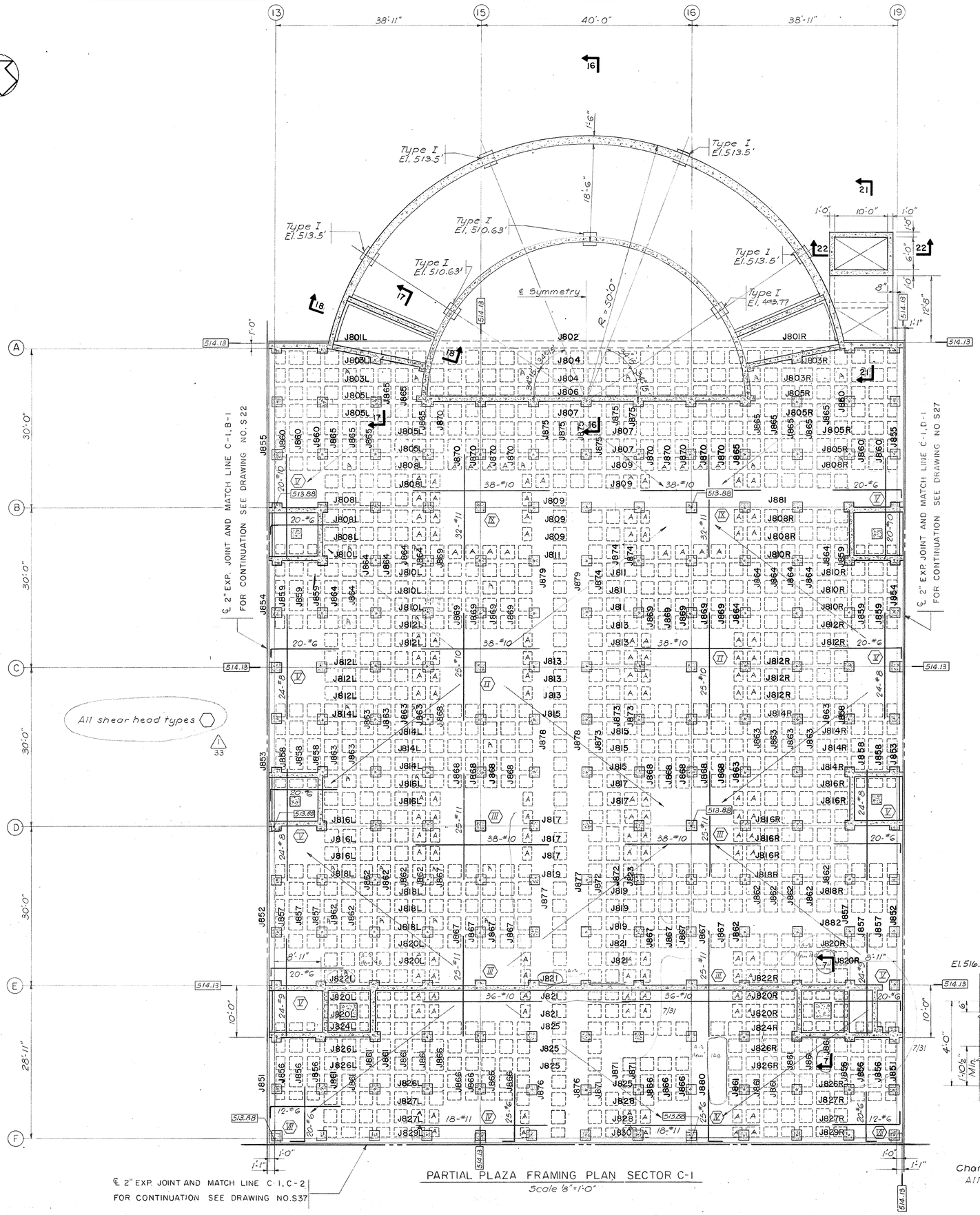

PARTIAL PLAZA FRAMING PLAN SECTOR C-1

Scale 1/8"=1'-0"

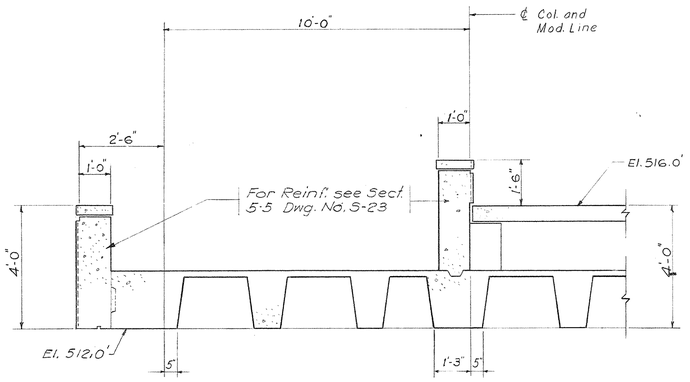

SECTION 11-11

Scale: 1/2" = 1'-0"

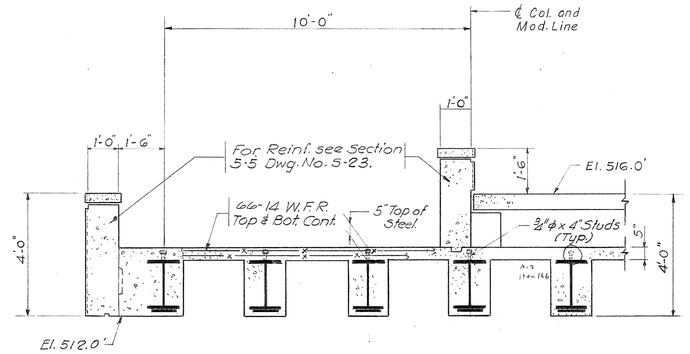

SECTION 12-12

Scale: 1/2" = 1'-0"

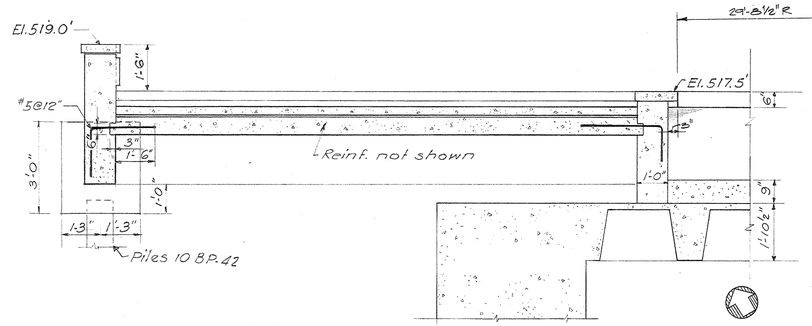

SECTION 18-18

Scale: 1/2" = 1'-0"

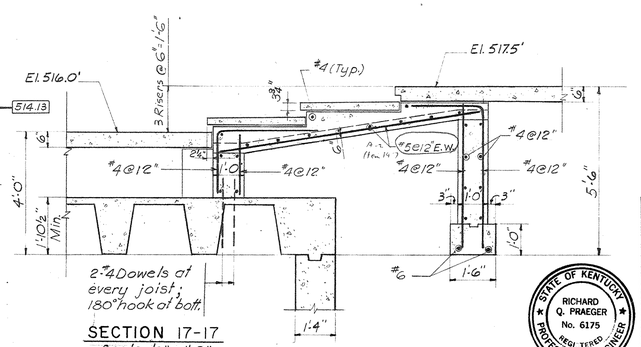

SECTION 17-17

Scale: 1/2" = 1'-0"

B-1	C-1	D-1	E-1
B-2	C-2	D-2	E-2
B-3	C-3	D-3	E-3

KEY PLAN

No Scale

July 31st '68

TRACINGS CONFORMED TO ADDENDA 11-1-67

Change Proposal No. 1

All circled Areas noted thus 1

Item No.

AS BUILT DRAWINGS

DATE

CAPITAL PLAZA OFFICE BUILDING

FRANKFORT, KENTUCKY

DRAWN BY	PARTIAL PLAZA FRAMING PLAN		DATE 15 MAY 67
TRACED BY			SCALE AS NOTED
CHECKED BY +1	ARCHITECT EDWARD DURELL STONE 7 EAST 67TH STREET NEW YORK N.Y.		COMM. NO. 50066
SECTOR NO. C1	ASSOCIATE ARCHITECTS & ENGINEERS LEE POTTER SMITH & ASSOCIATES 314 WILKINSON FRANKFORT, KENTUCKY		DRAWING NO. S 25
P&A-15	COMMONWEALTH OF KENTUCKY DEPARTMENT OF FINANCE – ENGINEERING STAFF FRANKFORT, KENTUCKY		OF 71

STATE OF KENTUCKY ★ RICHARD Q. PRAEGER No. 6175 REGISTERED PROFESSIONAL ENGINEER ★

PRAEGER-KAVANAGH-WATERBURY
STRUCTURAL-ENGINEERS
R.Q. PRAEGER, Partner

APPROVED BY ARCHITECT DATE

APPROVED BY AGENCY HEAD DATE MAY 24

APPROVED BY OWNER

CPA-101

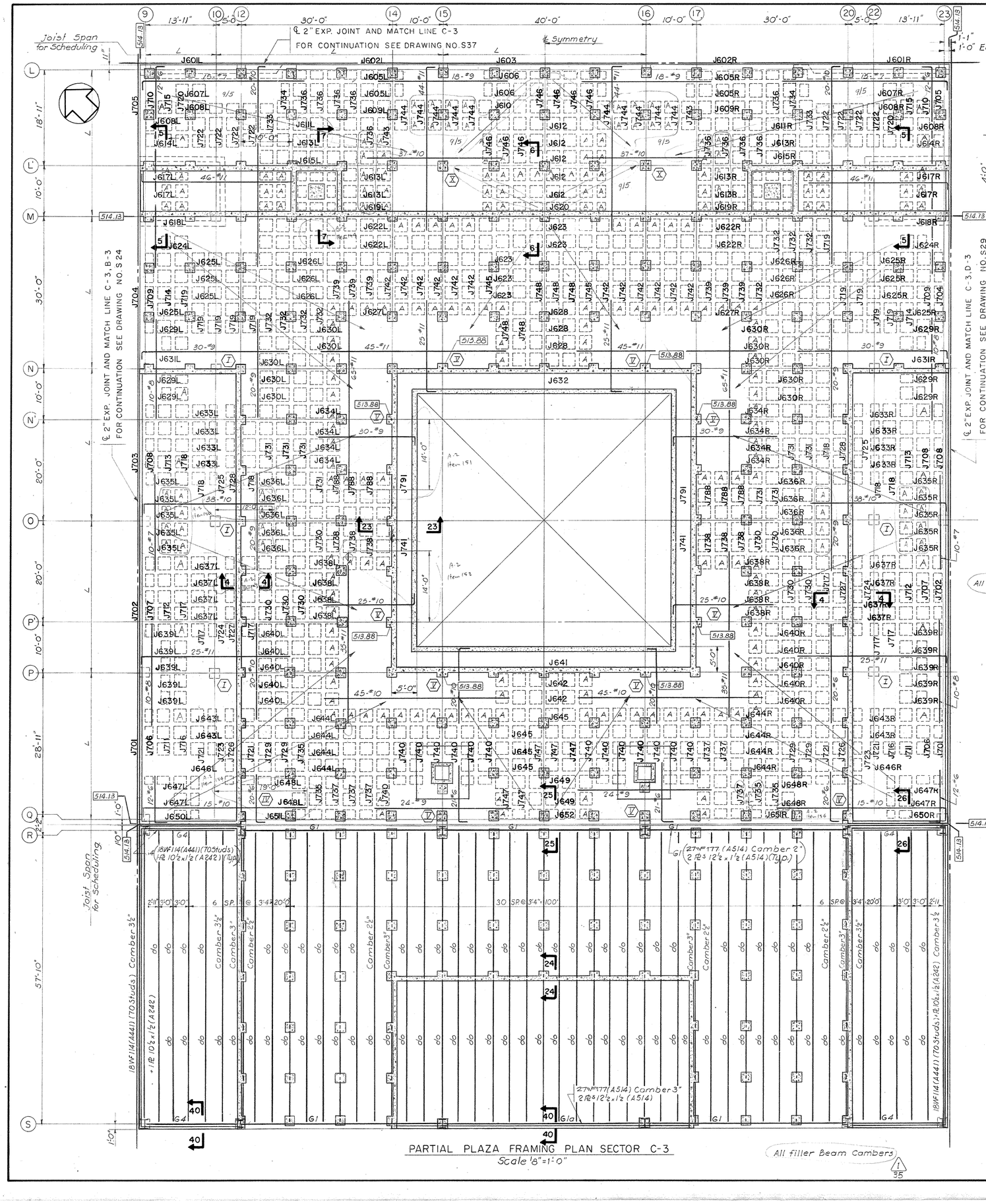

PARTIAL PLAZA FRAMING PLAN SECTOR C-3
Scale 1/8"=1'-0"

All filler Beam Cambers

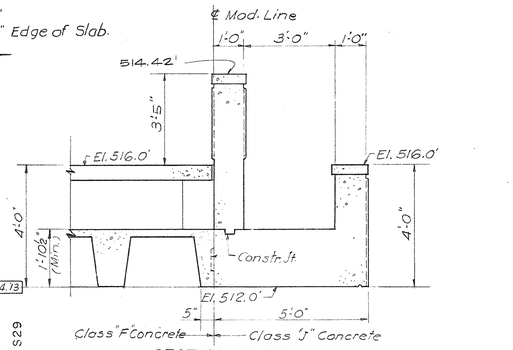

SECTION 23-23
Scale 1/2"=1'-0"

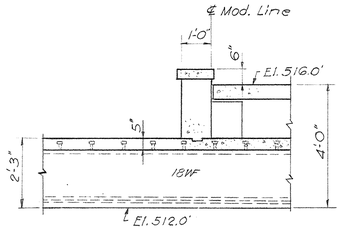

SECTION 24-24
Scale 1/2"=1'-0"

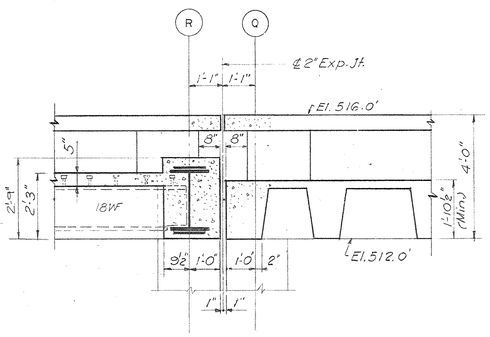

SECTION 25-25
Scale 1/2"=1'-0"

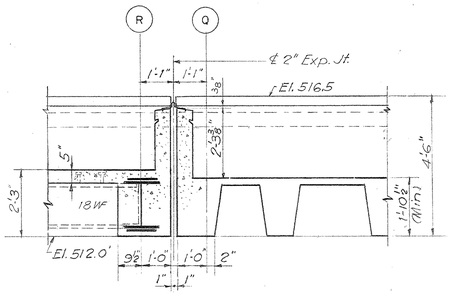

SECTION 26-26
Scale 1/2"=1'-0"

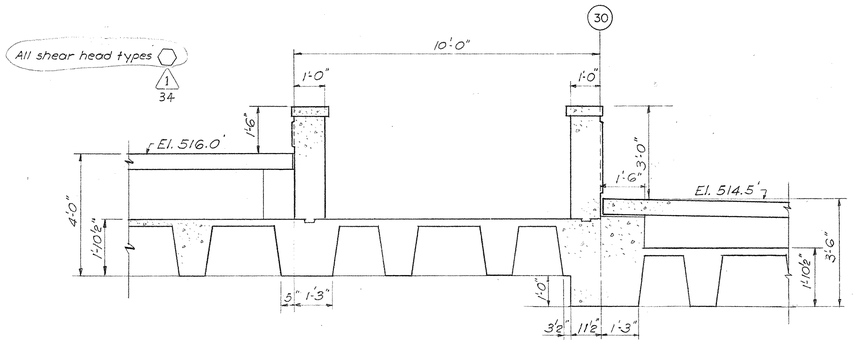

Change Proposal No. 1
All circled Areas Noted thus Item No.

SECTION 27-27
Scale 1/2"=1'-0"

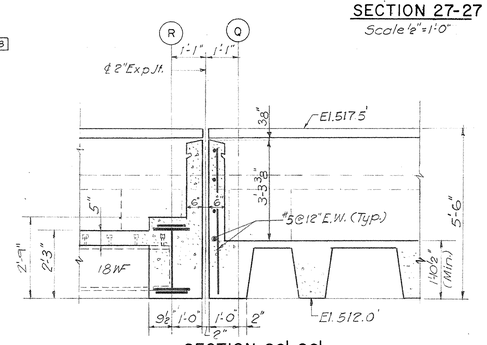

SECTION 26'-26'
Scale 1/2"=1'-0"

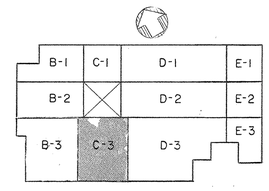

KEY PLAN
No Scale

9/5/68
TRACINGS CONFORMED TO ADDENDA 11-1-67

CAPITAL PLAZA OFFICE BUILDING
FRANKFORT, KENTUCKY

DRAWN BY	PARTIAL PLAZA FRAMING PLAN	DATE 15 MAY 67
TRACED BY	ARCHITECT EDWARD DURELL STONE 7 EAST 67TH STREET NEW YORK N.Y.	SCALE AS NOTED
CHECKED BY J.I.		COMM. NO. 50066
SECTOR NO. C3	ASSOCIATE ARCHITECTS & ENGINEERS LEE POTTER SMITH & ASSOCIATES 314 WILKINSON FRANKFORT, KENTUCKY	DRAWING NO. S 26
	COMMONWEALTH OF KENTUCKY DEPARTMENT OF FINANCE – ENGINEERING STAFF FRANKFORT, KENTUCKY	OF 71

STATE OF KENTUCKY
RICHARD Q. PRAEGER
No. 6175
REGISTERED PROFESSIONAL ENGINEER

AS-BUILT DRAWINGS
DATE:
HUGG, CARTER & BLAKEMAN, INC.

PRAEGER-KAVANAGH-WATERBURY
STRUCTURAL-ENGINEERS
R.Q. PRAEGER, Partner

APPROVED BY ARCHITECT DATE
APPROVED BY AGENCY HEAD DATE
APPROVED BY W. J. McConnell OWNER DATE MAY 24 1967

CPA-102

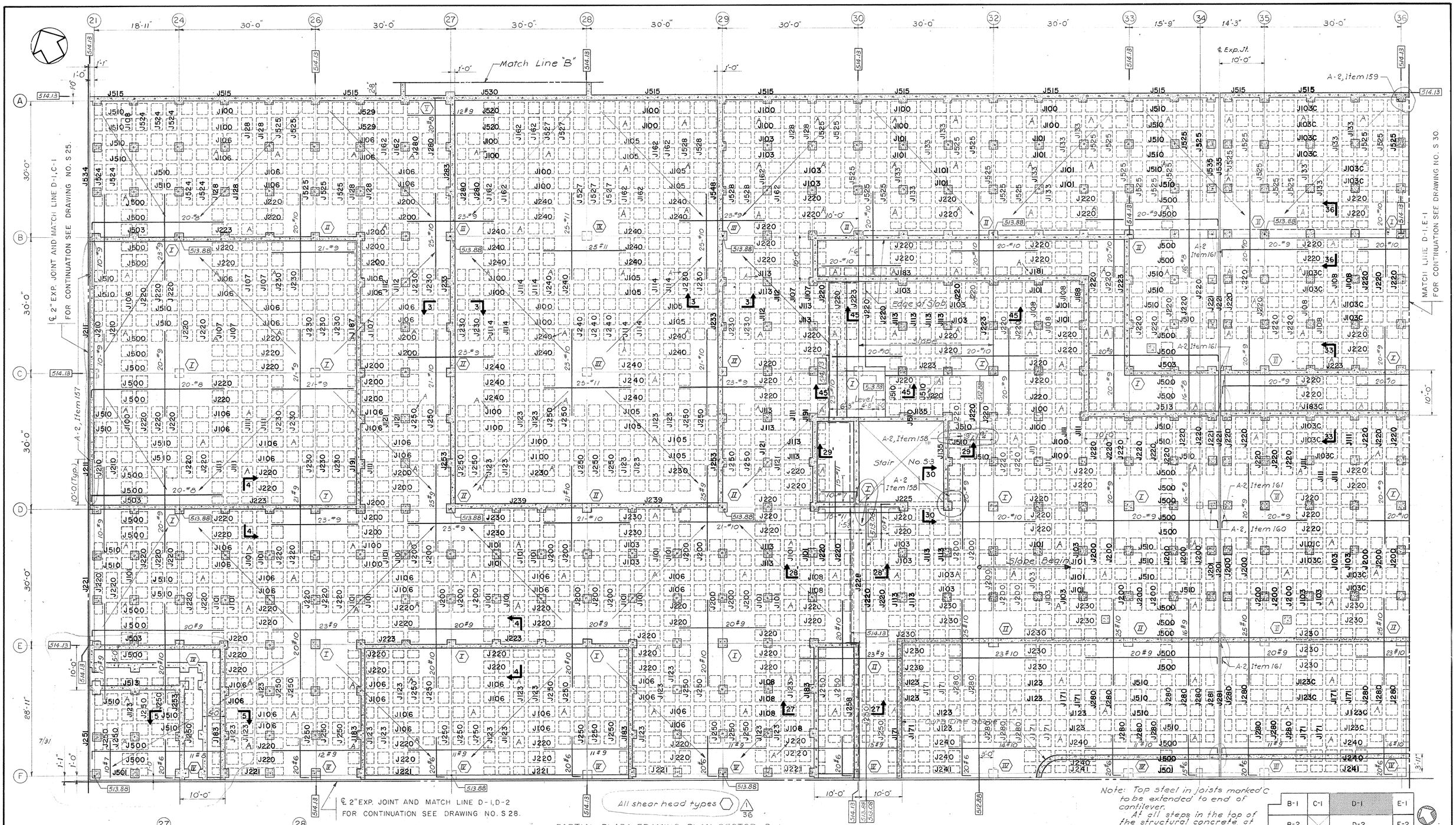

PARTIAL PLAZA FRAMING PLAN SECTOR D-1
Scale 1/8" = 1'-0"

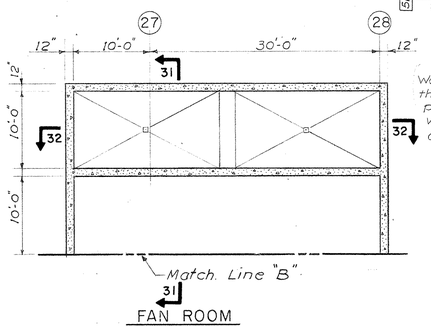

FAN ROOM
Scale 1/8" = 1'-0"

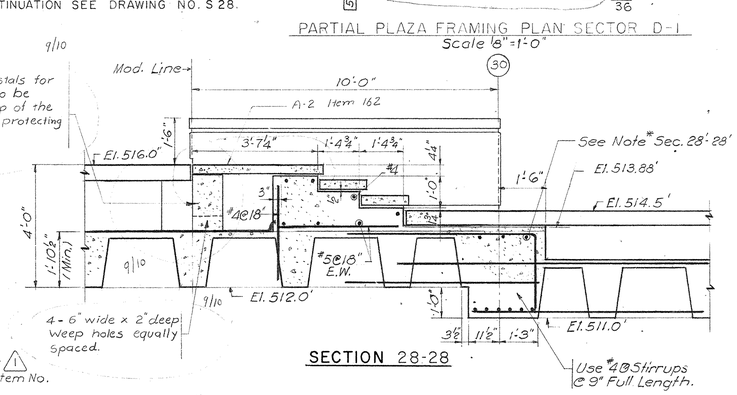

SECTION 28-28

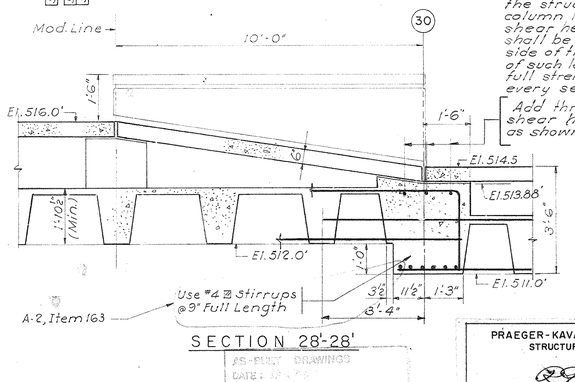

SECTION 28'-28'

Note: Top steel in joists marked C to be extended to end of cantilever.
At all steps in the top of the structural concrete at column lines, the indicated shear head reinforcement shall be provided on each side of the step and shall be of such length as to develop the full strength of the bars at every section.
Add three bars at each shear head of same size as shown on plans..

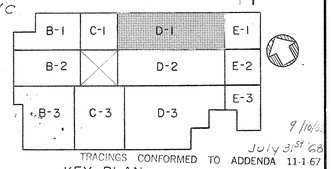

TRACINGS CONFORMED TO ADDENDA 11-1-67
July 31st '68

KEY PLAN
No Scale

Change Proposal No. 1
All circled Areas noted thus 1 Item No.

STATE OF KENTUCKY
RICHARD Q. PRAEGER
No. 6175
REGISTERED PROFESSIONAL ENGINEER

CAPITAL PLAZA OFFICE BUILDING
FRANKFORT, KENTUCKY

DRAWN BY	PARTIAL PLAZA FRAMING PLAN	DATE 15 MAY 67
TRACED BY	ARCHITECT EDWARD DURELL STONE 7 EAST 67TH STREET NEW YORK N. Y.	SCALE AS NOTED
CHECKED BY J.T.		COMM. NO. 50066
SECTOR NO. D1	ASSOCIATE ARCHITECTS & ENGINEERS LEE POTTER SMITH & ASSOCIATES 314 WILKINSON FRANKFORT, KENTUCKY	DRAWING NO. S 27
	COMMONWEALTH OF KENTUCKY DEPARTMENT OF FINANCE – ENGINEERING STAFF FRANKFORT, KENTUCKY	OF 71

PRAEGER-KAVANAGH-WATERBURY
STRUCTURAL-ENGINEERS
R. Q. PRAEGER, Partner

APPROVED BY ARCHITECT DATE
APPROVED BY AGENCY HEAD DATE
APPROVED BY W. J. McConnell OWNER DATE MAY 24 1967

CPA-103

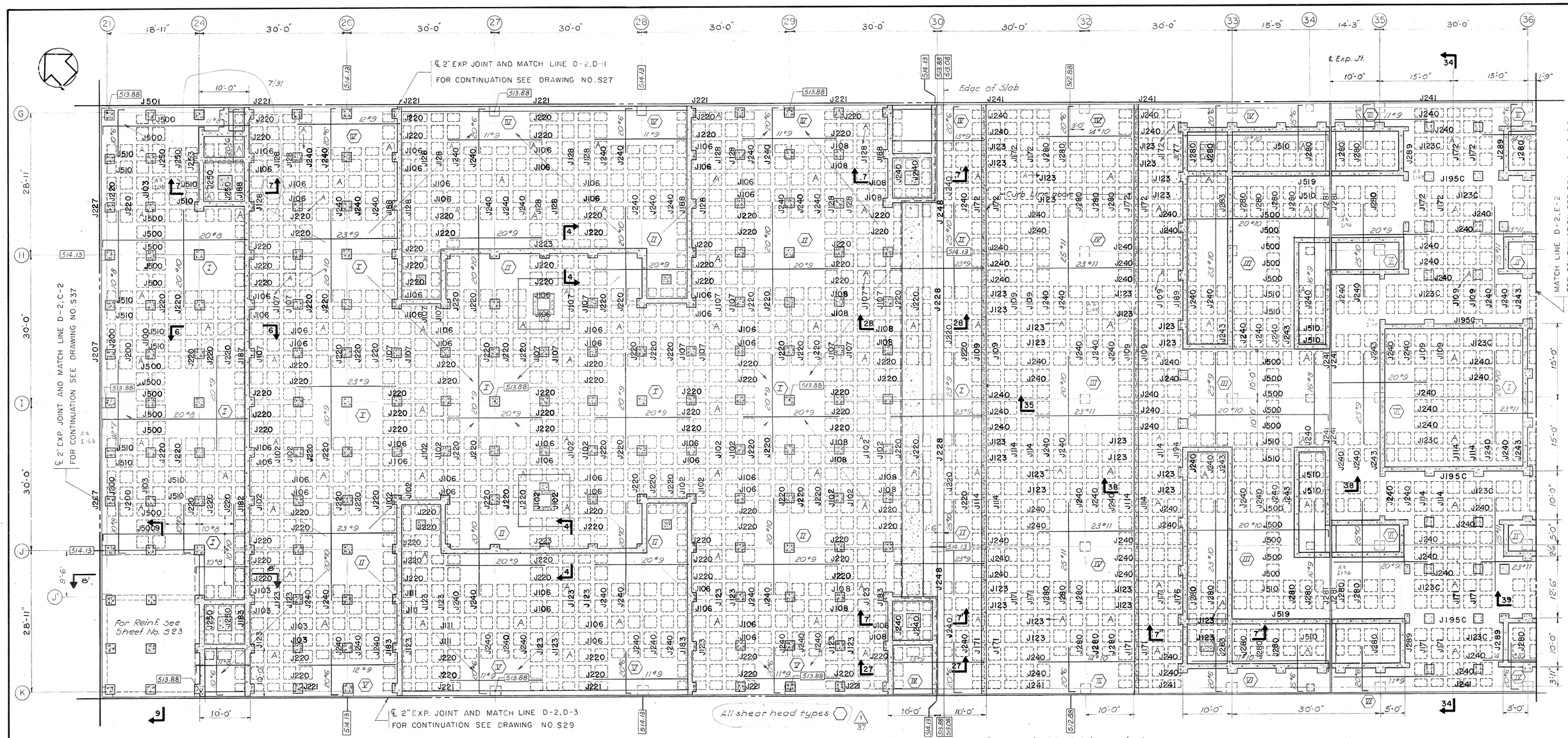

PARTIAL PLAZA FRAMING PLAN SECTOR D-2

Scale 1/8"=1'-0"

Note: Top steel in joists marked C to be extended to end of cantilever.

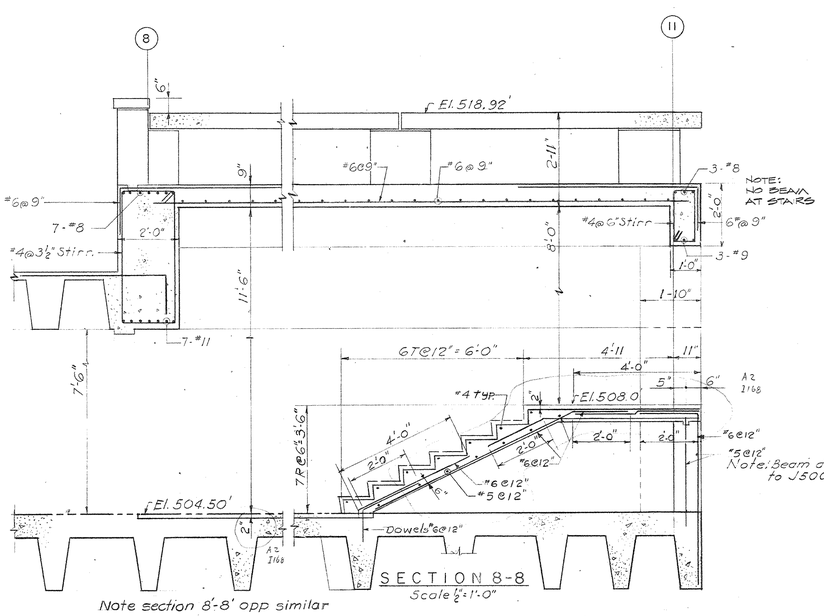

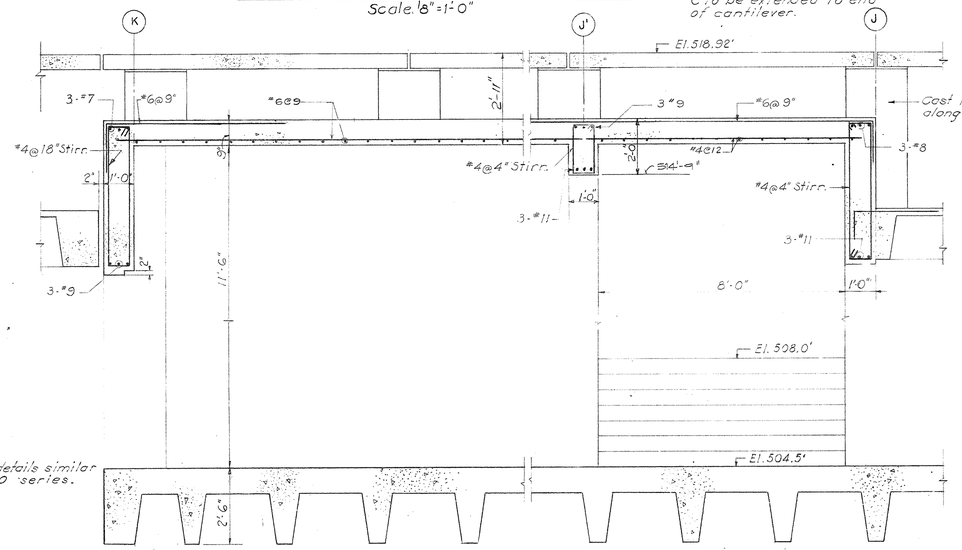

Change Proposal No. 1
All circled Areas noted thus (1) Item No.

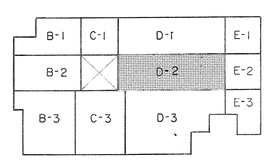

KEY PLAN

No Scale

July 3, 1968
TRACINGS CONFORMED TO ADDENDA 11-1-67

CAPITAL PLAZA OFFICE BUILDING

FRANKFORT, KENTUCKY

DRAWN BY	PARTIAL PLAZA FRAMING PLAN	DATE 15 MAY 67
TRACED BY		SCALE AS NOTED
CHECKED BY J.S.	ARCHITECT EDWARD DURELL STONE, 7 EAST 67TH STREET, NEW YORK N.Y.	COMM. NO. 50026
SECTOR NO. D2	ASSOCIATE ARCHITECTS & ENGINEERS LEE POTTER SMITH & ASSOCIATES, 314 WILKINSON, FRANKFORT, KENTUCKY	DRAWING NO. S 28
	COMMONWEALTH OF KENTUCKY DEPARTMENT OF FINANCE – ENGINEERING STAFF FRANKFORT, KENTUCKY	OF 71

STATE OF KENTUCKY
RICHARD Q. PRAEGER
No. 6175
REGISTERED PROFESSIONAL ENGINEER

PRAEGER-KAVANAGH-WATERBURY
STRUCTURAL-ENGINEERS
R.Q. PRAEGER, Partner

APPROVED BY _____ ARCHITECT DATE _____

APPROVED BY _____ AGENCY HEAD DATE MAY 28

APPROVED BY _____ OWNER DATE _____

CPA-104

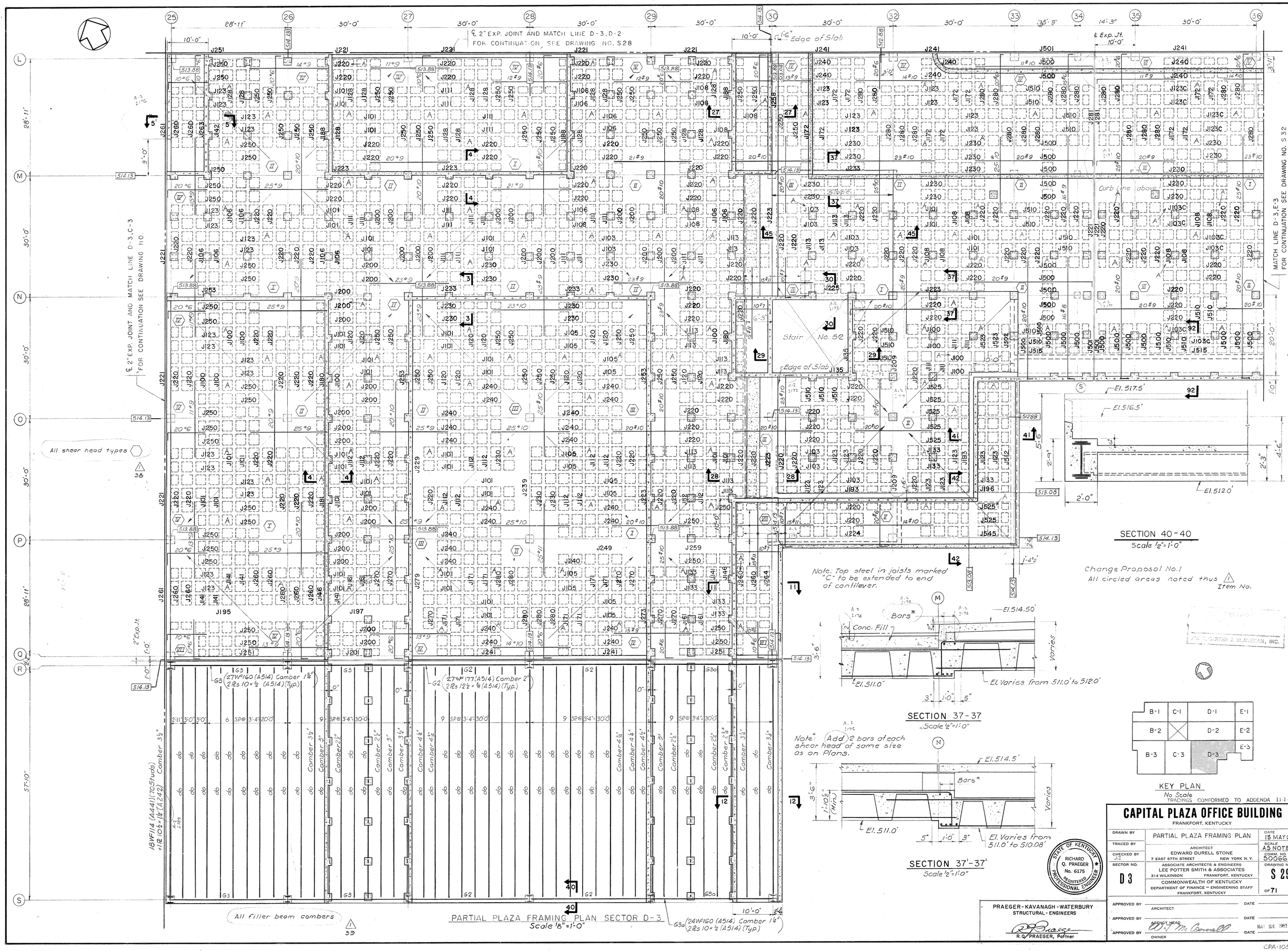

PARTIAL PLAZA FRAMING PLAN SECTOR D-3
Scale 1/8"=1'-0"

TRACINGS CONFORMED TO ADDENDA 11-1-57

CAPITAL PLAZA OFFICE BUILDING

FRANKFORT, KENTUCKY

DRAWN BY	PARTIAL PLAZA FRAMING PLAN	DATE 15 MAY 67
TRACED BY	ARCHITECT EDWARD DURELL STONE 7 EAST 67TH STREET NEW YORK N. Y.	SCALE AS NOTED
CHECKED BY J.T.	ASSOCIATE ARCHITECTS & ENGINEERS LEE POTTER SMITH & ASSOCIATES 314 WILKINSON FRANKFORT, KENTUCKY	COMM. NO. 50066
SECTOR NO. D 3	COMMONWEALTH OF KENTUCKY DEPARTMENT OF FINANCE – ENGINEERING STAFF FRANKFORT, KENTUCKY	DRAWING NO. S 29 OF 71

STATE OF KENTUCKY RICHARD Q. PRAEGER No. 6175 REGISTERED PROFESSIONAL ENGINEER

PRAEGER-KAVANAGH-WATERBURY
STRUCTURAL-ENGINEERS
R. Q. PRAEGER, Partner

APPROVED BY ARCHITECT DATE
APPROVED BY AGENCY HEAD DATE
APPROVED BY W. J. McConnell OWNER DATE MAR 24 1967

CPA-105

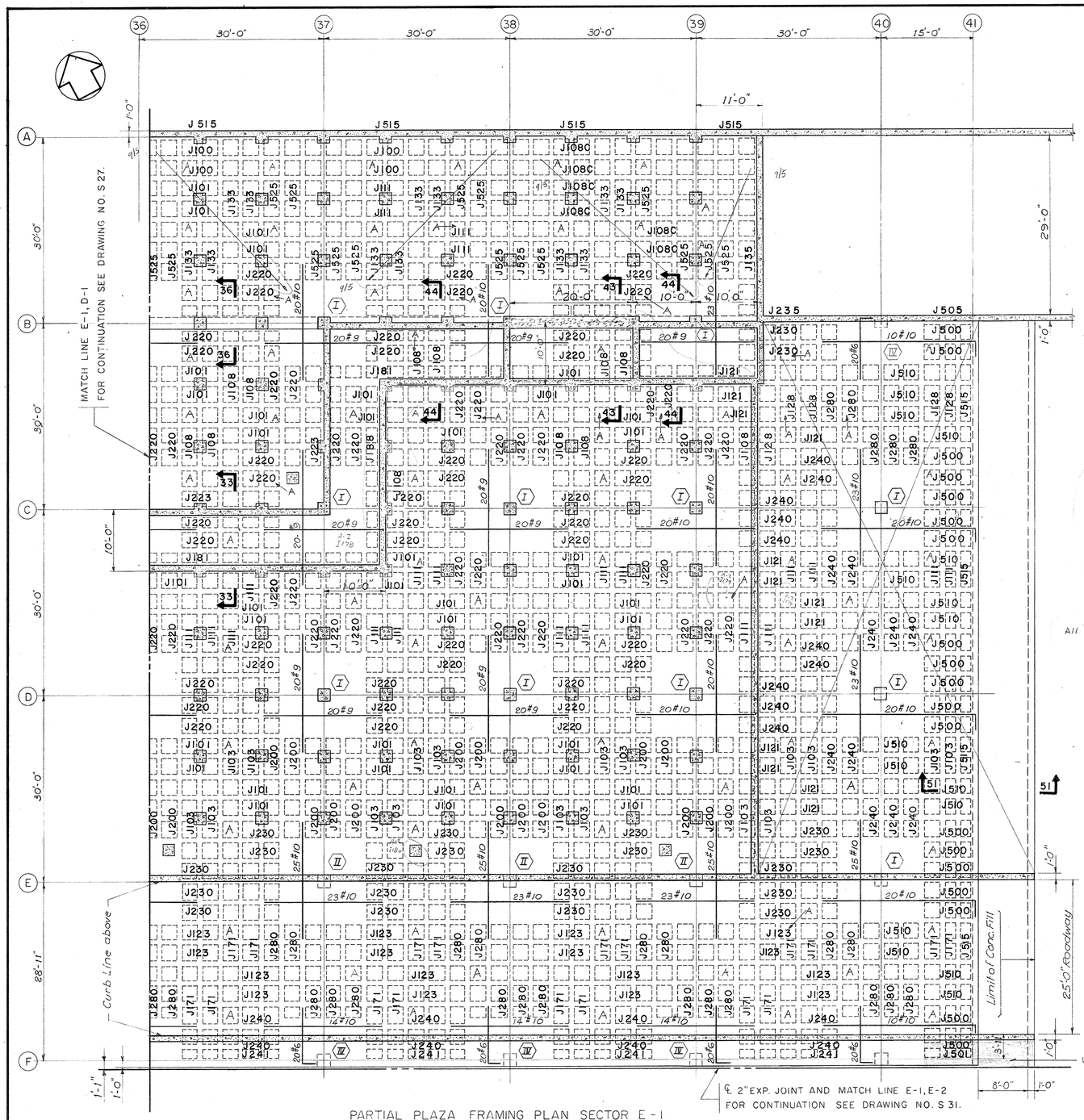

PARTIAL PLAZA FRAMING PLAN SECTOR E-1
Scale : 1/8" = 1'-0"

NOTE: TOP STEEL IN JOISTS MARKED C TO BE EXTEND TO END OF CANTILEVER

SECTION 41-41
Scale ½" = 1'-0"

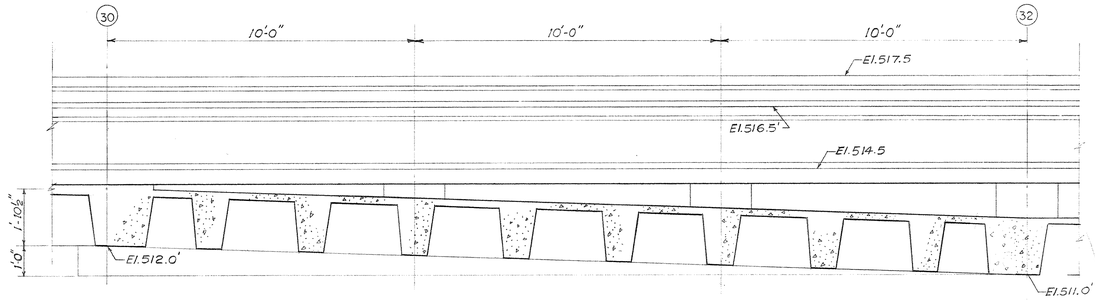

SECTION 45-45
Scale ½" = 1'-0"

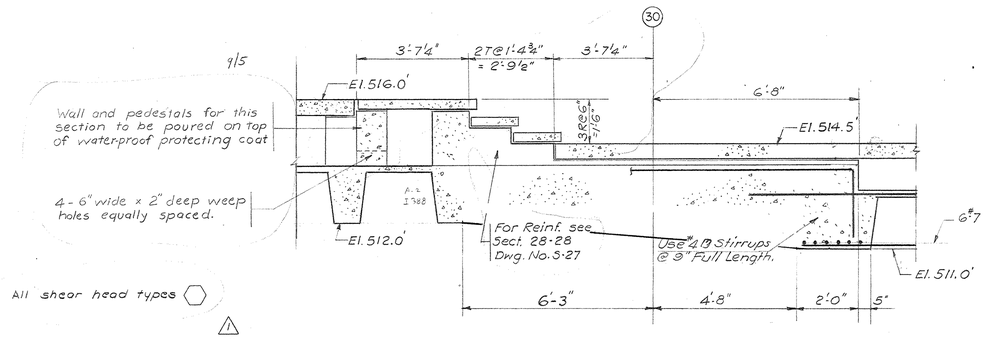

SECTION 45'-45'
Scale ½" = 1'-0"

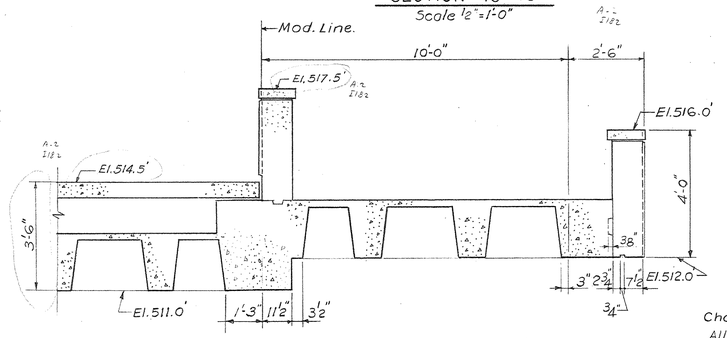

For Reinf. Details see Sect. 41-41.

SECTION 42-42
Scale ½" = 1'-0"

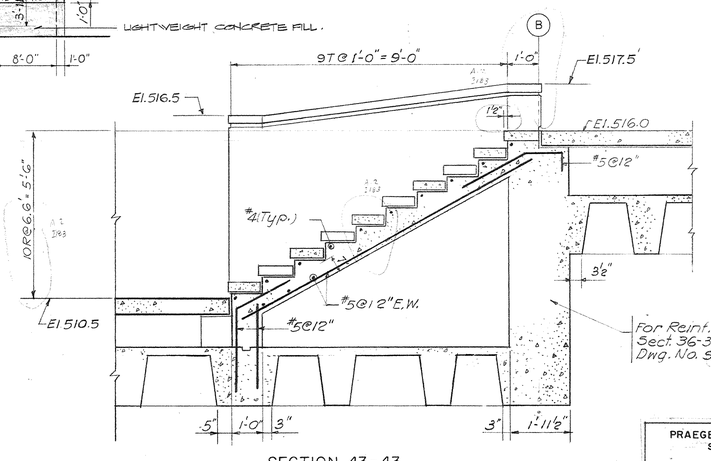

SECTION 43-43
Scale ½" = 1'-0"

Change Proposal No. 1
All circled areas noted thus △ Item No.

B-1	C-1	D-1	E-1
B-2	C-2	D-2	E-2
B-3	C-3	D-3	E-3

KEY PLAN
No Scale
TRACINGS CONFORMED TO ADDENDA 11-1-67
9/5/67

PRAEGER-KAVANAGH-WATERBURY
STRUCTURAL-ENGINEERS
R.Q. PRAEGER, Partner

STATE OF KENTUCKY
RICHARD Q. PRAEGER
No. 6175
REGISTERED PROFESSIONAL ENGINEER

CAPITAL PLAZA OFFICE BUILDING
FRANKFORT, KENTUCKY

DRAWN BY	PARTIAL PLAZA FRAMING PLAN	DATE 15 MAY 67
TRACED BY	ARCHITECT EDWARD DURELL STONE 7 EAST 67TH STREET NEW YORK N.Y.	SCALE AS NOTED
CHECKED BY JT		COMM. NO. 5006G
SECTOR NO. E1 CPA-15	ASSOCIATE ARCHITECTS & ENGINEERS LEE POTTER SMITH & ASSOCIATES 314 WILKINSON FRANKFORT, KENTUCKY	DRAWING NO. S 30
	COMMONWEALTH OF KENTUCKY DEPARTMENT OF FINANCE – ENGINEERING STAFF FRANKFORT, KENTUCKY	OF 71
APPROVED BY	ARCHITECT	DATE
APPROVED BY	AGENCY HEAD	DATE
APPROVED BY	OWNER	DATE

CPA-106

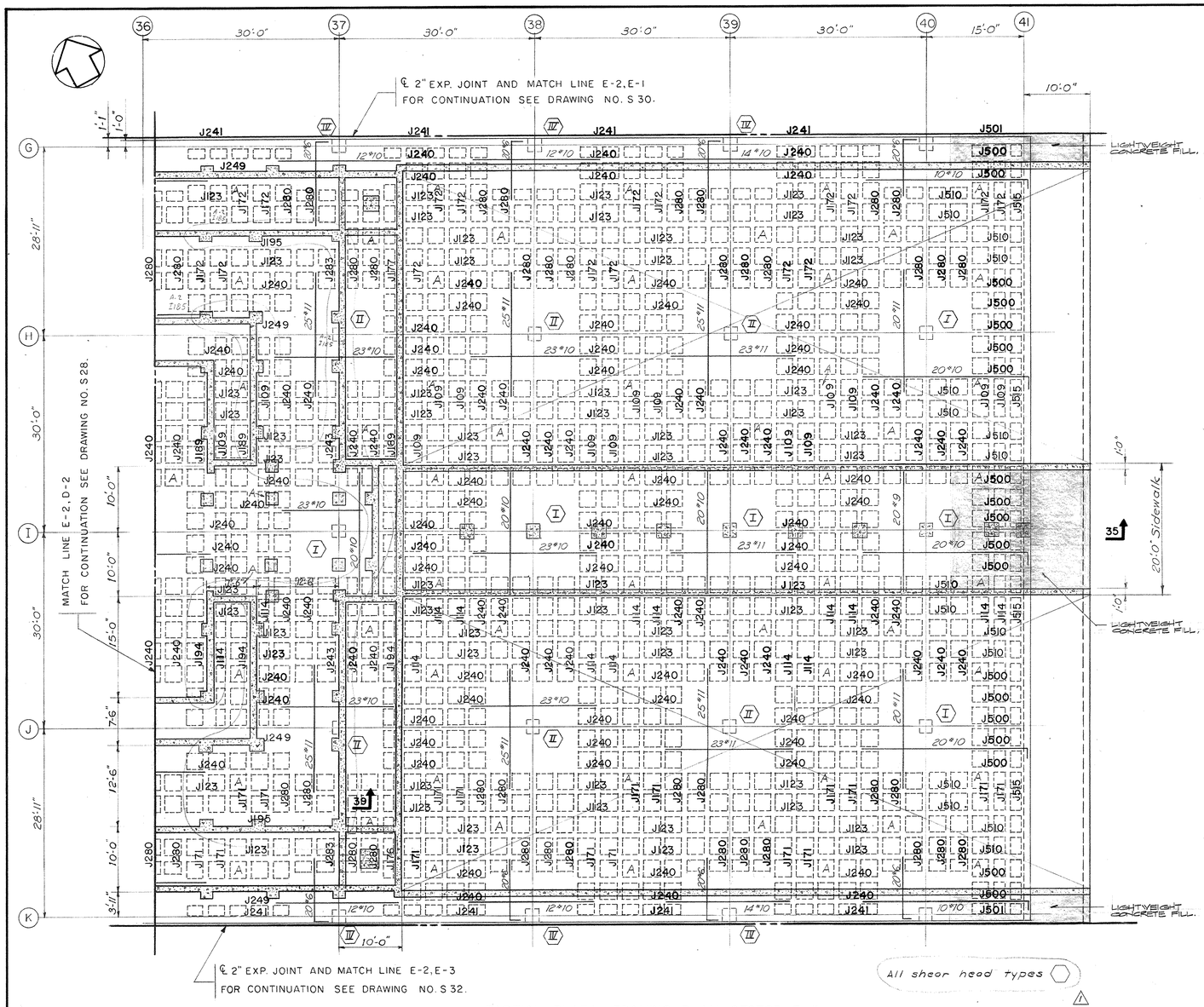

PARTIAL PLAZA FRAMING PLAN SECTOR E-2
Scale 1/8" = 1'-0"

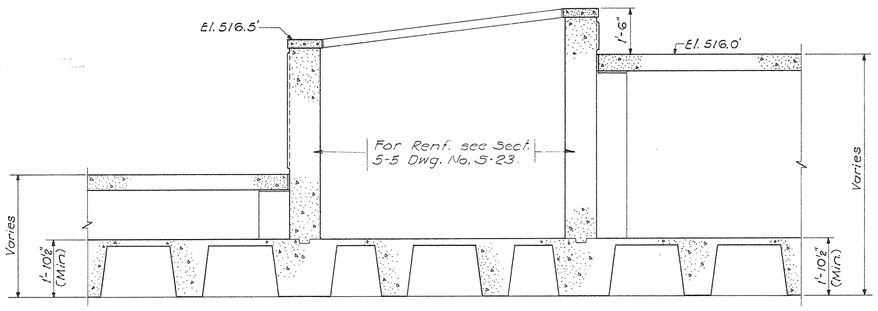

SECTION 33-33
Scale: 3/8" = 1'-0"

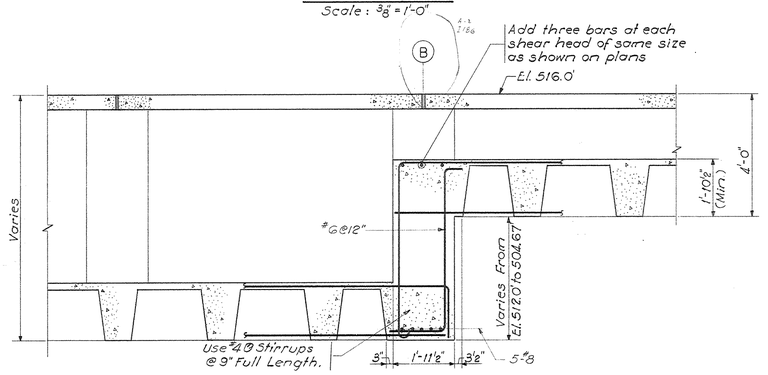

SECTION 36-36
Scale: 1/2" = 1'-0"

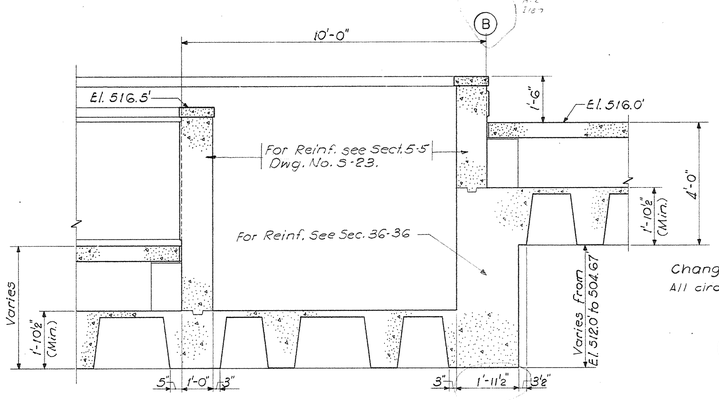

SECTION 44-44
Scale: 1/2" = 1'-0"

Change Proposal No. 1
All circled areas noted thus △1 Item No

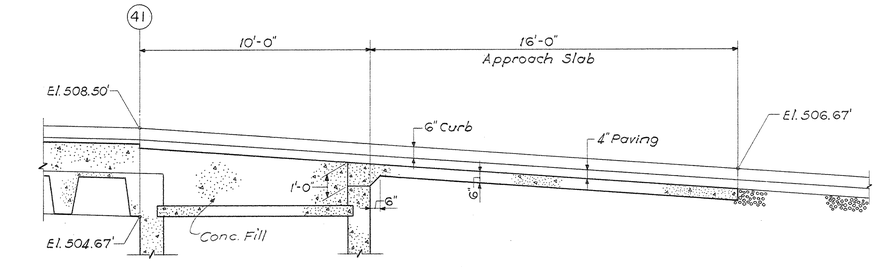

SECTION 48-48
Scale: 3/8" = 1'-0"

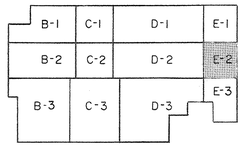

KEY PLAN
No Scale

TRACINGS CONFORMED TO ADDENDA 11-1-67

AS-BUILT DRAWINGS
DATE: JAN 7 '73
HUGH, CARTER & BLAKEMAN, INC.

STATE OF KENTUCKY
RICHARD Q. PRAEGER
No. 6175
REGISTERED PROFESSIONAL ENGINEER

PRAEGER-KAVANAGH-WATERBURY
STRUCTURAL-ENGINEERS
R. Q. PRAEGER, Partner

CAPITAL PLAZA OFFICE BUILDING
FRANKFORT, KENTUCKY

DRAWN BY J.M. & B.H.	PARTIAL PLAZA FRAMING PLAN	DATE 15 MAY 67
TRACED BY	ARCHITECT EDWARD DURELL STONE 7 EAST 67TH STREET NEW YORK N. Y.	SCALE AS NOTED
CHECKED BY J.I.		COMM. NO. 50066
SECTOR NO. E 2	ASSOCIATE ARCHITECTS & ENGINEERS LEE POTTER SMITH & ASSOCIATES 314 WILKINSON FRANKFORT, KENTUCKY	DRAWING NO. S 31
	COMMONWEALTH OF KENTUCKY DEPARTMENT OF FINANCE – ENGINEERING STAFF FRANKFORT, KENTUCKY	OF 71

APPROVED BY _____ ARCHITECT DATE _____
APPROVED BY _____ AGENCY HEAD DATE _____
APPROVED BY W. J. McConnell OWNER DATE MAY 24 1967

CPA-107

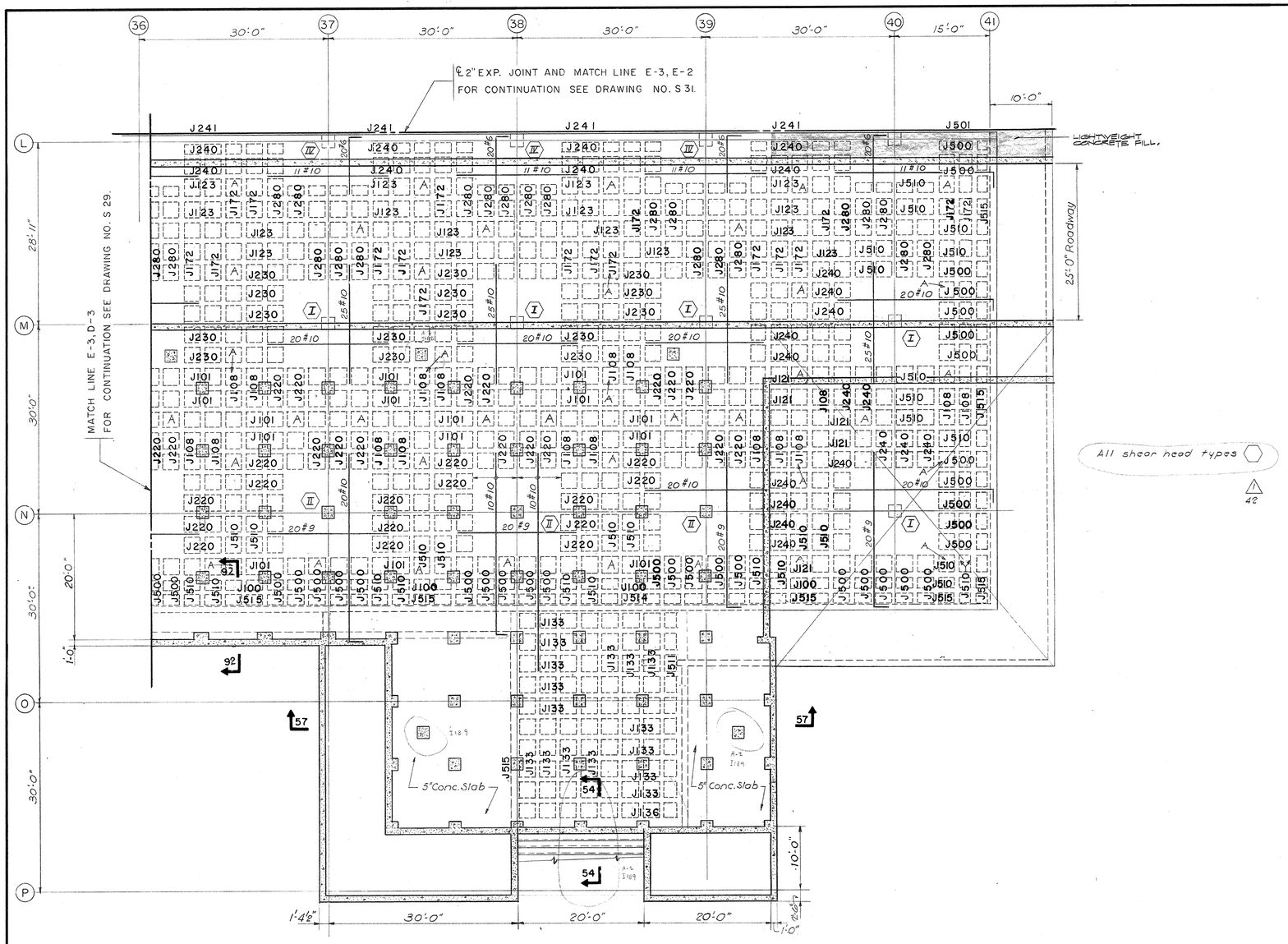

PARTIAL PLAZA FRAMING PLAN SECTOR E-3
Scale 1/8" = 1'-0"

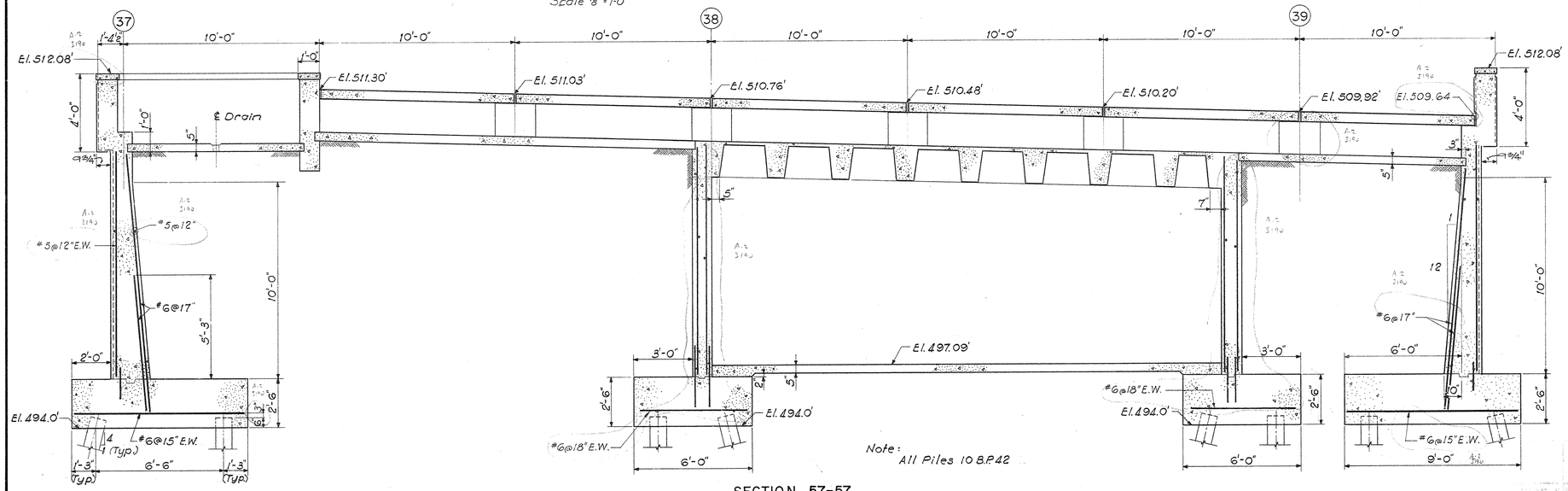

Note: All Piles 10 B.P. 42

SECTION 57-57
Scale: 3/8" = 1'-0"

Change Proposal No. 1
All circled areas noted thus △1
Item No.

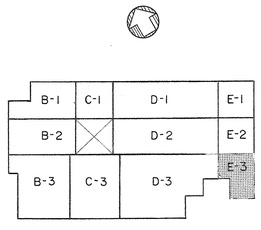

KEY PLAN
No Scale

TRACINGS CONFORMED TO ADDENDA 11-1-67

AS-BUILT DRAWINGS
DATE: JAN 73
HUGG, CARTER & BLAKEMAN, INC.

STATE OF KENTUCKY
RICHARD Q. PRAEGER
No. 6175
REGISTERED PROFESSIONAL ENGINEER

PRAEGER-KAVANAGH-WATERBURY
STRUCTURAL-ENGINEERS
R. Q. PRAEGER, Partner

CAPITAL PLAZA OFFICE BUILDING
FRANKFORT, KENTUCKY

DRAWN BY	PARTIAL PLAZA FRAMING PLAN	DATE 15 MAY 67
TRACED BY	ARCHITECT EDWARD DURELL STONE 7 EAST 67TH STREET NEW YORK N.Y.	SCALE AS NOTED
CHECKED BY J.T.		COMM. NO. 50066
SECTOR NO. E 3	ASSOCIATE ARCHITECTS & ENGINEERS LEE POTTER SMITH & ASSOCIATES 314 WILKINSON FRANKFORT, KENTUCKY	DRAWING NO. S 32
	COMMONWEALTH OF KENTUCKY DEPARTMENT OF FINANCE – ENGINEERING STAFF FRANKFORT, KENTUCKY	OF 71

APPROVED BY ARCHITECT DATE
APPROVED BY AGENCY HEAD DATE
APPROVED BY W. T. McConnell OWNER DATE MAY 24 1961

CPA-108

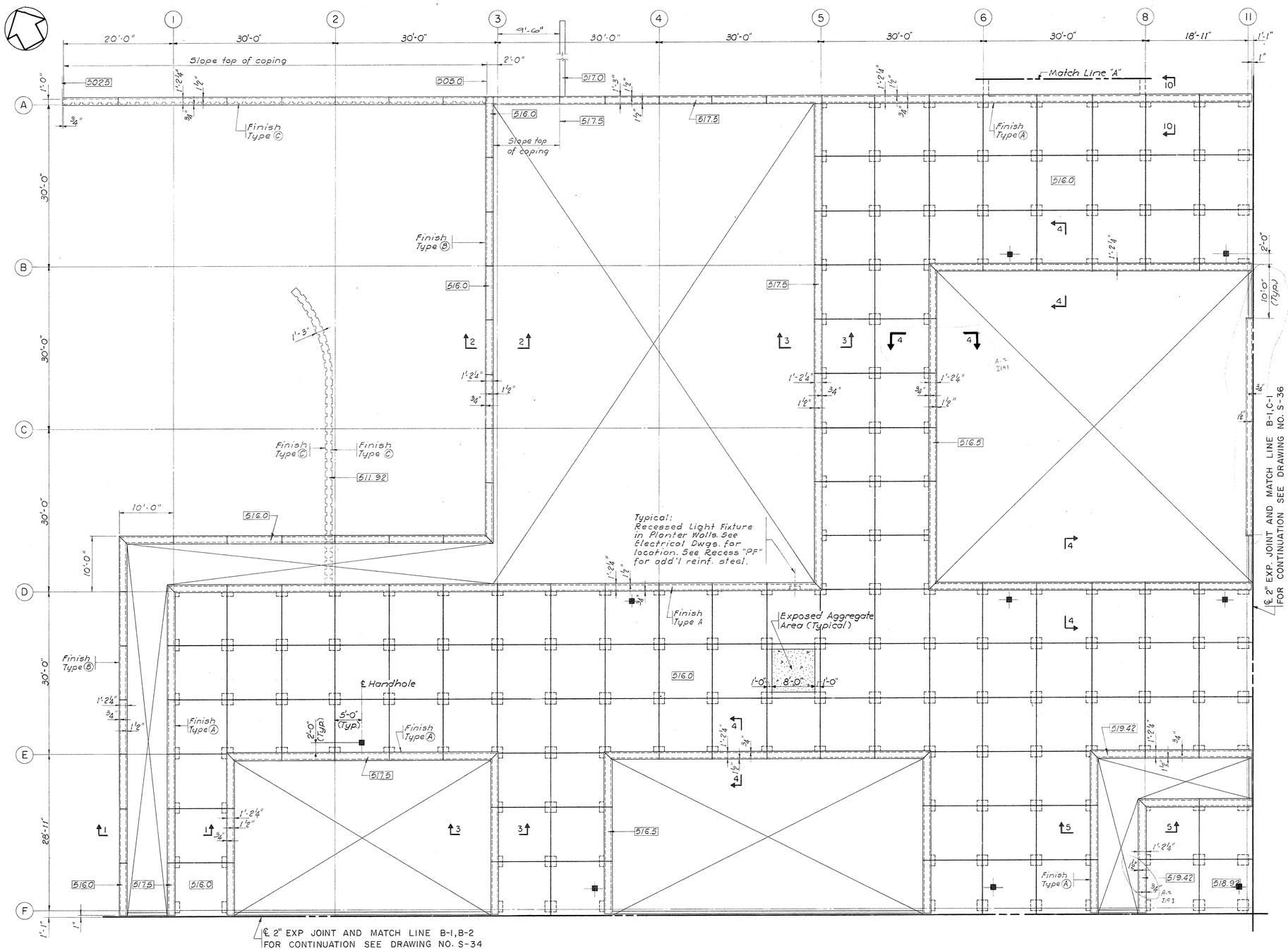

PARTIAL PLAZA LEVEL PLAN SECTOR B-1
Scale: 1/8" = 1'-0"

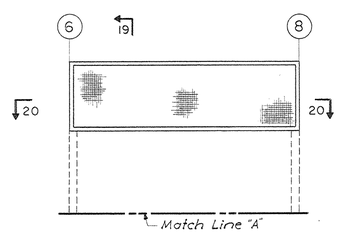

19 FAN ROOM
Scale: 1/8" = 1'-0"

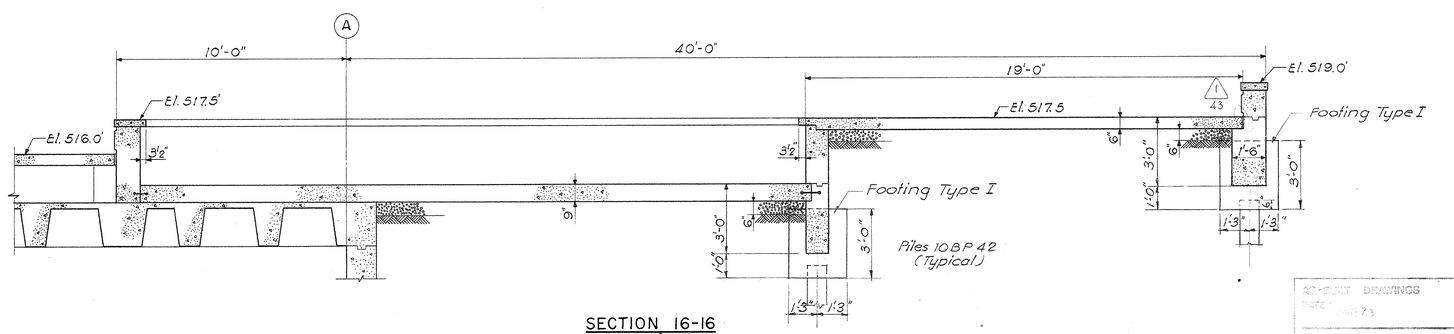

SECTION 16-16
Scale: 3/8" = 1'-0"

Change Proposal No. 1
All circled areas noted thus (1) Item No.

B-1	C-1	D-1	E-1
B-2	C-2	D-2	E-2
B-3	C-3	D-3	E-3

KEY PLAN
No Scale
TRACINGS CONFORMED TO ADDENDA 11-1-67

CAPITAL PLAZA OFFICE BUILDING
FRANKFORT, KENTUCKY

DRAWN BY J.M.	PARTIAL PLAZA LEVEL PLAN	DATE 15 MAY 67
TRACED BY		SCALE AS NOTED
CHECKED BY J.S.	ARCHITECT EDWARD DURELL STONE, 7 EAST 67TH STREET NEW YORK N.Y.	COMM. NO. 50066
SECTOR NO. B1	ASSOCIATE ARCHITECTS & ENGINEERS LEE POTTER SMITH & ASSOCIATES, 314 WILKINSON FRANKFORT, KENTUCKY	DRAWING NO. S 33
	COMMONWEALTH OF KENTUCKY, DEPARTMENT OF FINANCE – ENGINEERING STAFF, FRANKFORT, KENTUCKY	OF 71

APPROVED BY ARCHITECT — DATE
APPROVED BY AGENCY HEAD — DATE
APPROVED BY OWNER — DATE MAY 24 1967

STATE OF KENTUCKY — RICHARD Q. PRAEGER — No. 6175 — REGISTERED PROFESSIONAL ENGINEER

PRAEGER-KAVANAGH-WATERBURY
STRUCTURAL-ENGINEERS
R.Q. PRAEGER, Partner

AS-BUILT DRAWINGS
DATE 1973
HUGO, CARTER & BLAKEMAN, INC.

CPA-109

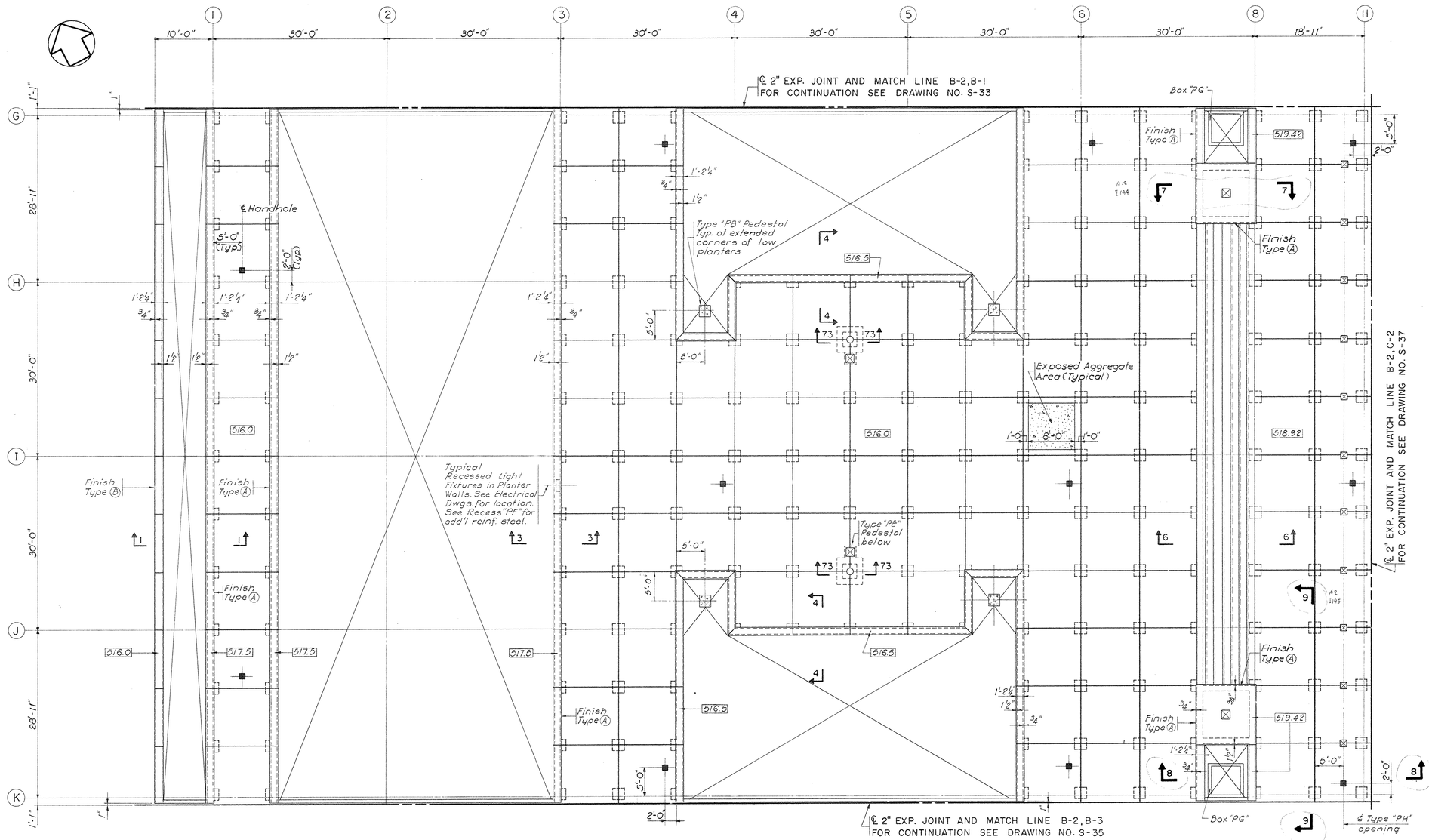

PARTIAL PLAZA LEVEL PLAN SECTOR B-2
Scale: 1/8" = 1'-0"

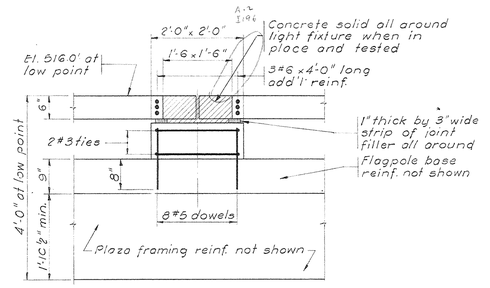

TYPE "PE" PEDESTAL
Scale: 3/4" = 1'-0"

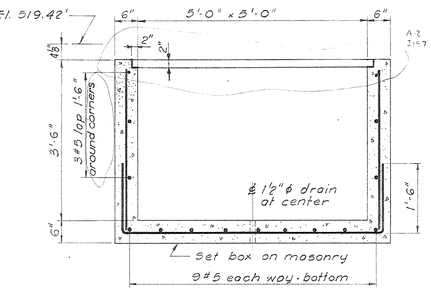

BOX "PG"
Scale: 3/4" = 1'-0"

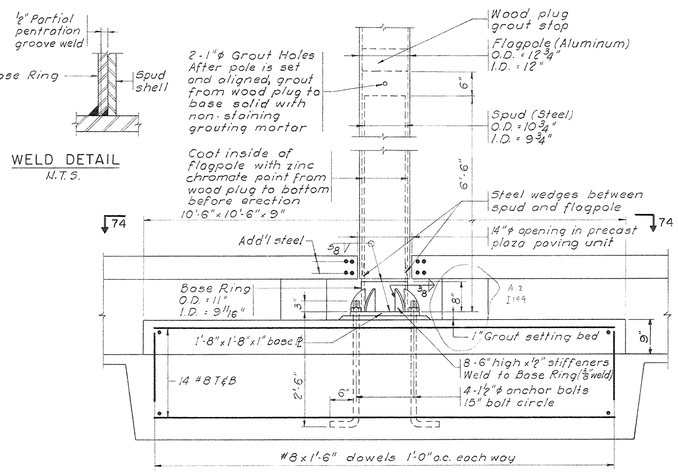

WELD DETAIL
N.T.S.

FLAGPOLE BASE
SECTION 73-73
Scale: 3/4" = 1'-0"

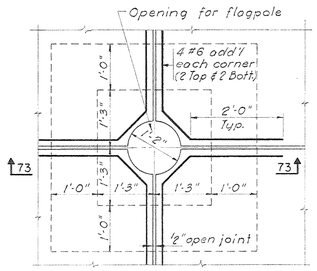

SECTION 74-74
Scale: 3/4" = 1'-0"

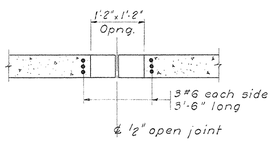

TYPE "PH" OPENING
Scale: 3/4" = 1'-0"

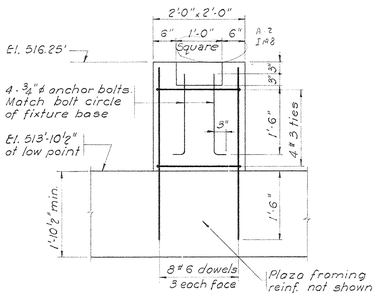

TYPE "PB" PEDESTAL
Scale: 3/4" = 1'-0"

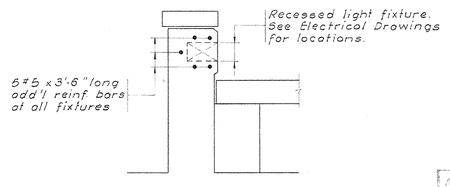

RECESS "PF"
Scale: 3/4" = 1'-0"

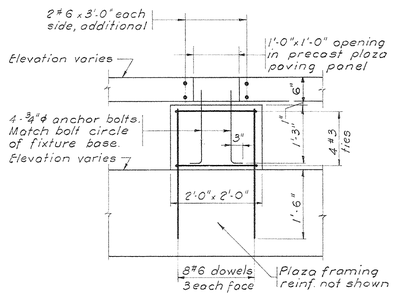

TYPE "PC" PEDESTAL
Scale: 3/4" = 1'-0"

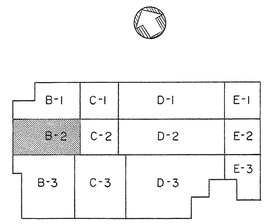

KEY PLAN
No Scale

TRACINGS CONFORMED TO ADDENDA 11-1-67

CAPITAL PLAZA OFFICE BUILDING

FRANKFORT, KENTUCKY

DRAWN BY J.M.	PARTIAL PLAZA LEVEL PLAN	DATE 15 MAY 67
TRACED BY J.S.	ARCHITECT EDWARD DURELL STONE 7 EAST 67TH STREET NEW YORK N.Y.	SCALE AS NOTED
CHECKED BY J.S.		COMM. NO. 50066
SECTOR NO. B2	ASSOCIATE ARCHITECTS & ENGINEERS LEE POTTER SMITH & ASSOCIATES 314 WILKINSON FRANKFORT, KENTUCKY	DRAWING NO. S 34
	COMMONWEALTH OF KENTUCKY DEPARTMENT OF FINANCE – ENGINEERING STAFF FRANKFORT, KENTUCKY	OF 71

APPROVED BY _____ ARCHITECT DATE _____

APPROVED BY _____ AGENCY HEAD DATE MAY 26 1967

APPROVED BY _____ OWNER DATE _____

STATE OF KENTUCKY ★ RICHARD Q. PRAEGER No. 6175 ★ REGISTERED PROFESSIONAL ENGINEER

PRAEGER-KAVANAGH-WATERBURY
STRUCTURAL-ENGINEERS
R.Q. PRAEGER, Partner

AS-BUILT DRAWINGS
MARCH ... 19...
H.B.G., CARTER & BLAKEMAN, INC.

CPA-110

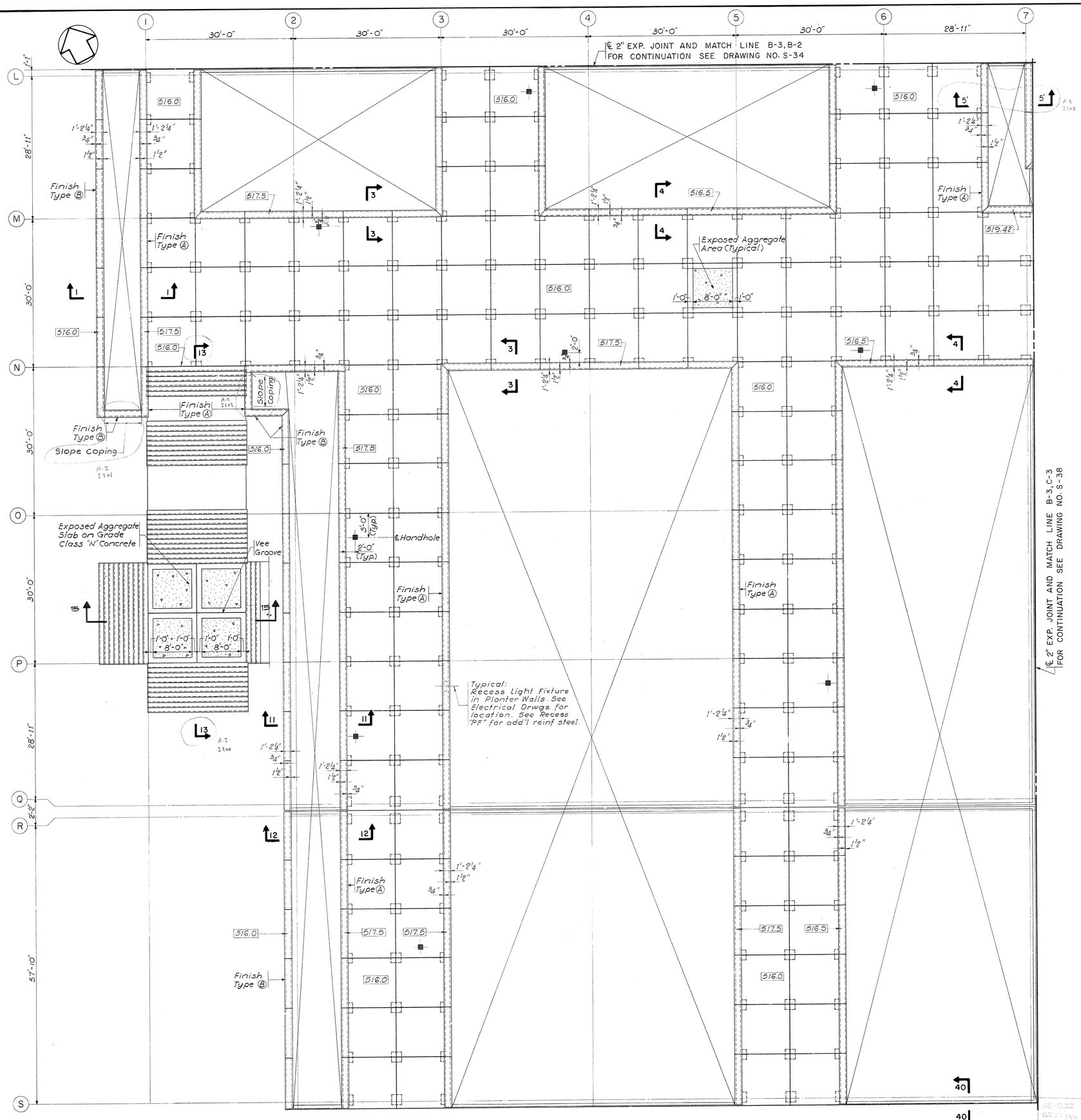

PARTIAL PLAZA LEVEL PLAN SECTOR B-3

Scale: 1/8" = 1'-0"

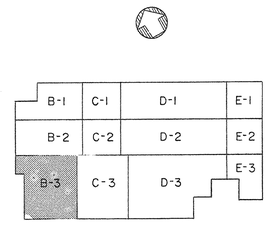

KEY PLAN

No Scale

TRACINGS CONFORMED TO ADDENDA 11-1-67

CAPITAL PLAZA OFFICE BUILDING

FRANKFORT, KENTUCKY

DRAWN BY J.M.	PARTIAL PLAZA LEVEL PLAN	DATE 15 MAY 67
TRACED BY	ARCHITECT EDWARD DURELL STONE 7 EAST 67TH STREET NEW YORK N. Y.	SCALE AS NOTED
CHECKED BY J.I.		COMM. NO. 50066
SECTOR NO. B3	ASSOCIATE ARCHITECTS & ENGINEERS LEE POTTER SMITH & ASSOCIATES 314 WILKINSON FRANKFORT, KENTUCKY	DRAWING NO. S 35 OF 71
	COMMONWEALTH OF KENTUCKY DEPARTMENT OF FINANCE – ENGINEERING STAFF FRANKFORT, KENTUCKY	

STATE OF KENTUCKY RICHARD Q. PRAEGER No. 6175 REGISTERED PROFESSIONAL ENGINEER

PRAEGER-KAVANAGH-WATERBURY
STRUCTURAL-ENGINEERS
R.Q. PRAEGER, Partner

APPROVED BY ARCHITECT DATE
APPROVED BY AGENCY HEAD DATE
APPROVED BY OWNER DATE MAY 24 1967

CPA-111

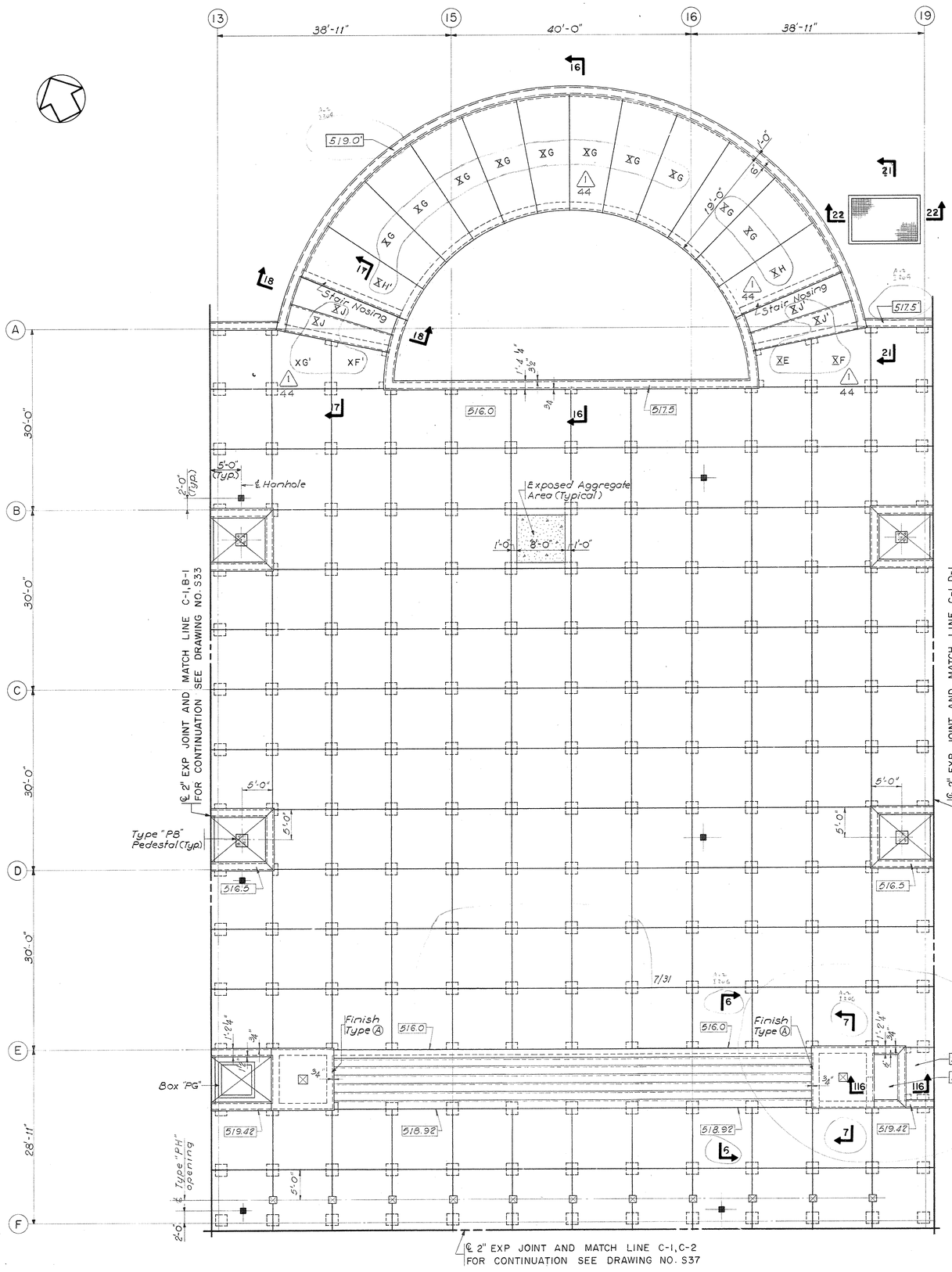

PARTIAL PLAZA LEVEL PLAN SECTOR C-1
Scale : 1/8" = 1'-0"

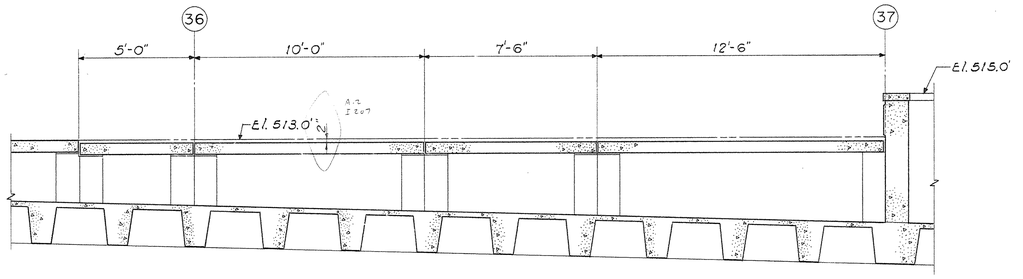

SECTION 39-39
Scale : 3/8" = 1'-0"

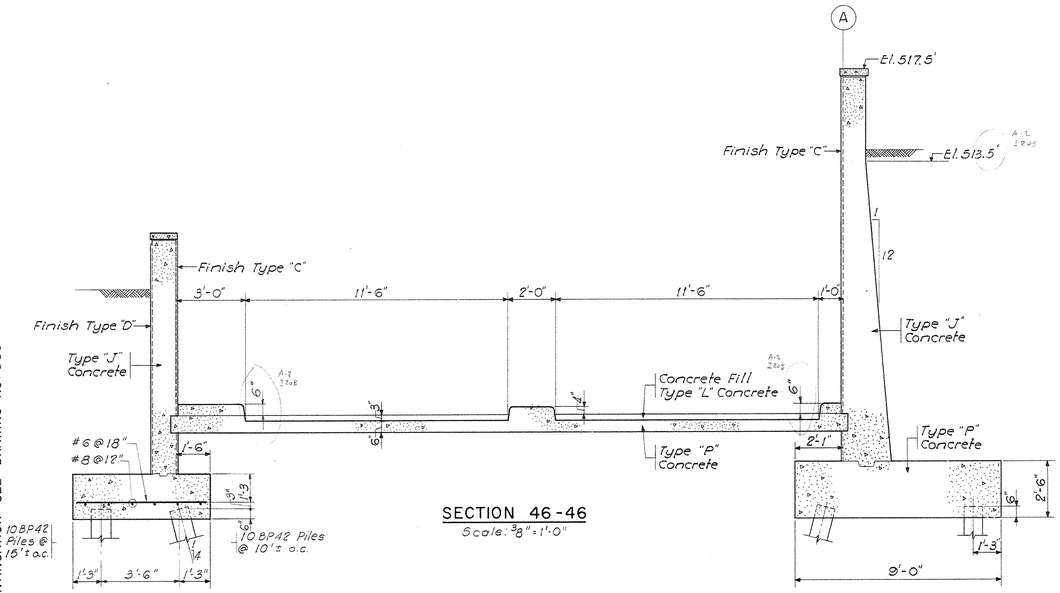

SECTION 46-46
Scale: 3/8" = 1'-0"

Change Proposal No. 1
All circled Areas noted thus (1) Item No.

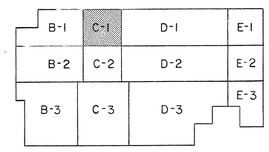

KEY PLAN
No Scale

July 31st 68
TRACINGS CONFORMED TO ADDENDA 11-1-67

CAPITAL PLAZA OFFICE BUILDING
FRANKFORT, KENTUCKY

DRAWN BY J.M.	PARTIAL PLAZA LEVEL PLAN	DATE 15 MAY 67
TRACED BY		SCALE AS NOTED
CHECKED BY J.I.	ARCHITECT EDWARD DURELL STONE 7 EAST 67TH STREET NEW YORK N.Y.	COMM. NO. 50066
SECTOR NO. C1	ASSOCIATE ARCHITECTS & ENGINEERS LEE POTTER SMITH & ASSOCIATES 314 WILKINSON FRANKFORT, KENTUCKY	DRAWING NO. S 36
	COMMONWEALTH OF KENTUCKY DEPARTMENT OF FINANCE – ENGINEERING STAFF FRANKFORT, KENTUCKY	OF 71

APPROVED BY ARCHITECT DATE
APPROVED BY DATE
APPROVED BY OWNER DATE MAY 26 1981

STATE OF KENTUCKY ★ RICHARD Q. PRAEGER ★ No. 6175 REGISTERED PROFESSIONAL ENGINEER

PRAEGER-KAVANAGH-WATERBURY
STRUCTURAL-ENGINEERS
R.Q. PRAEGER, Partner

AS BUILT DRAWINGS
HUGG, CARTER & FLANIGAN, INC.

CPA-112

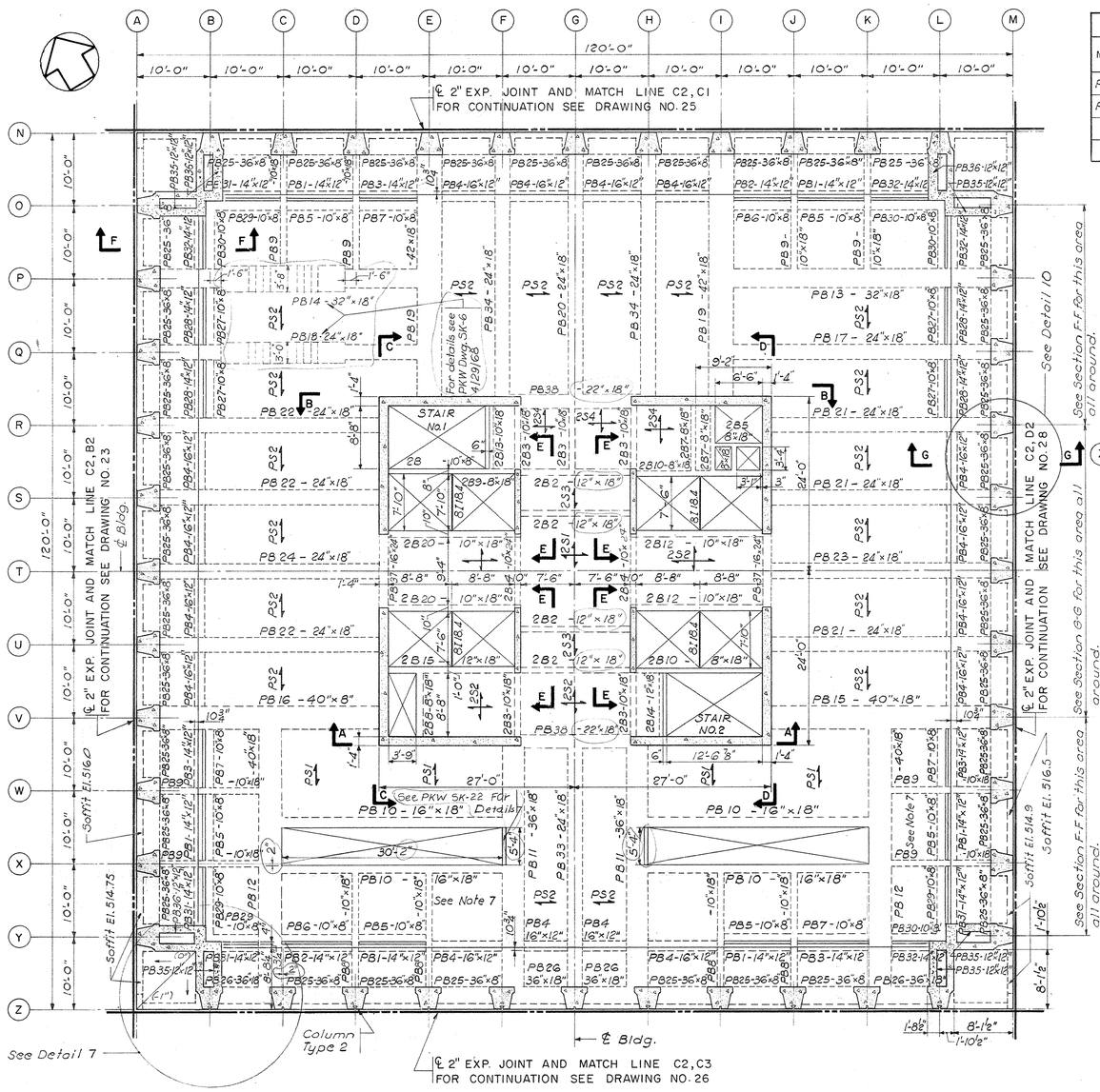

PARTIAL PLAZA LEVEL PLAN SECTOR C-2

DATUM – TOP OF FINISHED FLOOR ELEV. 519'-0"

Scale: 1/8" = 1'-0"

SLAB SCHEDULE

MARK	SIZE	TOP STEEL LW	TOP STEEL SW	BOTTOM STEEL LW	BOTTOM STEEL SW	REMARKS
PS1	4"	#3@12"	#4@8"	#3@12"	#5@6"	
PS2	4"	#3@12"	#3@8"	#3@12"	#4@8"	

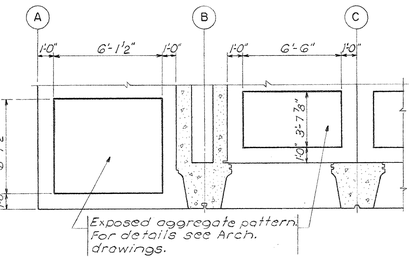

DETAIL 7

Scale: 1/4" = 1'-0"

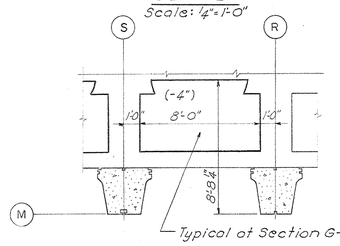

DETAIL 10

Scale: 1/4" = 1'-0"

PLAZA LEVEL BEAM SCHEDULE

MARK	SIZE	STEEL	LOCATION	FACE WEST OR SOUTH SUPPORT	FACE EAST OR NORTH SUPPORT	STIRRUPS OR TIES SIZE & SPACING	STIRRUPS OR TIES TYPE	REMARKS
PB1	14"×12"	4-#5	Top	1'-3" 8" 9'-2"	9'-2" 8" 1'-3"	#3@8"		
		3-#8	Bot.					
PB2	14"×12"	4-#5	Top	2'-0" 2'-0" Varies	8" 1'-3"	#3@8"		PB3 Opposite hand
PB3		3-#8	Bot.		8"			
PB4	16"×12"	4-#5	Top	1'-10" 1'-10" Varies	1'-10" 1'-10"	#3@8"		
		3-#8	Bot.					
PB5	10"×8"	2-#6	Top	1'-3" 8" 9'-2"	8" 1'-3"	#3@8"		A-2 1216
		2-#8	Bot.		8"			
PB6	10"×8"	2-#6	Top	2'-0" 2'-0" Varies	8" 1'-3"	#3@8"		PB7 Opposite hand
PB7		2-#8	Bot.		8"			
PB8	10"×18"	3-#6	Top	1'-3" 2'-3" 2'-0" 15'-6"	2'-0" 1'-3"	#3@8"		
		3-#8	Bot.		1'-0"			
PB9	10"×18"	3-#6	Top	1'-3" 2'-3" 2'-0" Varies	2'-3" 1'-3"	#3@8"		
		3-#8	Bot.		2'-0"			
PB10	16"×18"	5-#7	Top	1'-3" 2'-8" 2'-0" 30'-0"	2'-8" 1'-3" 2'-0"	#4@8"		
		5-#10	Bot.					
PB11	36"×18"	11-#8	Top	1'-3" 2'-8" 2'-8" 33'-0"	2'-0" 1'-2" 2'-0"	#4@7"		
		11-#11	Bot.					
PB12	40"×18"	13-#8	Top	1'-3" 2'-8" 2'-6" 35'-4"	3'-0" 1'-3" 2'-0"	#4@8"		
		13-#11	Bot.					
PB13	32"×18"	9-#8	Top	1'-3" 3'-0" 2'-6" 35'-3"	1'-0" 2'-8" 5'-0" 2'-0"	#4@8"		PB14 Opposite hand
PB14		9-#11	Bot.					
PB15	40"×18"	13-#8	Top	5'-0" 1'-2" 3'-0" 30'-0"	3'-0" 2'-8" 1'-2" 2'-8" 5'-0"	#4@8"		PB16 Opposite hand
PB16		13-#11	Bot.					
PB17	24"×18"	6-#8	Top	1'-3" 3'-0" 2'-6" 35'-3"	2'-8" 1'-3" 2'-0"	#4@7"		PB18 Opposite hand
PB18		9-#9	Bot.					
PB19	42"×18"	14-#8	Top	5'-0" 1'-2" 3'-0" 33'-0"	1'-0" 2'-8" 5'-0" 2'-0"	#4@7"		
		14-#11	Bot.					
PB20	24"×18"	8-#7	Top	1'-3" 1'-2" 1'-0" 33'-0"	2'-8" 4'-6" 2'-0"	#4@7"		PB20 Opposite hand
PB33		8-#9	Bot.					
PB21	24"×18"	8-#6	Top	PB21 4'-6" 1'-2" 3'-0" 30'-0"	1'-0" 2'-8" 4'-6"	#4@7"		PB22 & PB24 Opposite hand
PB22		8-#6	Top	PB23 1'-3" 1'-2" 1'-0" 30'-0"	1'-0" 2'-8" 4'-6" 2'-0"			
PB23		8-#8	Bot.					
PB24								
PB27	10"×8"	2-#6	Top	1'-3" 1'-10" 1'-6" 8'-0"	1'-10" 1'-3" 1'-6"	#3@8"		
		2-#8	Bot.					
PB25	36"×8"	6-#8	Top	3'-0" 2'-4" 6'-7"	3'-0" 2'-4"	#4@8"		
PB26	36"×18"	6-#8	Bot.					
PB28	14"×12"	4-#5	Top	1'-10" 1'-6" Varies	1'-10" 1'-6"	#3@8"		
		3-#8	Bot.					
PB29	10"×8"	2-#6	Top	1'-3" 1'-0" Varies	2'-3" 1'-3" 8"	#3@8"		PB30 Opposite hand
PB30		2-#8	Bot.					
PB31	14"×12"	4-#5	Top	2'-3" 1'-6" Varies	2'-3" 1'-6"	#3@8"		PB32 Opposite hand
PB32		3-#8	Bot.					
PB34	24"×18"	8-#7	Top	A-2 1216 4'-6" 1'-9" 1'-2" 3'-0" 33'-0"	1'-0" 2'-8" 4'-6" 2'-0"	#4@7"		
		8-#9	Bot.					
PB35	12"×12"	2-#8	Top	2'-3" 2'-0" 4'-9½"	1'-0" 1'-0"	#3@8"		PB36 Opposite hand
PB36		2-#8	Bot.					
PB37	16"×24"	3-#10	Top	4'-0" 1'-0" 10'-0"	4'-0" 1'-0"	#4@6"		
		4-#10	Bot.					
PB38	22"×18"	4-#10	Top	1'-6" 1'-0" 15'-0"	1'-6" 1'-0"	#4@3"		
		7-#10	Bot.					

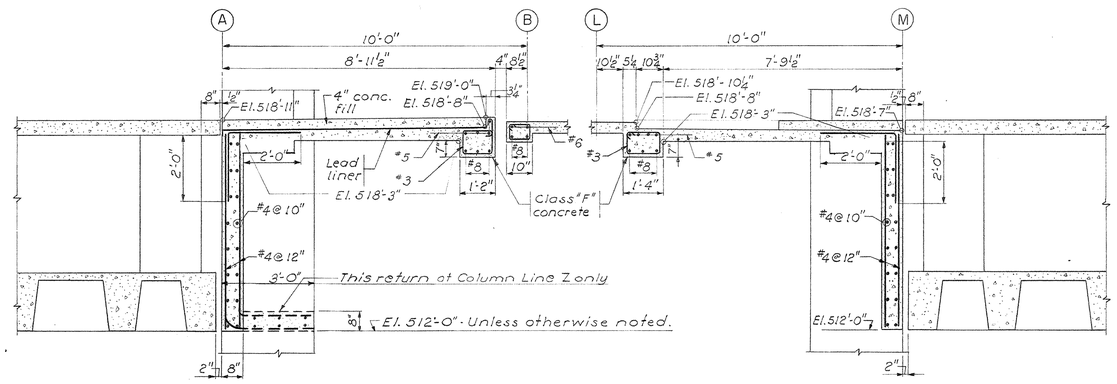

SECTION F-F

Scale: 1/2" = 1'-0"

SECTION G-G

Scale: 1/2" = 1'-0"

NOTES

1. For General Notes and Typical Details, Dwg. No. S-57.
2. For Column Schedule and Corner Wall Details, see Dwg. No. S-52.
3. For Stairs No.1 & No.2, see Dwg. No. S-55. A-2
4. For Sections A-A, B-B, C-C, D-D, & E-E, see Dwg. No. S-56.
5. The top of the Structural slab is (-1¾") unless otherwise noted.
6. All concrete slabs are 4" thick unless otherwise noted.
7. All Slabs not marked have #3 @ 12" LW and #4 @ 12" SW Top & Bot.
8. For core beams and slab schedules see Dwg. No. S46.
9. For additional reinforcing steel at beam openings see Dwg. No. S49.

LOAD SCHEDULE

Dead Load *

4" Slab	39 psf
1¾" Terrazzo	24 psf
Hung Ceiling	10 psf
Mechanical	5 psf
	78 psf
Live Load	100 psf

* Beams & Partitions included separately

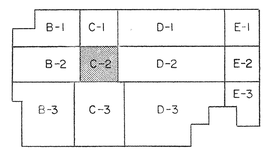

KEY PLAN

No Scale

TRACINGS CONFORMED TO ADDENDA 11-1-67

STATE OF KENTUCKY RICHARD Q. PRAEGER No. 6175 REGISTERED PROFESSIONAL ENGINEER

AS-BUILT DRAWINGS DATE: HUGG, CARTER & BLAKEMAN, INC.

PRAEGER-KAVANAGH-WATERBURY STRUCTURAL-ENGINEERS

R.Q. PRAEGER, Partner

CAPITAL PLAZA OFFICE BUILDING

FRANKFORT, KENTUCKY

DRAWN BY	PARTIAL PLAZA LEVEL PLAN	DATE 15 MAY 67
TRACED BY	ARCHITECT EDWARD DURELL STONE 7 EAST 67TH STREET NEW YORK N.Y.	SCALE AS NOTED
CHECKED BY J.Z.		COMM. NO. 5006.0
SECTOR NO. C2	ASSOCIATE ARCHITECTS & ENGINEERS LEE POTTER SMITH & ASSOCIATES 314 WILKINSON FRANKFORT, KENTUCKY	DRAWING NO. S 37
	COMMONWEALTH OF KENTUCKY DEPARTMENT OF FINANCE – ENGINEERING STAFF FRANKFORT, KENTUCKY	OF 71

APPROVED BY ARCHITECT DATE

APPROVED BY DEPARTMENT OF FINANCE DATE JAN 26 1968

APPROVED BY OWNER DATE

CPA-113

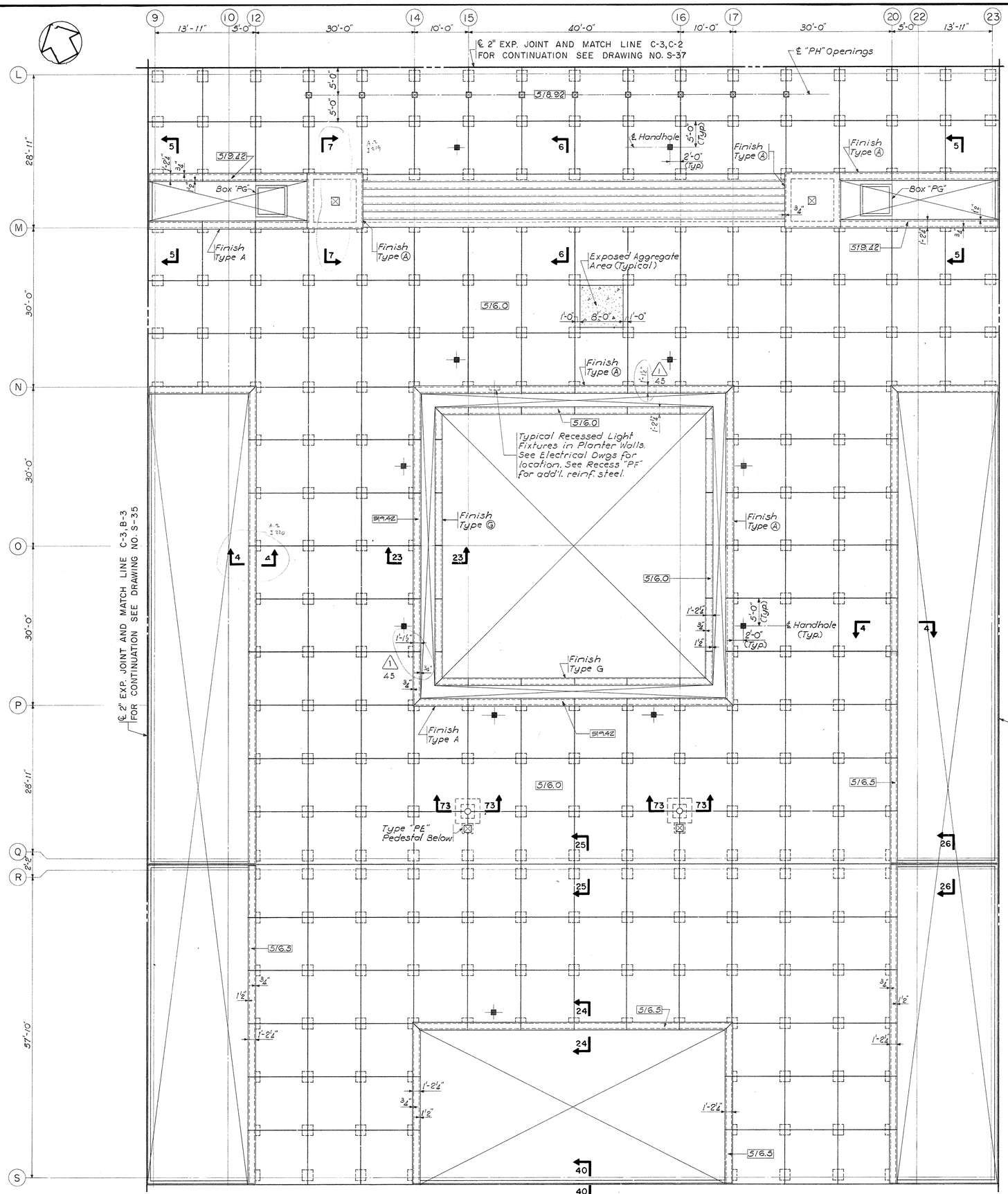

PARTIAL PLAZA LEVEL PLAN SECTOR C-3

Scale : ⅛"=1'-0"

Change Proposal No. 1

All Circled Areas noted thus △ Item No.

B-1	C-1	D-1	E-1
B-2	C-2	D-2	E-2
B-3	C-3	D-3	E-3

KEY PLAN

No Scale

TRACINGS CONFORMED TO ADDENDA 11-1-67

CAPITAL PLAZA OFFICE BUILDING

FRANKFORT, KENTUCKY

DRAWN BY J.M.	PARTIAL PLAZA LEVEL PLAN	DATE 15 MAY 67
TRACED BY	ARCHITECT EDWARD DURELL STONE 7 EAST 67TH STREET NEW YORK N.Y.	SCALE AS NOTED
CHECKED BY J.S.		COMM. NO 5006
SECTOR NO. C3	ASSOCIATE ARCHITECTS & ENGINEERS LEE POTTER SMITH & ASSOCIATES 314 WILKINSON FRANKFORT, KENTUCKY	DRAWING NO. S 38
CPA-15	COMMONWEALTH OF KENTUCKY DEPARTMENT OF FINANCE – ENGINEERING STAFF FRANKFORT, KENTUCKY	OF 71

APPROVED BY _____ ARCHITECT DATE _____

APPROVED BY _____ DATE _____

APPROVED BY _____ OWNER DATE MAY 26 1967

STATE OF KENTUCKY ★ RICHARD Q. PRAEGER No. 6175 REGISTERED PROFESSIONAL ENGINEER ★

AS-BUILT DRAWINGS
DATE: 1967
HUNT, CARTER & FLEMING, INC.

PRAEGER-KAVANAGH-WATERBURY
STRUCTURAL-ENGINEERS
R.Q. PRAEGER, Partner

CPA-114

21 18'-11" 24 30'-0" 26 30'-0" 27 30'-0" 28 30'-0" 29 30'-0" 30 30'-0" 32 30'-0" 33 15'-9" 34 14'-3" 35 30'-0" 36

Match Line "B"

A B C D E F

30'-0" 30'-0" 30'-0" 30'-0" 28'-11"

℄ 2" EXP. JOINT AND MATCH LINE D-1, C-1 FOR CONTINUATION SEE DRAWING NO. S-36

MATCH LINE D-1, E-1 FOR CONTINUATION SEE DRAWING NO. S-42

516.0 516.5 517.5 514.5 513.91 513.66 514.33 513.88 519.42 517.46 518.92 516.0 516.5 517.5 514.5

Finish Type (A)

℄ Handhole Typical

5'-0" 2'-0" 10'-0" 3/4" 1/2" A-2 1221

Exposed Aggregate Area

Typical: Recessed Light Fixture in Planter Walls See Electrical Dwgs. for location. See Recess "PF" for add'l reinf steel

1'-2 1/4" 1 1/2" 3/4" 1'-2 1/4" 1/8" 3/4"

Slope Coping

1'-0" 8'-0" 1'-0"

Exposed Aggregate Area (Typical)

PC "Pedestal"

Stair S3

Slope

Ramp Dn

Finish Type A - See Archtl Dwgs for pattern

2'-0" x 3'-0" opng

26'-3 1/2"

Vee Groove

Concrete Fill Class "L" Concrete Welded Fabric Reinft 66-88

2" EXPANSION JOINT

Type "PC" Pedestal below

Typical Exposed Aggregate Areas

1'-24" 1'-12" 1'-24" 1/2" 3/4" 1'-24" 1 1/2"

A-2 1224 A-2 1223 A-2 1226 A-2 1227

2'-0" 5'-0" 2'-0" 5'-0"

7/31

℄ 2" EXP. JOINT AND MATCH LINE D-1, D-2 FOR CONTINUATION SEE DRAWING NO. S-40

PARTIAL PLAZA LEVEL SECTOR D-1

Scale: 1/8" = 1'-0"

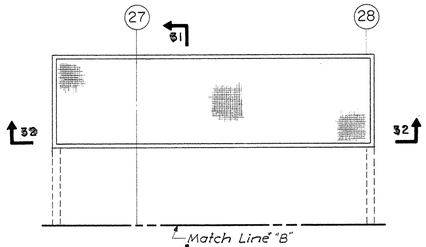

FAN ROOM

Scale: 1/8" = 1'-0"

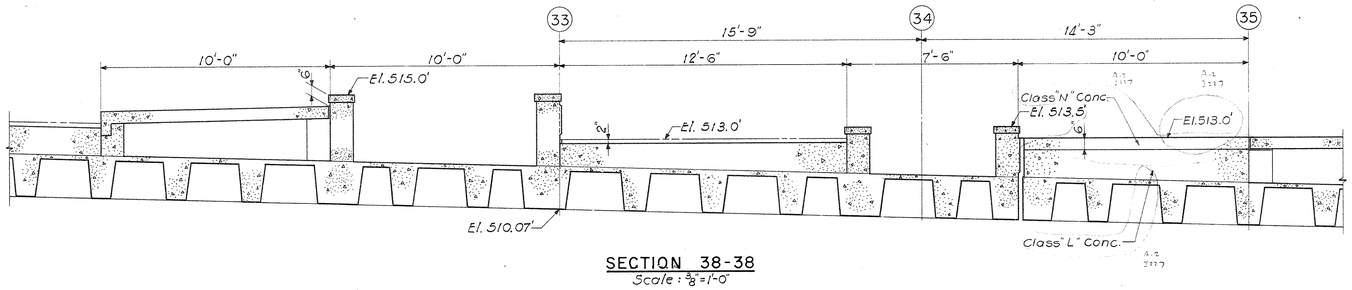

SECTION 38-38

Scale: 3/8" = 1'-0"

B-1	C-1	D-1	E-1
B-2	C-2	D-2	E-2
B-3	C-3	D-3	E-3

KEY PLAN

No Scale

9/10/68
July 3rd '68
7-26-68
TRACINGS CONFORMED TO ADDENDA 11-1-67

CAPITAL PLAZA OFFICE BUILDING

FRANKFORT, KENTUCKY

DRAWN BY J.M.	PARTIAL PLAZA LEVEL PLAN	DATE 15 MAY 67
TRACED BY	ARCHITECT EDWARD DURELL STONE 7 EAST 67TH STREET NEW YORK N.Y.	SCALE AS NOTED
CHECKED BY J.J.	ASSOCIATE ARCHITECTS & ENGINEERS LEE POTTER SMITH & ASSOCIATES 314 WILKINSON FRANKFORT, KENTUCKY	COMM. NO. 30066
SECTOR NO. D1	COMMONWEALTH OF KENTUCKY DEPARTMENT OF FINANCE – ENGINEERING STAFF FRANKFORT, KENTUCKY	DRAWING NO. S 39 of 71

APPROVED BY ARCHITECT DATE

APPROVED BY AGENCY HEAD DATE MAY 24 '68

APPROVED BY OWNER

STATE OF KENTUCKY ★ RICHARD Q. PRAEGER No. 6175 ★ REGISTERED PROFESSIONAL ENGINEER

PRAEGER-KAVANAGH-WATERBURY
STRUCTURAL-ENGINEERS

R. Q. PRAEGER, Partner

AS-BUILT DRAWINGS
DATE: 3/1/71
HUNT PAINTER & SULLIVAN, INC.

CPA-115

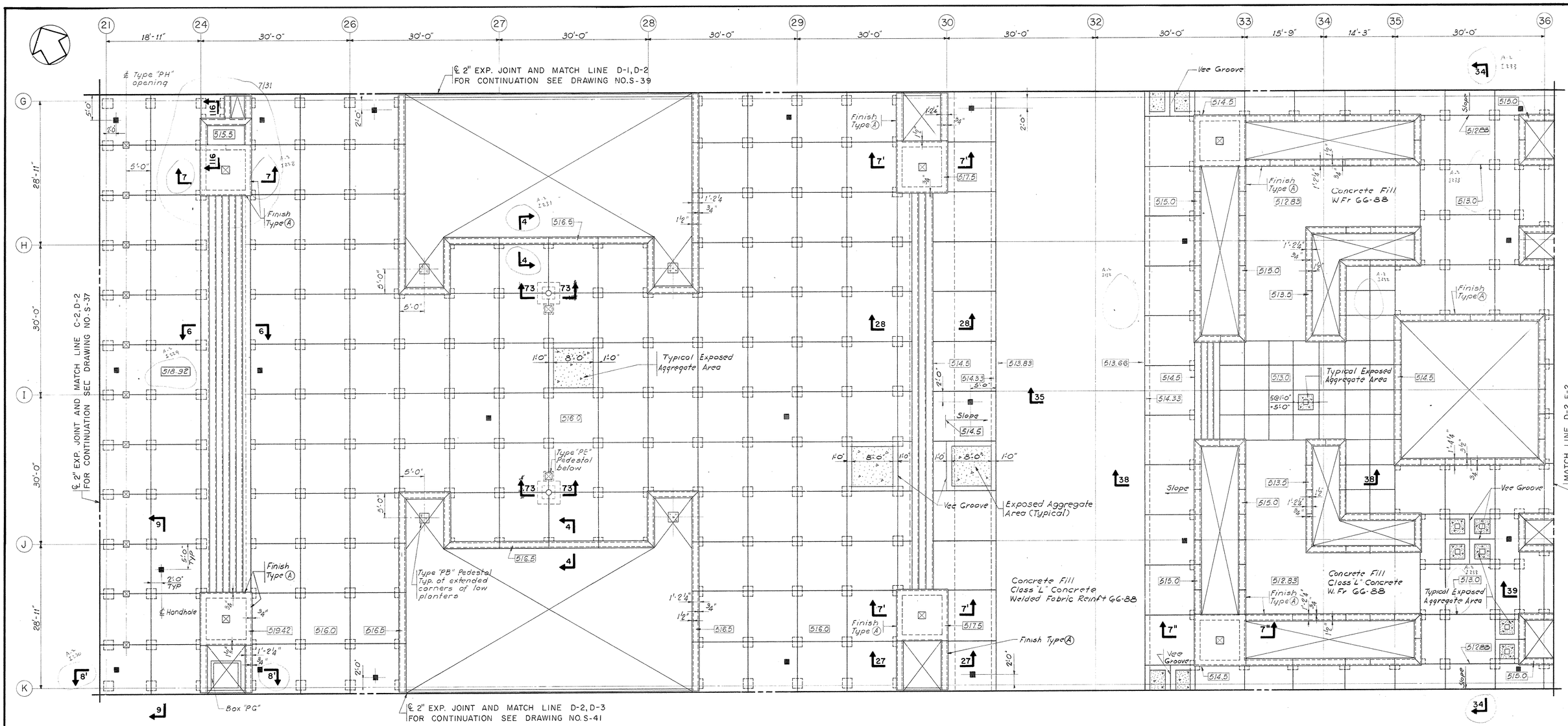

PARTIAL PLAZA LEVEL PLAN SECTOR D-2
Scale: 1/8" = 1'-0"

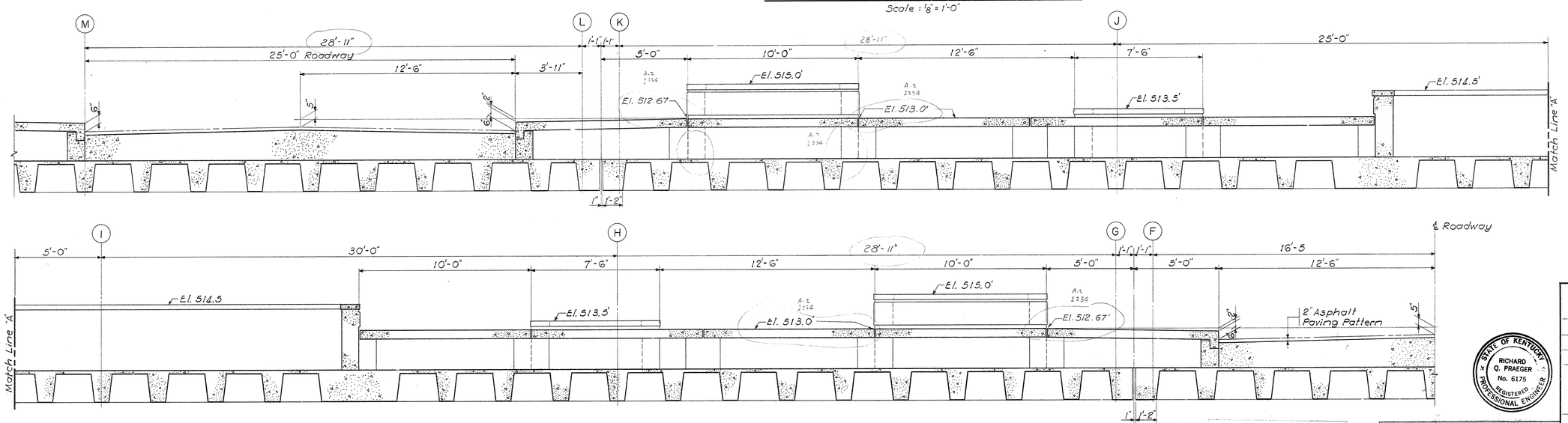

SECTION 34-34
Scale: 3/8" = 1'-0"

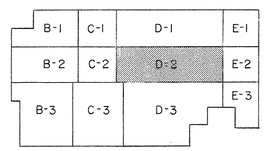

KEY PLAN
No Scale

July 31st '68
TRACINGS CONFORMED TO ADDENDA 11-1-67

CAPITAL PLAZA OFFICE BUILDING
FRANKFORT, KENTUCKY

DRAWN BY J.M.	PARTIAL PLAZA LEVEL PLAN	DATE 15 MAY 67
TRACED BY	ARCHITECT EDWARD DURELL STONE 7 EAST 67TH STREET NEW YORK N.Y.	SCALE AS NOTED
CHECKED BY J.Z.		COMM. NO. 50066
SECTOR NO. D2	ASSOCIATE ARCHITECTS & ENGINEERS LEE POTTER SMITH & ASSOCIATES 314 WILKINSON FRANKFORT, KENTUCKY	DRAWING NO. S 40
	COMMONWEALTH OF KENTUCKY DEPARTMENT OF FINANCE – ENGINEERING STAFF FRANKFORT, KENTUCKY	OF 71

STATE OF KENTUCKY RICHARD Q. PRAEGER No. 6175 REGISTERED PROFESSIONAL ENGINEER

PRAEGER-KAVANAGH-WATERBURY
STRUCTURAL-ENGINEERS
R.Q. PRAEGER, Partner

HUGO, CARTER & BLAKEMAN, INC.

APPROVED BY ARCHITECT DATE
APPROVED BY AGENCY HEAD DATE
APPROVED BY W. J. McConnell OWNER DATE MAY 24 1967

CPA-116

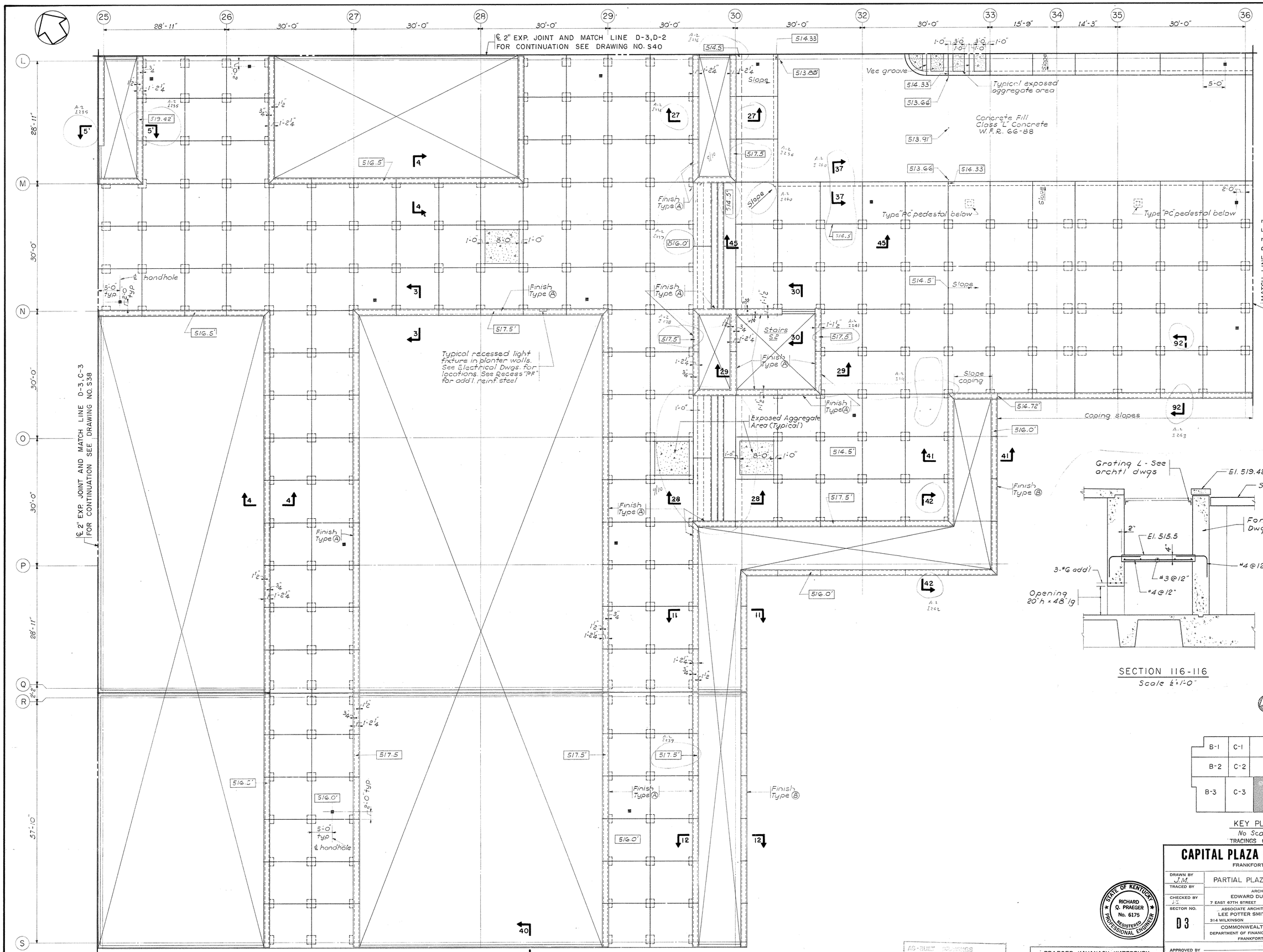

CAPITAL PLAZA OFFICE BUILDING

FRANKFORT, KENTUCKY

DRAWN BY J.M.	PARTIAL PLAZA LEVEL PLAN	DATE 15 MAY 67
TRACED BY	ARCHITECT EDWARD DURELL STONE 7 EAST 67TH STREET NEW YORK N. Y.	SCALE AS NOTED
CHECKED BY J.C.		COMM. NO. 50066
SECTOR NO. D3	ASSOCIATE ARCHITECTS & ENGINEERS LEE POTTER SMITH & ASSOCIATES 314 WILKINSON FRANKFORT, KENTUCKY	DRAWING NO. S 41
	COMMONWEALTH OF KENTUCKY DEPARTMENT OF FINANCE – ENGINEERING STAFF FRANKFORT, KENTUCKY	OF 71

STATE OF KENTUCKY ★ RICHARD Q. PRAEGER No. 6175 REGISTERED PROFESSIONAL ENGINEER ★

AS-BUILT DRAWINGS
DATE: JAN 7 8
HOGE, CARTER & BLAKEMAN, INC.

PRAEGER-KAVANAGH-WATERBURY
STRUCTURAL-ENGINEERS
R. Q. PRAEGER, Partner

APPROVED BY _____ ARCHITECT DATE _____
APPROVED BY _____ AGENCY HEAD DATE _____
APPROVED BY W. F. McCormick OWNER DATE MAY 24 1967

CPA-117

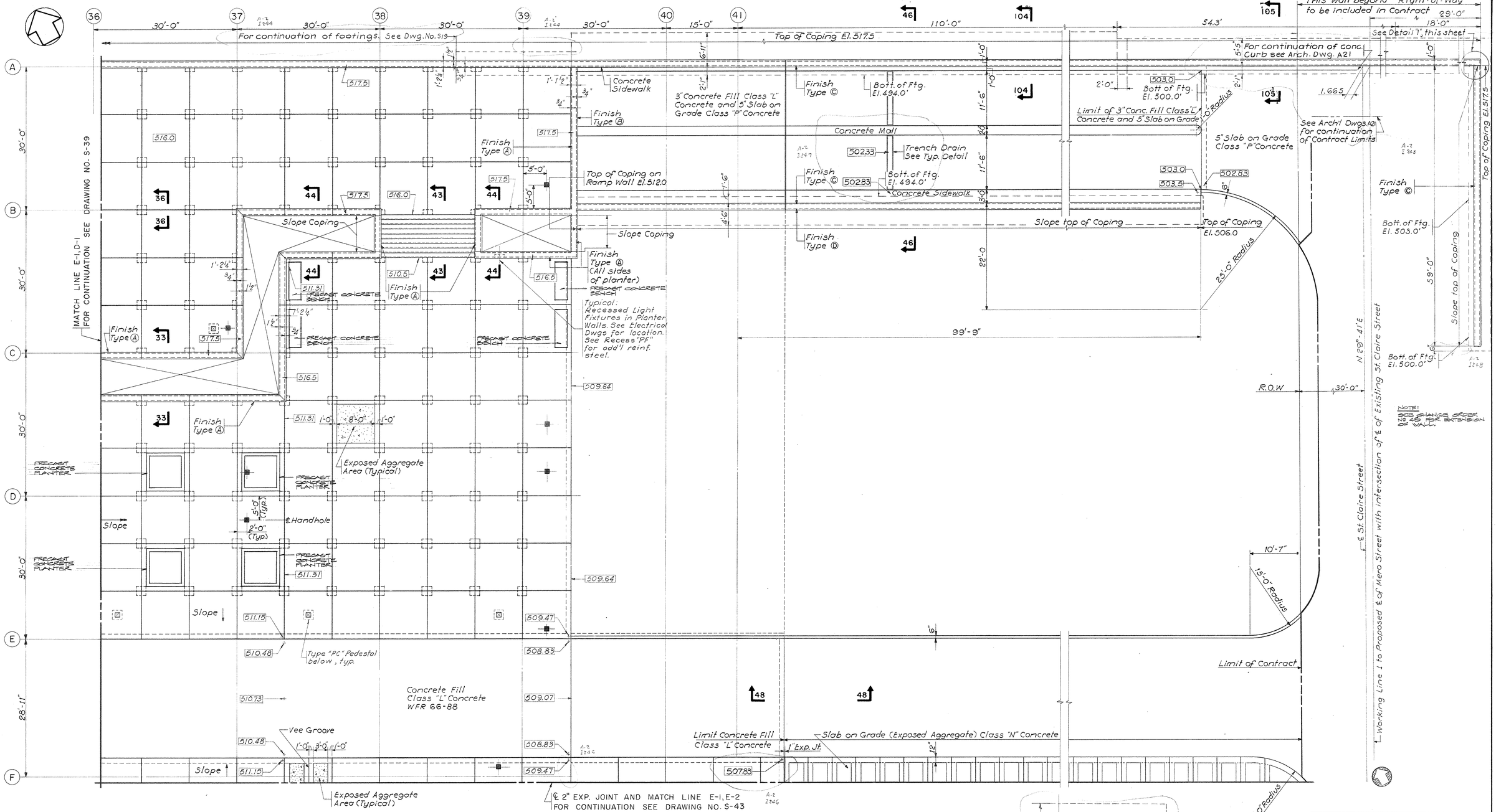

PARTIAL PLAZA LEVEL PLAN SECTOR E-1
Scale: 1/8" = 1'-0"

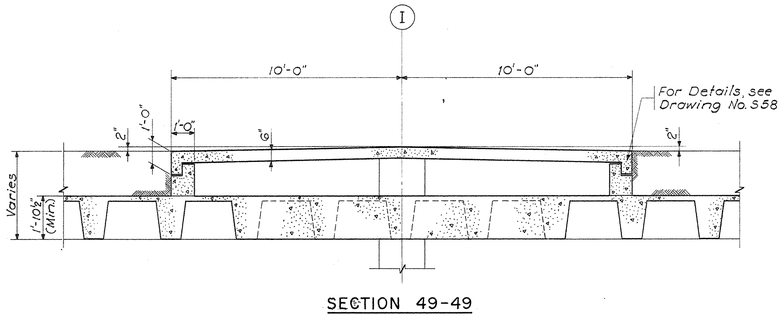

SECTION 49-49
Scale: 3/8" = 1'-0"

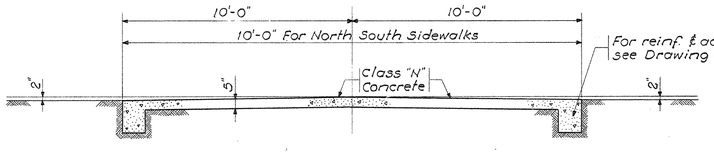

SECTION 50-50
Scale: 3/8" = 1'-0"

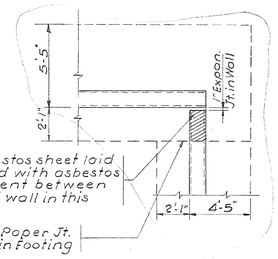

DETAIL "1"
Scale 1/4" 1'-0"

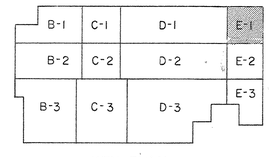

KEY PLAN
No Scale

TRACINGS CONFORMED TO ADDENDA 1 2 3

NOTE: SUPPLEMENTAL INFORMATION THIS SHEET SEE CHANGE ORDER DWG. No. 45 ITEM 1 DATED 18 SEPT. 71 INCLUDED AS PART OF AS-BUILT DWGS. AS OF JAN. 72.

RICHARD Q. PRAEGER No. 6175 REGISTERED PROFESSIONAL ENGINEER STATE OF KENTUCKY

AS-BUILT DRAWINGS DATE: JAN 72
HUGH, CARTER & BLAKEMAN, INC.

CAPITAL PLAZA OFFICE BUILDING
FRANKFORT, KENTUCKY

DRAWN BY J.M.	PARTIAL PLAZA LEVEL PLAN	DATE 15 MAY 67
TRACED BY JJ	ARCHITECT EDWARD DURELL STONE, 7 EAST 67TH STREET, NEW YORK N.Y.	SCALE AS NOTED
CHECKED BY JJ		COMM. NO. 30066
SECTOR NO. E1	ASSOCIATE ARCHITECTS & ENGINEERS LEE POTTER SMITH & ASSOCIATES, 314 WILKINSON, FRANKFORT, KENTUCKY	DRAWING NO. S 42
	COMMONWEALTH OF KENTUCKY DEPARTMENT OF FINANCE – ENGINEERING STAFF FRANKFORT, KENTUCKY	OF 71

PRAEGER-KAVANAGH-WATERBURY
STRUCTURAL-ENGINEERS
R.Q. PRAEGER, Partner

APPROVED BY ARCHITECT DATE
APPROVED BY AGENCY HEAD DATE
APPROVED BY OWNER DATE MAY 24 1967

CPA-118

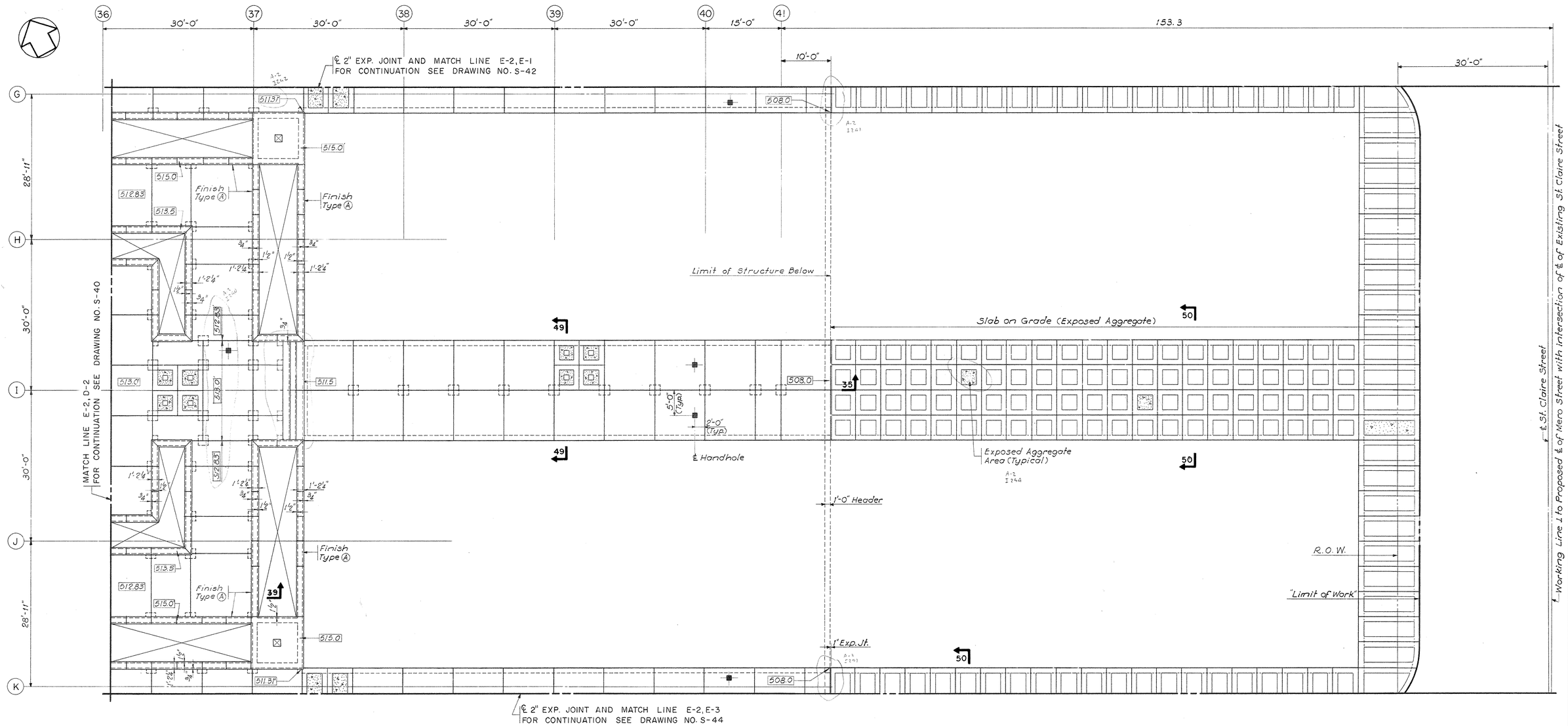

PARTIAL PLAZA LEVEL PLAN SECTOR E-2
Scale : 1/8" = 1'-0"

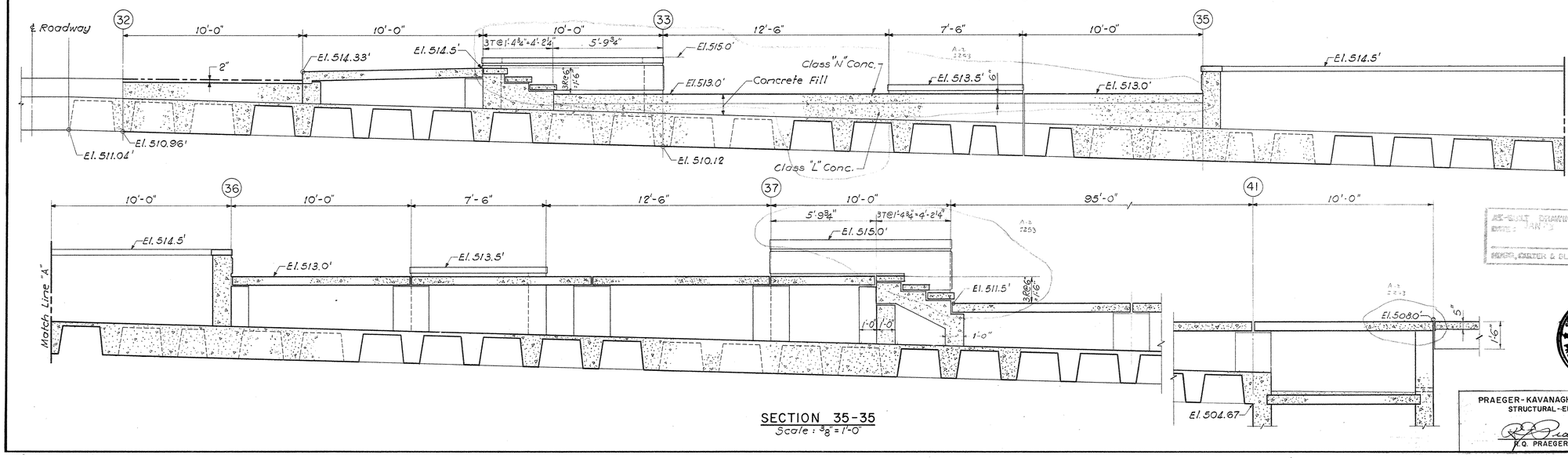

SECTION 35-35
Scale : 3/8" = 1'-0"

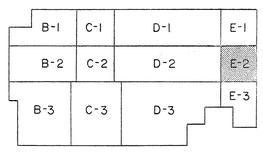

KEY PLAN
No Scale
TRACINGS CONFORMED TO ADDENDA 11-1-67

AS-BUILT DRAWINGS
DATE: JAN 73
HOGG, CARTER & BLAKEMAN, INC.

STATE OF KENTUCKY
RICHARD Q. PRAEGER
No. 6175
REGISTERED PROFESSIONAL ENGINEER

PRAEGER-KAVANAGH-WATERBURY
STRUCTURAL-ENGINEERS
R.Q. PRAEGER, Partner

CAPITAL PLAZA OFFICE BUILDING
FRANKFORT, KENTUCKY

DRAWN BY J.M.	PARTIAL PLAZA LEVEL PLAN	DATE 15 MAY 67
TRACED BY	ARCHITECT EDWARD DURELL STONE 7 EAST 67TH STREET NEW YORK N.Y.	SCALE AS NOTED
CHECKED BY J.T.		COMM. NO. 50066
SECTOR NO. E 2	ASSOCIATE ARCHITECTS & ENGINEERS LEE POTTER SMITH & ASSOCIATES 314 WILKINSON FRANKFORT, KENTUCKY	DRAWING NO. S 43 OF 71
	COMMONWEALTH OF KENTUCKY DEPARTMENT OF FINANCE – ENGINEERING STAFF FRANKFORT, KENTUCKY	

APPROVED BY ARCHITECT DATE
APPROVED BY ENGINEER DATE
APPROVED BY W.J. McConnell OWNER DATE MAY 24 1967

CPA-119

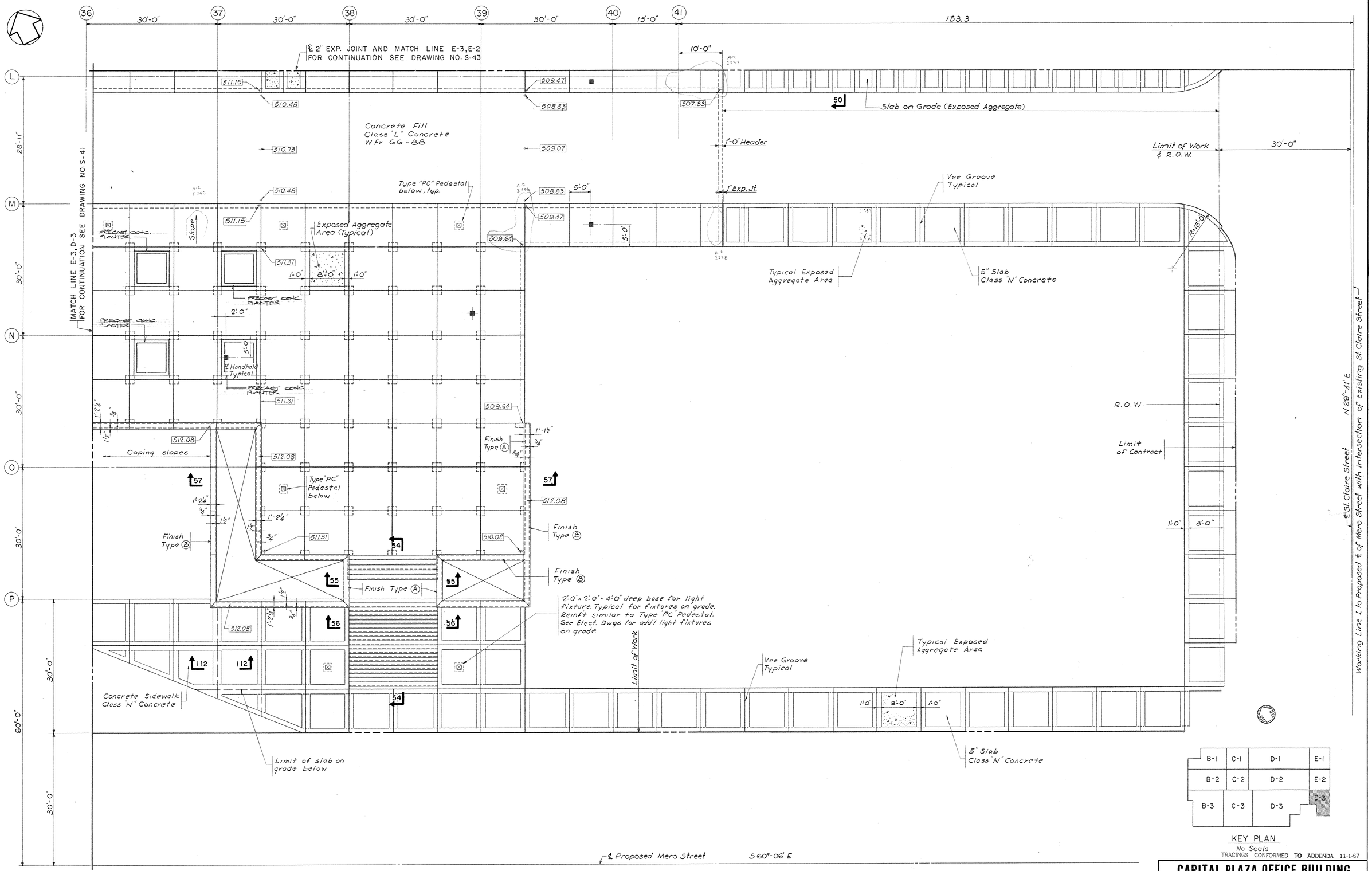

PARTIAL PLAZA LEVEL PLAN SECTOR E-3

Scale: 1/8" = 1'-0"

B-1	C-1	D-1	E-1
B-2	C-2	D-2	E-2
B-3	C-3	D-3	E-3

KEY PLAN

No Scale

TRACINGS CONFORMED TO ADDENDA 11-1-67

CAPITAL PLAZA OFFICE BUILDING

FRANKFORT, KENTUCKY

DRAWN BY J.M.	PARTIAL PLAZA LEVEL PLAN	DATE 15 MAY 67
TRACED BY	ARCHITECT EDWARD DURELL STONE, 7 EAST 67TH STREET, NEW YORK N.Y.	SCALE AS NOTED
CHECKED BY J.T.	ASSOCIATE ARCHITECTS & ENGINEERS LEE POTTER SMITH & ASSOCIATES, 314 WILKINSON, FRANKFORT, KENTUCKY	COMM. NO. 50066
SECTOR NO. E 3	COMMONWEALTH OF KENTUCKY, DEPARTMENT OF FINANCE – ENGINEERING STAFF, FRANKFORT, KENTUCKY	DRAWING NO. S 44 of 71

APPROVED BY ARCHITECT DATE

APPROVED BY DATE

APPROVED BY OWNER DATE MAY 24 1967

STATE OF KENTUCKY — RICHARD Q. PRAEGER No. 6175 — REGISTERED PROFESSIONAL ENGINEER

PRAEGER-KAVANAGH-WATERBURY
STRUCTURAL-ENGINEERS

R.Q. PRAEGER, Partner

CPA-120

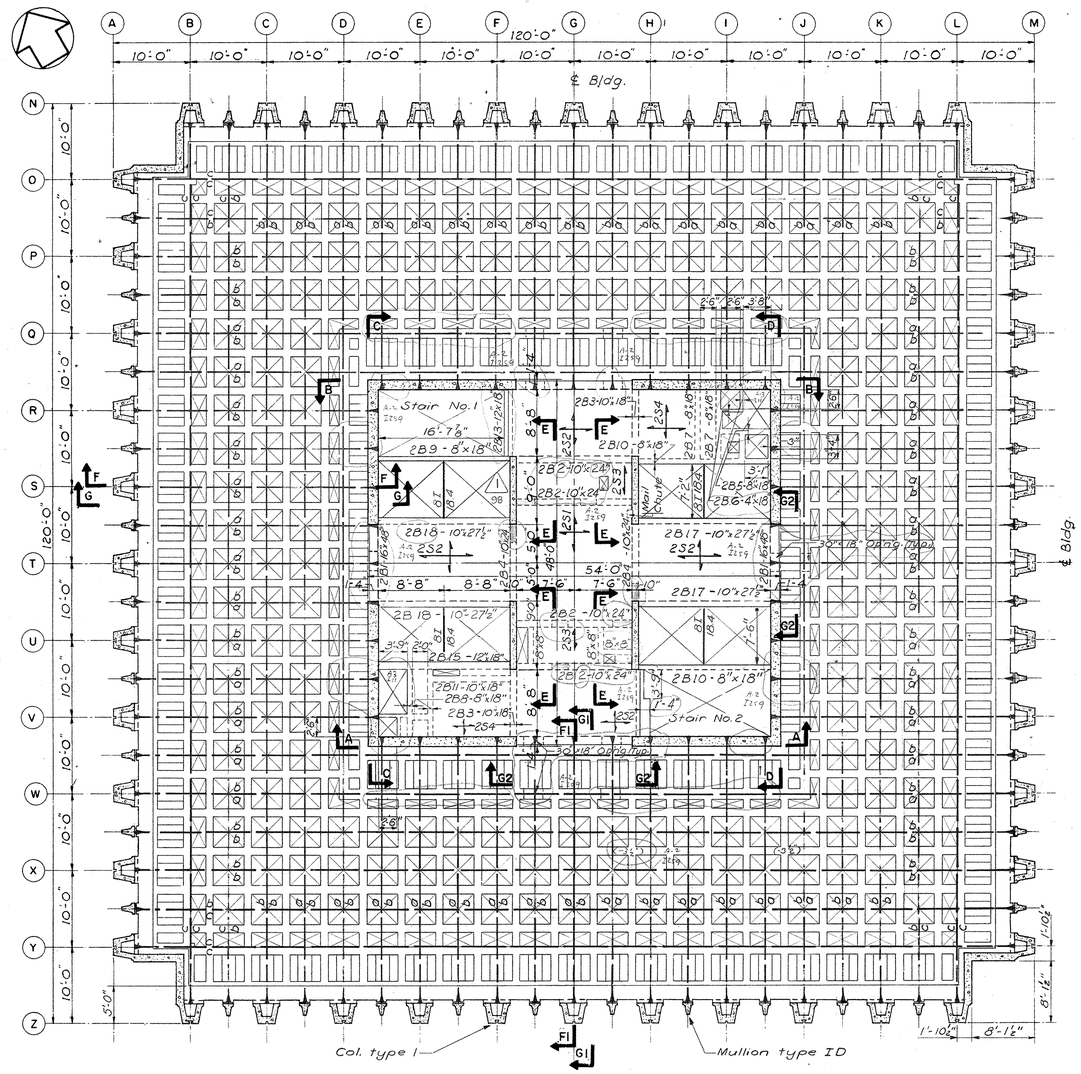

1ST FLOOR FRAMING PLAN

CONC. FLOORS ON PERMANENT STEEL CENTERING NOT SHOWN
PRECAST UNITS NOT SHOWN
DATUM - TOP OF FINISHED FLOOR ELEV. 541.0'
Scale: 1/8"=1'-0"

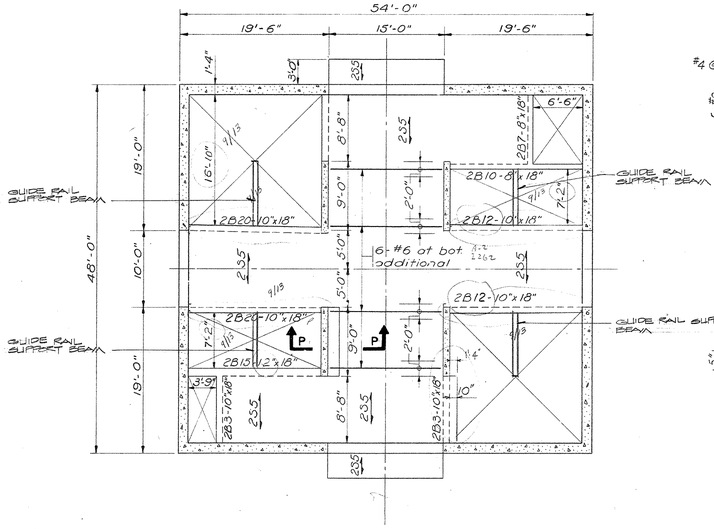

INTERMEDIATE FLOOR FRAMING PLAN

DATUM - TOP OF FINISHED FLOOR ELEV. 533'-8¾"
Scale: 1/8"=1'-0"

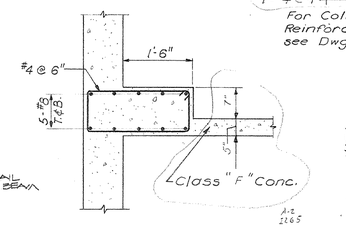

SECTION P - P

Scale: 3/4"=1'-0"

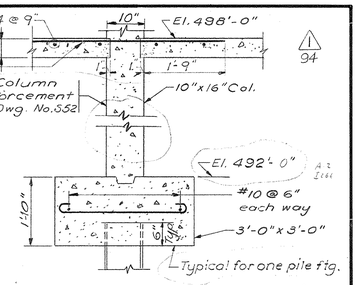

SECTION R15 - R15

Scale: 3/4"=1'-0"

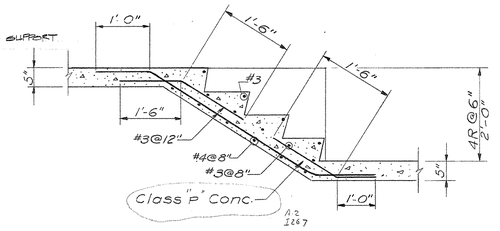

SECTION R13 - R13

Scale: 3/4"=1'-0"

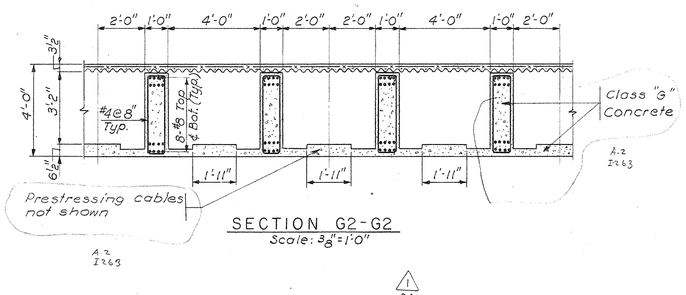

SECTION G2 - G2

Scale: 3/8"=1'-0"

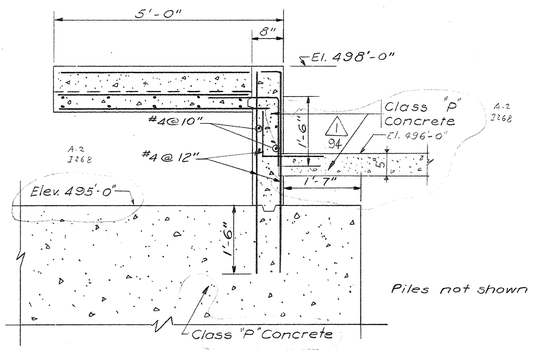

SECTION R14 - R14

Scale: 3/4"=1'-0"

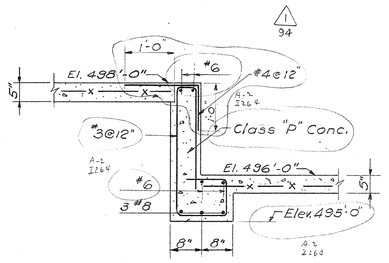

SECTION R12 - R12

Scale 3/4"=1'-0"

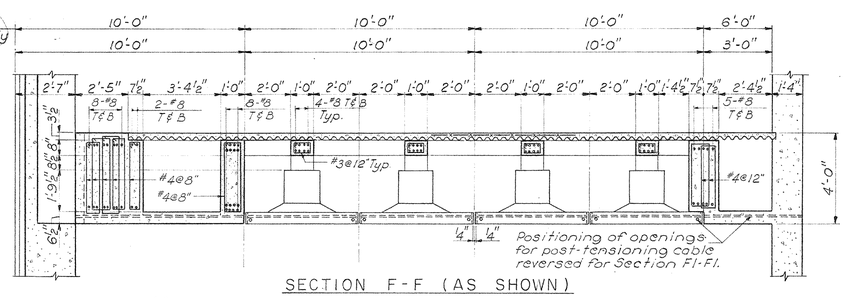

SECTION F-F (AS SHOWN)
SECTION F1-F1 (AS NOTED)

Scale: 3/8"=1'-0"

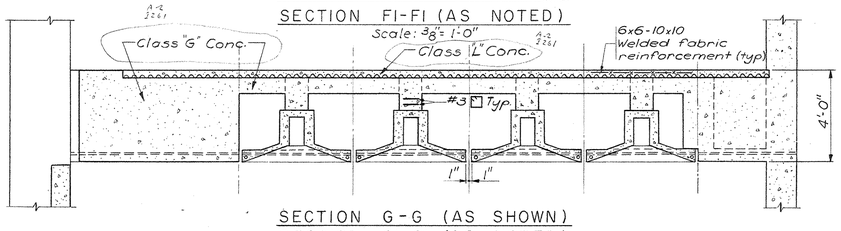

SECTION G-G (AS SHOWN)
SECTION G1 G1 (AS NOTED)

Scale: 3/8"=1'-0"

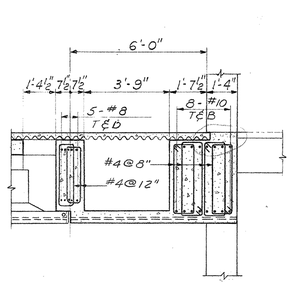

FOR SECTION F1 ONLY

Scale: 3/8"=1'-0"

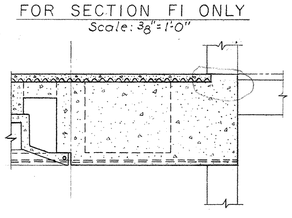

FOR SECTION G1 ONLY

Scale: 3/8"=1'-0"

NOTES

1. For General Notes and Typical Details, Dwg. No. S 57.
2. For Column Schedule and Corner Wall Details, see Dwg. No. S 52.
3. For Stairs No.1 & No.2, see Dwg. No. S 55.
4. For Sections A-A, B-B, C-C, D-D, and E-E, see Dwg No. S 56.
5. The top of the structural slab is (-3") unless otherwise noted.
6. All concrete slabs are 4" thick unless otherwise noted.
7. For Precast Concrete, see Dwg. No. S4.
8. For Core Beams & Slab Schedules, see Dwg. No. S46.
9. For Prestressing Cable Schedules, see Dwg. No. S46.
10. For additional reinforcement at beam openings, see Dwg. No. S49.
11. For location of sections R12-R12, R13-R13, R14-R14 and R15-R15 see Dwg. No. S5.
12. All 6½" deep beams encasing the cables have 3 #5 Top & Bot. with #3 ties @12".

LOAD SCHEDULE			
CORE		OFFICE	
Dead Load *		Dead Load	
3" Terrazzo	40 p.s.f.	3½" Conc. floor on steel centering	40 p.s.f.
4" Slab	39 p.s.f.		
Hung ceiling	10 p.s.f.	Average framing	90 p.s.f.
Mechanical	5 p.s.f.		130 p.s.f.
	94 p.s.f.		
Live Load	100 p.s.f.	Live Load	100 p.s.f.

*Beam & partitions included separately.

KEY PLAN
No Scale

B-1	C-1	D-1	E-1
B-2	C-2	D-2	E-2
B-2	C-3	D-3	E-3

Change Proposal No.1
Circled area noted thus △1 Item No.

STATE OF KENTUCKY
RICHARD Q. PRAEGER
No. 6175
REGISTERED PROFESSIONAL ENGINEER

PRAEGER-KAVANAGH-WATERBURY
STRUCTURAL-ENGINEERS
R.Q. PRAEGER, Partner

AS-BUILT TRANSMITTED
DATE: MAY 24 1967
KLEIN, CANTER & BLAKEMAN, INC.

Sept. 13, 1965
TRACINGS CONFORMED TO ADDENDA 11-1-67

CAPITAL PLAZA OFFICE BUILDING

FRANKFORT, KENTUCKY

DRAWN BY	1st FLOOR FRAMING PLAN		DATE 15 MAY 67
TRACED BY	ARCHITECT EDWARD DURELL STONE		SCALE AS NOTED
CHECKED BY J.Z.	7 EAST 67TH STREET NEW YORK N.Y.		COMM. NO. 50066
SECTOR NO. C 2	ASSOCIATE ARCHITECTS & ENGINEERS LEE POTTER SMITH & ASSOCIATES 314 WILKINSON FRANKFORT, KENTUCKY		DRAWING NO. S 45
	COMMONWEALTH OF KENTUCKY DEPARTMENT OF FINANCE - ENGINEERING STAFF FRANKFORT, KENTUCKY		of 71

APPROVED BY ARCHITECT DATE
APPROVED BY AGENCY HEAD DATE
APPROVED BY OWNER DATE MAY 24 1967

CPA-121

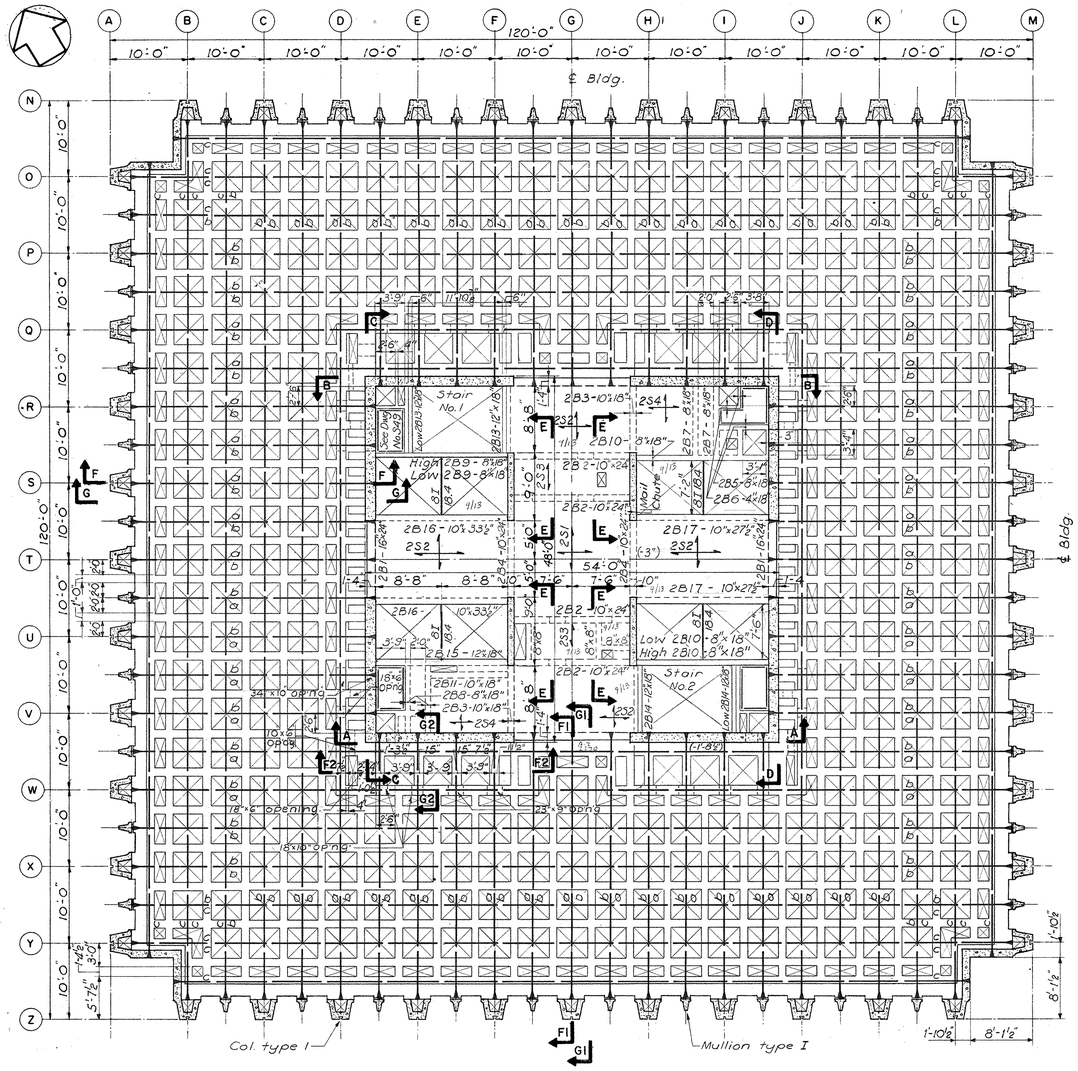

2nd. - 12th. FLOOR FRAMING PLAN

CONC. FLOORS ON PERMANENT STEEL CENTERING NOT SHOWN
PRECAST UNITS NOT SHOWN
DATUM - TOP OF FINISHED FLOOR
Scale: 1/8"=1'-0"

SLAB SCHEDULE							
MARK	SIZE	TOP STEEL		BOTTOM STEEL		REMARKS
		LW	SW	LW	SW	
2S1	4"	#4@8"	#4@8"	#4@8"	#4@8"	
2S2	4"	#4@12"	#4@12"	#4@12"	#4@8"	
2S3	4"	#3@12"	#3@12"	#3@12"	#3@8"	
2S4	4"	#3@12"	#3@8"	#3@12"	#3@8"	
2S5	4"	#3@12"	#3@8"	#3@12"	#4@8"	

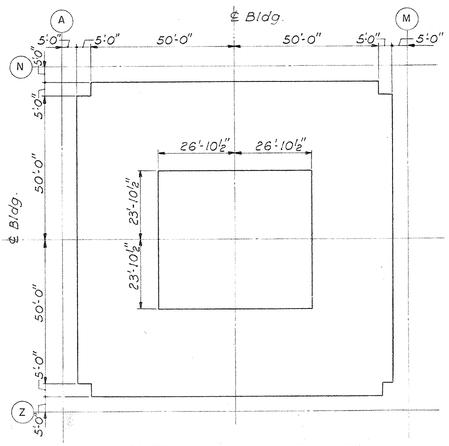

LIMITS OF CONC. FLOORS
ON PERMANENT STEEL CENTERING
Scale: 3/64"=1'-0"

FINISHED FLOOR ELEVATIONS	
2nd. Floor	552'-0"
3rd. Floor	563'-0"
4th. Floor	574'-0"
5th. Floor	585'-0"
6th. Floor	596'-0"
7th. Floor	607'-0"
8th. Floor	618'-0"
9th. Floor	629'-0"
10th. Floor	640'-0"
11th. Floor	651'-0"
12th. Floor	662'-0"

2nd. - 12th. FLOOR BEAM SCHEDULE									
BEAM MARK	SIZE	STEEL	LOCATION	FACE WEST OR SOUTH SUPPORT		FACE EAST OR NORTH SUPPORT	STIRRUPS OR TIES SIZE & SPACING	TYPE	REMARKS
2B1	16"x Varies	4-#10 4-#10	Top Bot.	3'-0" 1'-0"	10'-0"	3'-0" 1'-0"	#4@8"		
2B2A 2B2 2B2B	30"x20" 10"x24" 30"x20"	3-#8 3-#9	Top Bot.	1'-3" 8" 8"	15'-0"	8" 1'-3"	#2@4" #4@8" #2@4"		
2B3	10"x Varies	2-#6 2-#8	Top Bot.	1'-3" 1'-2" 6"	8'-8"	1'-2" 6" 1'-3"	#3@8"		
2B4A 2B4 2B4B	12"x20" 10"x24" 12"x20"	2-#6 2-#8	Top Bot.	2'-3" 8"	9'-4"	2'-3" 8"	#2@4" #3@8" #2@4"		
2B5	8"x18"	2-#6 2-#8	Top Bot.	1'-3" 6"	9 1/13 6'-6"	1'-2" 1'-0" 1'-3"	#3@8"		
2B6	4"x18"	See Dwg. No. S-57 for all 4"x18" beam reinforcement.							
2B7	8"x18"	2-#6 2-#8	Top Bot.	1'-0" 6"	9'-0"	1'-2" 1'-0" 1'-3"	#3@8"		
2B8	8"x18"	2-#6 2-#8	Top Bot.	1'-2" 6"		6" 1'-0"			
2B9	8"x18"	2-#8 4-#10	Top Bot.	1'-3" 1'-2" 6" 6"	17'-4" 1" Clear	6" 1'-3"	#4@8"		Two layers bot. steel
2B10	8"x18"	2-#8 4-#10	Top Bot.	1'-3" 6" 6"	17'-4" 1" Clear	1'-2" 6" 1'-3"	#4@8"		Two layers bot. steel
2B11	8"x18"	2-#6 2-#8	Top Bot.	1'-3" 6"	10'-3"	6" 1'-3"	#3@8"		
2B13	12"x18"	2-#7 1-#7 3-#9	Top Top Bot.	1'-3" 6" 6"	8'-8"	1'-2" 1'-2" 6" 1'-3"	#3@8"		
2B14	12"x18"	2-#7 1-#7 3-#9	Top Top Bot.	1'-3" 1'-2" 1'-2" 6"	8'-8"	6" 1'-3" 6"	#3@8"		
2B15	12"x18"	3-#8 3-#11	Top Bot.	1'-2" 1'-0"	17'-4"	6" 1'-3" 6"	#3@8"		
2B16 2B18	10"x33½" 10"x27½"	2-#11 2-#11	Top Bot.	1'-3" 1'-2" 1'-0"	17'-4"	2'-3" 6"	#3@8"		
2B17 2B12 2B20	10"x27½" 10"x18" 10"x18"	2-#8 2-#11	Top Bot.	2'-3" 6"	17'-4"	1'-2" 1'-0" 1'-3"	#3@8"		2B20 opposite hand
2B19	10"x18"	2-#8 2-#9	Top Bot.	1'-3" 8" 6"	15'-0"	8" 1'-3" 6"	#4@8"		

NOTES

1. For General Notes and Typical Details, Dwg. No. S57.
2. For Column Schedule and Corner Wall Details, see Dwg. No. S52.
3. For Stairs No.1 & No.2, see Dwg. No. S55.
4. For Sections A-A, B-B, C-C, D-D, & E-E, see Dwg. No. S56.
5. The top of the structural slab is (-3½") unless otherwise noted.
6. All concrete slabs are 4" thick unless otherwise noted.
7. For Precast Concrete, see Dwg. No. S53.
8. For additional reinforcing steel at Beam openings, see dwg. No. S49.
9. All 6'2" deep beams encasing the cables have 3 #5 Top and Bot. with #3 ties @12".

LOAD SCHEDULE			
CORE		OFFICE	
Dead Load*		Dead Load	
3" Terrazzo	40 p.s.f.	3½" Conc. floor on steel centering	40 p.s.f.
4" Slab	33 p.s.f.		
Hung ceiling	10 p.s.f.	Average framing	90 p.s.f.
Mechanical	5 p.s.f.		
	94 p.s.f.		130 p.s.f.
Live Load	100 p.s.f.	Live Load	100 p.s.f.
*Beam & partitions included separately.			

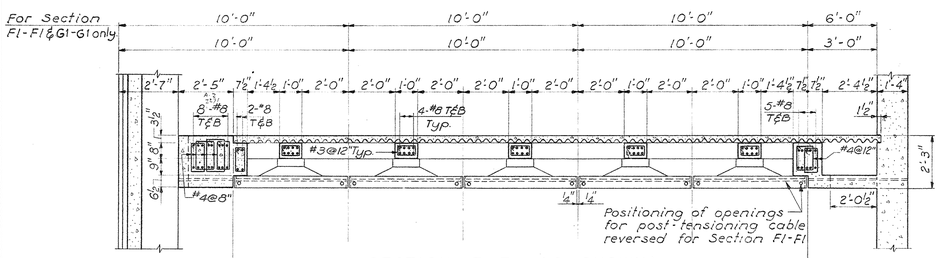

SECTION F-F (AS SHOWN)
SECTION F1-F1 (AS NOTED)
Scale: 3/8"=1'-0"

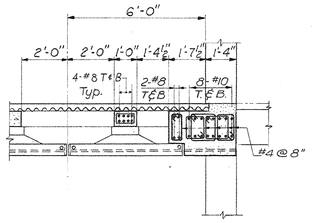

FOR SECTION F1 ONLY
Scale: 3/8"=1'-0"

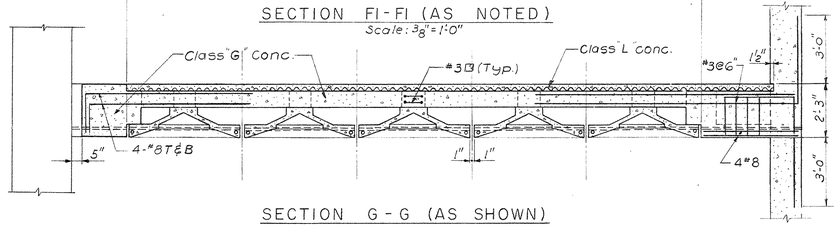

SECTION G-G (AS SHOWN)
SECTION G1-G1 (AS NOTED)
Scale: 3/8"=1'-0"

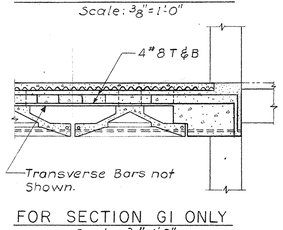

FOR SECTION G1 ONLY
Scale: 3/8"=1'-0"

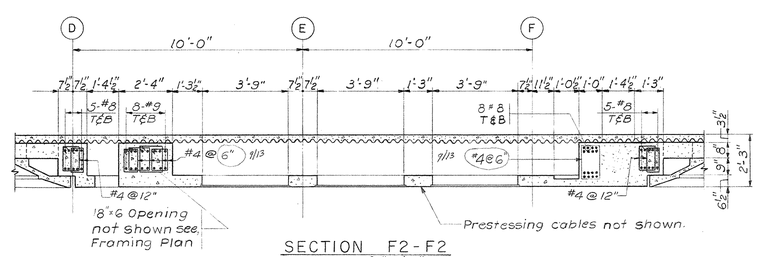

SECTION F2-F2
Scale: 3/8"=1'-0"

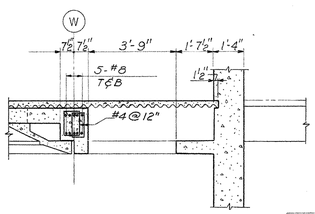

SECTION G2-G2
Scale: 3/8"=1'-0"

PRESTRESS CABLE SCHEDULE		
MARK	FORCE	SIZE
a	64^K	1.2"
b	32^K	0.6"
c	24^K	0.5"

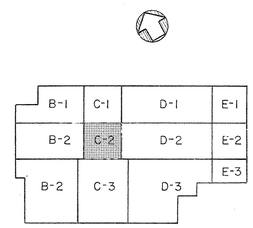

KEY PLAN
No Scale

Sept. 13, 1967
TRACINGS CONFORMED TO ADDENDA #1-1-67

STATE OF KENTUCKY
RICHARD Q. PRAEGER No. 6175 REGISTERED PROFESSIONAL ENGINEER

AS-FOR... DRAWINGS
DATED ... 1967
HUGO ... & BLAKEMAN, INC.

PRAEGER-KAVANAGH-WATERBURY
STRUCTURAL-ENGINEERS
R.Q. PRAEGER, Partner

CAPITAL PLAZA OFFICE BUILDING

FRANKFORT, KENTUCKY

DRAWN BY	2nd - 12th. FLOOR FRAMING PLAN		DATE 15 MAY 67
TRACED BY	ARCHITECT EDWARD DURELL STONE 7 EAST 67TH STREET NEW YORK N.Y.		SCALE AS NOTED
CHECKED BY J.I.			COMM. NO. 50066
SECTOR NO. C 2	ASSOCIATE ARCHITECTS & ENGINEERS LEE POTTER SMITH & ASSOCIATES 314 WILKINSON FRANKFORT, KENTUCKY		DRAWING NO. S 46
	COMMONWEALTH OF KENTUCKY DEPARTMENT OF FINANCE – ENGINEERING STAFF FRANKFORT, KENTUCKY		OF 71
APPROVED BY ARCHITECT		DATE	
APPROVED BY CONSULTING ENGINEER		DATE	
APPROVED BY OWNER		DATE	

CPA-122

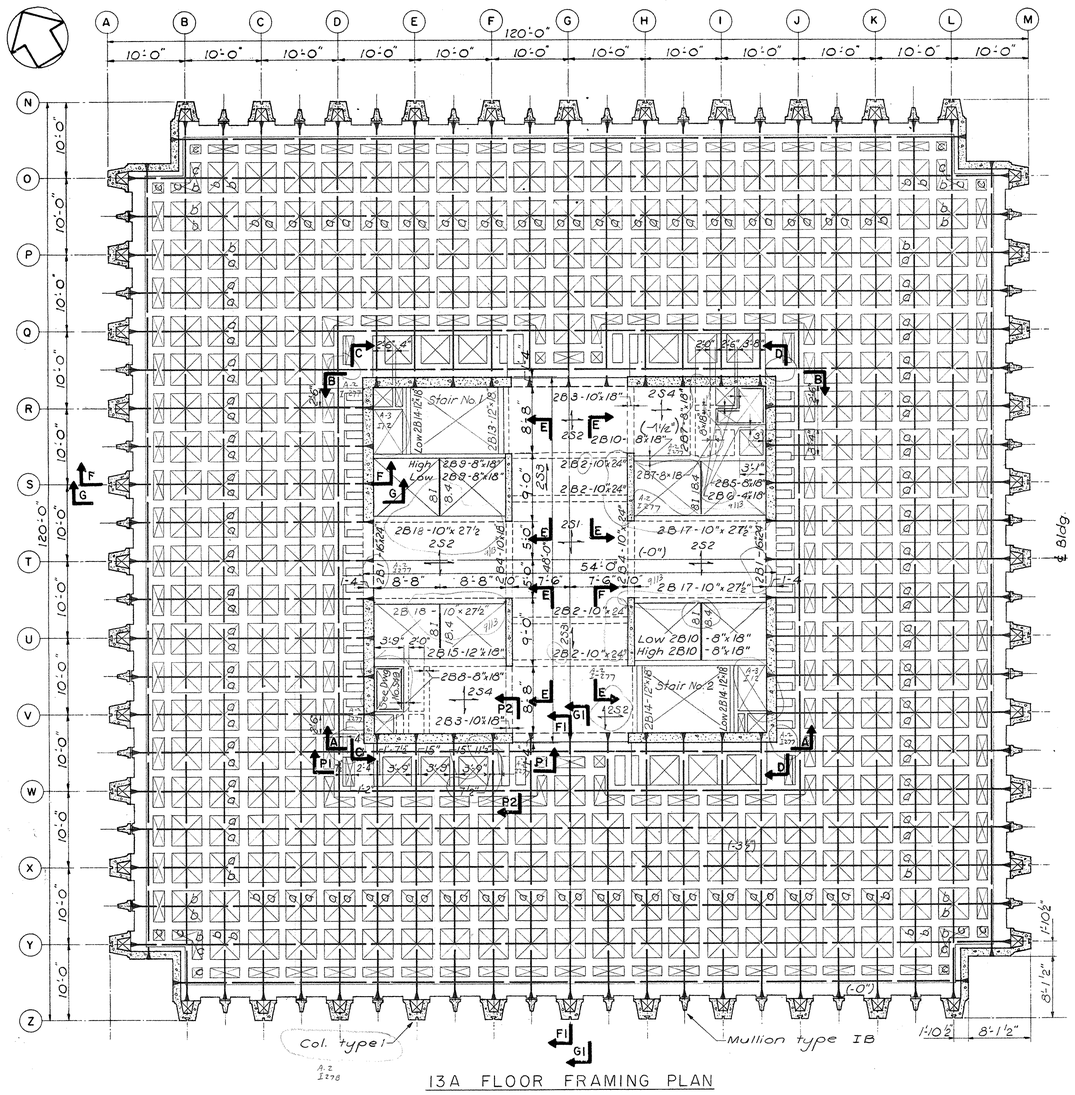

13A FLOOR FRAMING PLAN

CONC. FLOORS ON PERMANENT STEEL CENTERING NOT SHOWN
PRECAST UNITS NOT SHOWN
DATUM - TOP OF FINISHED FLOOR ELEV. 674'-0"
Scale: 1/8" = 1'-0"

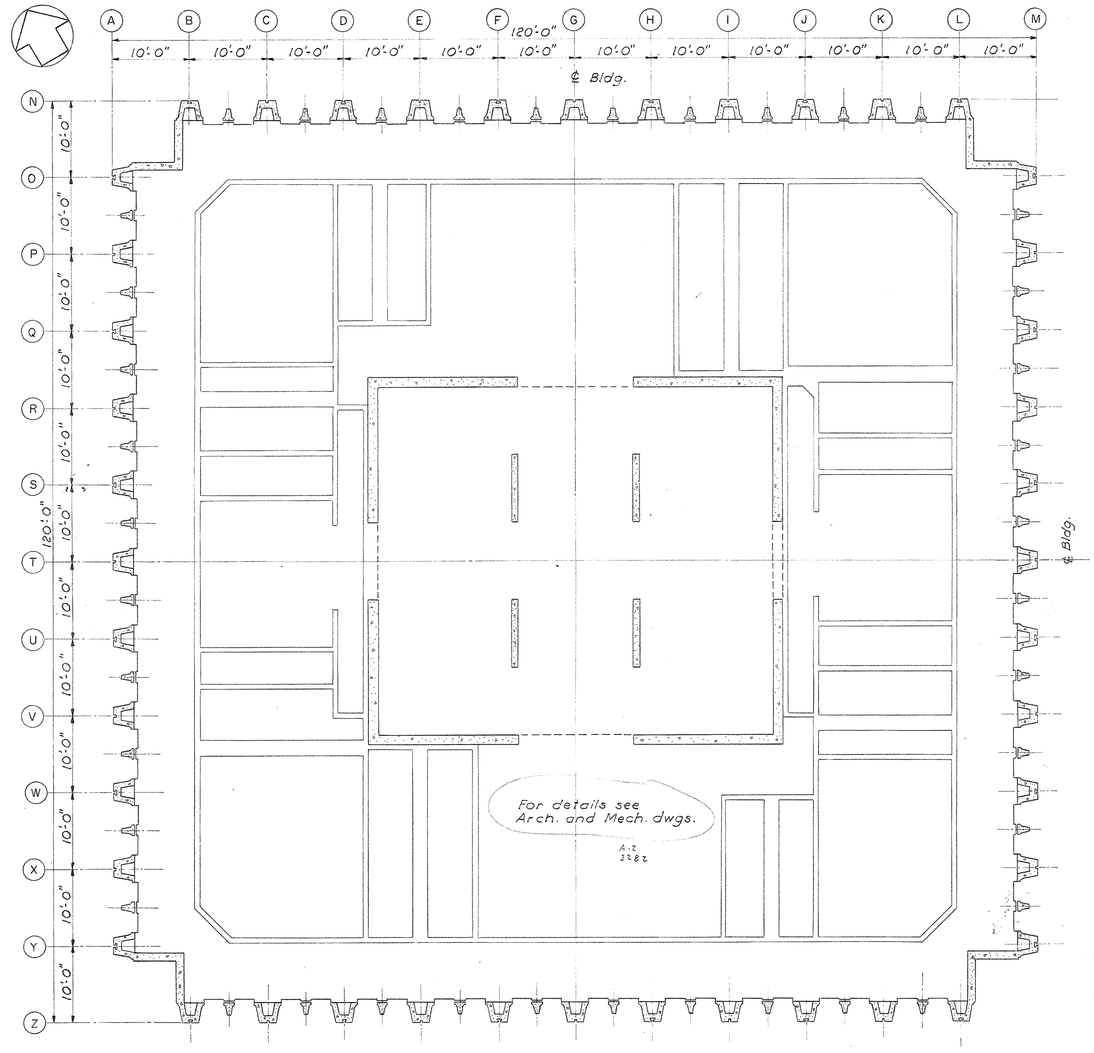

PLAN OF CONCRETE FILLS
Scale: 1/8" = 1'-0"

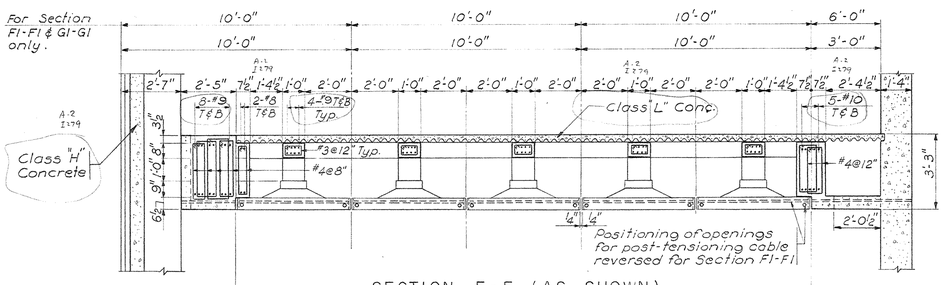

SECTION F-F (AS SHOWN)
SECTION F1-F1 (AS NOTED)
Scale: 3/8" = 1'-0"

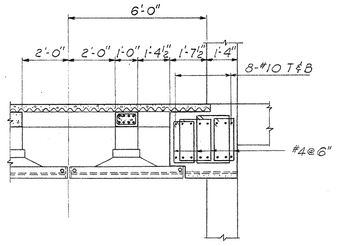

FOR SECTION F1 ONLY
Scale: 3/8" = 1'-0"

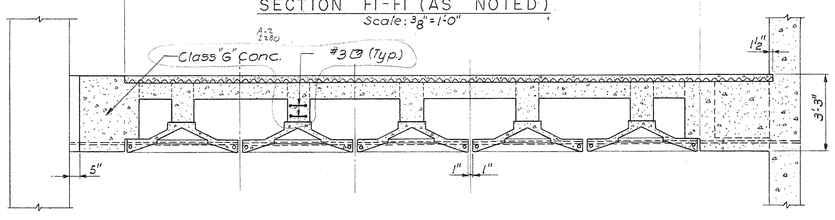

SECTION G-G (AS SHOWN)
SECTION G1-G1 (AS NOTED)
Scale: 3/8" = 1'-0"

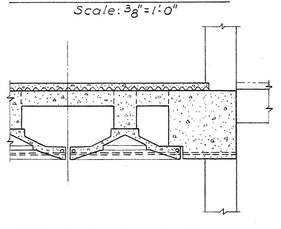

FOR SECTION G1 ONLY
Scale: 3/8" = 1'-0"

NOTES

1. For General Notes and Typical Details, Dwg. No. S57.
2. For Column Schedule and Corner Wall Details, see Dwg. No. S52.
3. For Stairs No.1 & No.2, see Dwg. No. S55.
4. For Sections A-A, B-B, C-C, D-D & E-E, see Dwg. No. S56
5. The top of the structural slab is (-3½") unless otherwise noted.
6. All concrete slabs are 4" thick unless otherwise noted.
7. For Precast Concrete, see Dwg. No. S53.
8. For limits of concrete floors on permanent steel centering, see Dwg. No. S46.
9. For Prestressing Cable Schedule, see Dwg. No. S46.
10. For Core Beams and Slab Schedule, see Dwg. No. S46.
11. All 6½" deep beams encosing the cables have 3#5 T&B with #3 Ties @ 12".
12. For Sections P1-P1 & P2-P2 see Dwg. No. S49.
13. For all slab & beam openings see Dwg. No. S46.

LOAD SCHEDULE			
CORE		OFFICE	
Dead Load *		Dead Load	
4" Slab	39 p.s.f.	Conc. fill, curbs & pads	100 p.s.f.
Hung ceiling	10 p.s.f.		
Mechanical	5 p.s.f.	3½" Conc. floor on steel centering	40 p.s.f.
	54 p.s.f.		
		Average framing	90 p.s.f.
			230 p.s.f.
Live Load	100 p.s.f.	Live Load	200 p.s.f.

* Beams & partitions included separately.

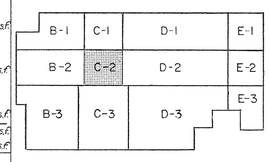

KEY PLAN
No Scale

Sept. 13, 1967
TRACINGS CONFORMED TO ADDENDA 11-1-67

PRAEGER-KAVANAGH-WATERBURY
STRUCTURAL-ENGINEERS
R.Q. PRAEGER, Partner

STATE OF KENTUCKY
RICHARD Q. PRAEGER
No. 6175
REGISTERED PROFESSIONAL ENGINEER

CAPITAL PLAZA OFFICE BUILDING

FRANKFORT, KENTUCKY

DRAWN BY	13A FLOOR FRAMING PLAN	DATE 15 MAY 67
TRACED BY	ARCHITECT EDWARD DURELL STONE 7 EAST 67TH STREET NEW YORK N.Y.	SCALE AS NOTED
CHECKED BY J.J.		COMM. NO. 30066
SECTOR NO. C2	ASSOCIATE ARCHITECTS & ENGINEERS LEE POTTER SMITH & ASSOCIATES 314 WILKINSON FRANKFORT, KENTUCKY	DRAWING NO. S 47
	COMMONWEALTH OF KENTUCKY DEPARTMENT OF FINANCE – ENGINEERING STAFF FRANKFORT, KENTUCKY	OF 71

APPROVED BY ARCHITECT DATE
APPROVED BY DATE
APPROVED BY OWNER DATE

CPA-123

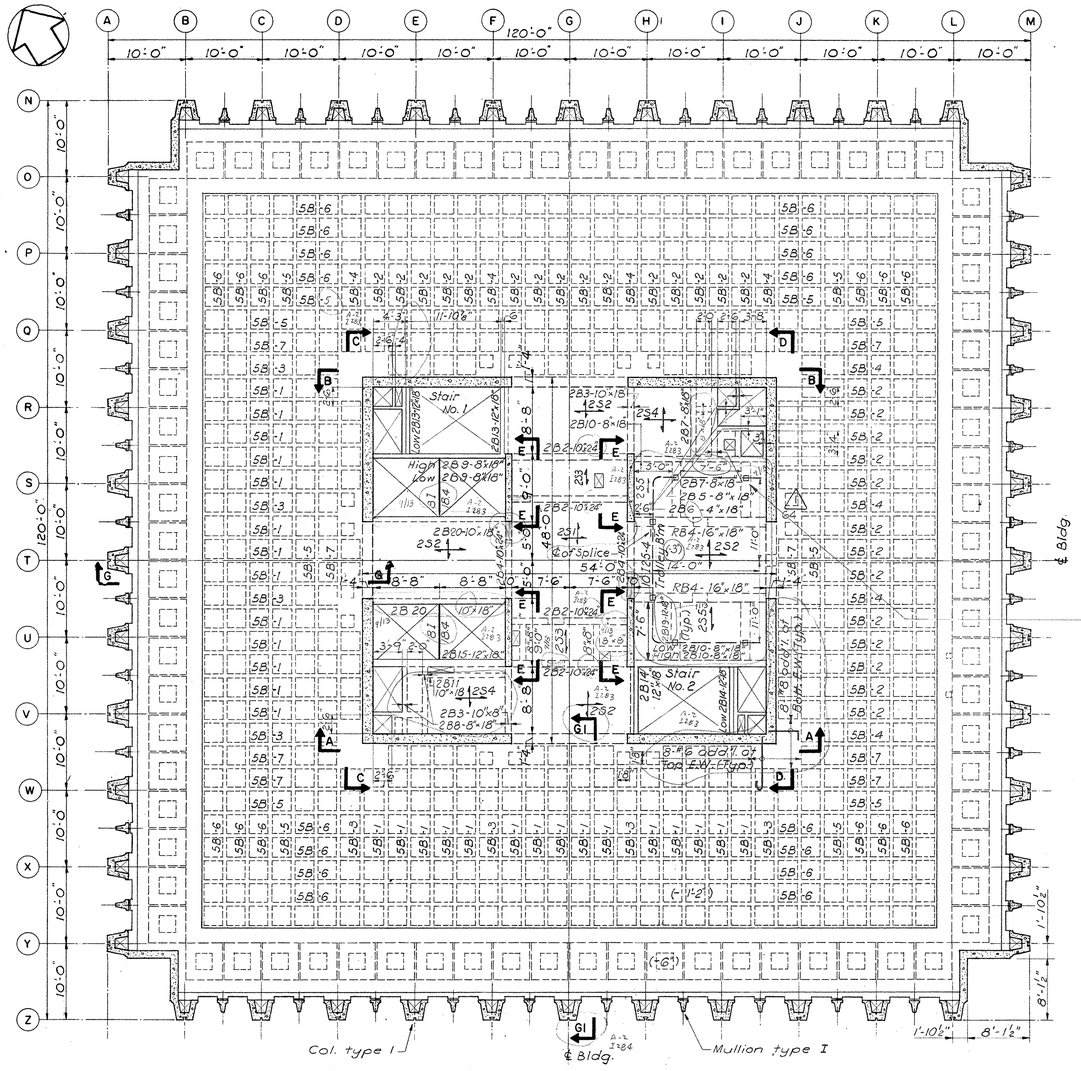
Stair No. 1
Stair No. 2
2B 20
2B20-10"x18"
2B3-10"x18"
2B10-8"x18"
2B2-10"x24"
2B9-8"x18"
2B8-8"x18"
2B7-8"x18"
2B6-4"x18"
2B5-6"x18"
2B4-4"x18"
2B15-12"x18"
RB4-16"x18"
2B11 10"x18" 2S4
2B3-10"x18" 2B8-8"x18"
2S1
2S2
2S3
2S4
2S5
2S6
2S7
2S8
2S9
2S10
2S11
2S12
2S13
2S14
2S15
2S16
2S17
2S18
2S19
2S20
2S21
2S22
2S23
2S24
2S25
2S26
2S27
2S28
2S29
2S30
2S31
2S32
2S33
2S34
2S35
2S36
2S37
2S38
2S39
2S40

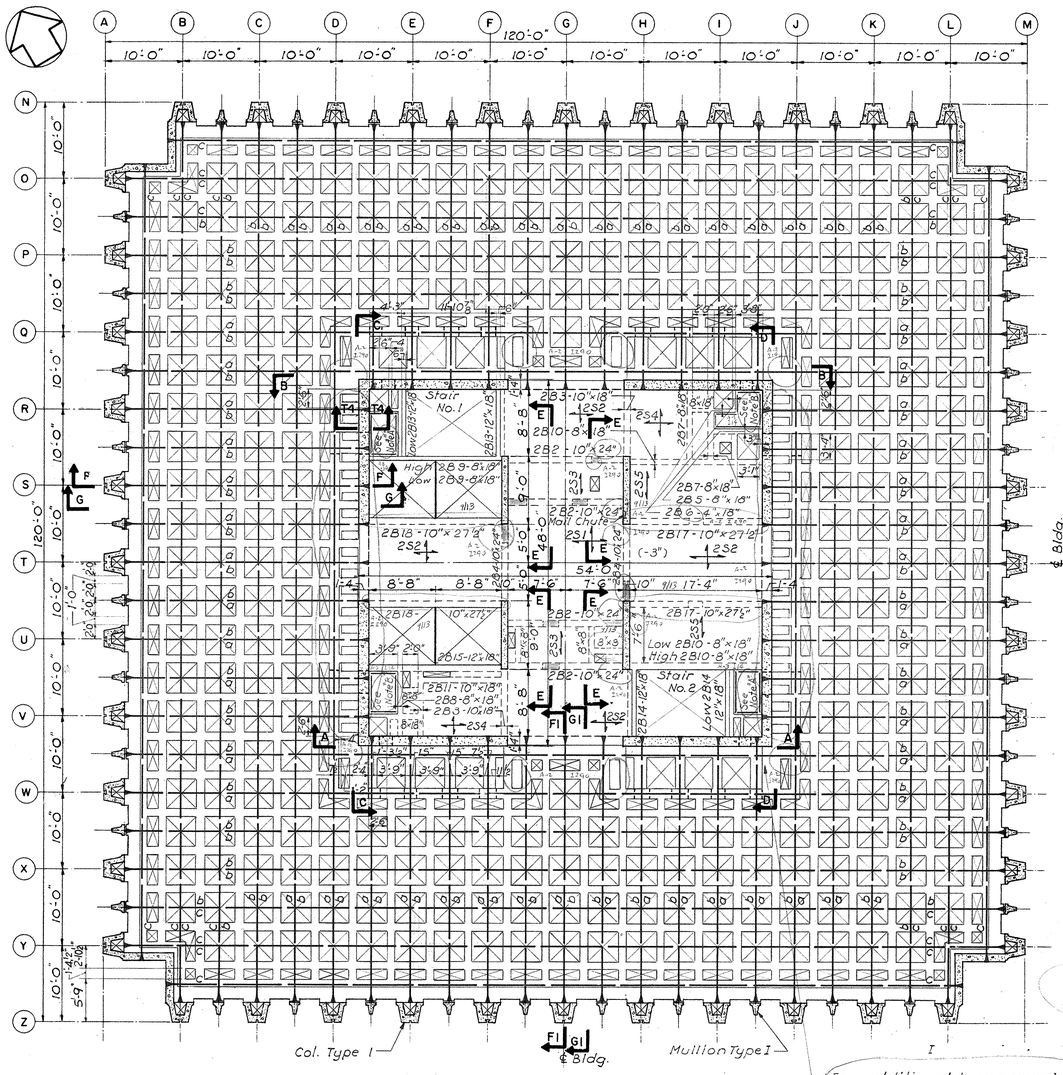

15th.-23rd. FLOOR FRAMING PLAN

CONC. FLOORS ON PERMANENT STEEL CENTERING NOT SHOWN
PRECAST UNITS NOT SHOWN
DATUM - TOP OF FINISHED FLOOR
Scale: 1/8"=1'-0"

For additional beam openings in this area see Dwg. No. 346. Typical all four corners

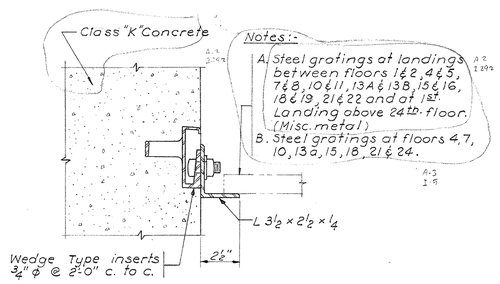

SECTION T4-T4
Scale: 3"=1'-0"

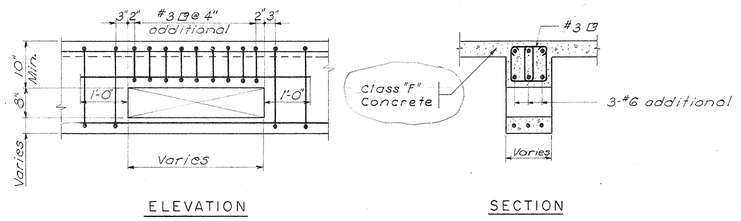

ELEVATION SECTION

ADDITIONAL REINFORCEMENT FOR OPENINGS IN CORE BEAMS
Scale: ¾"= 1'-0"

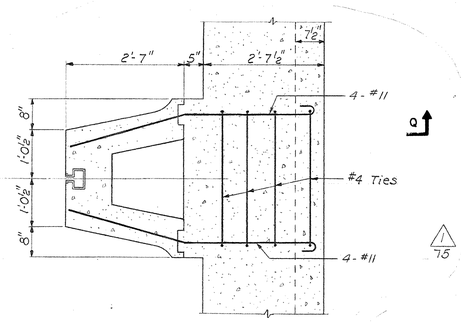

SECTIONAL PLAN

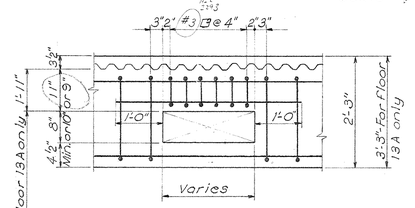

ELEVATION SECTION

ADDITIONAL REINFORCEMENT FOR BEAM OPENINGS IN OFFICE AREA
Scale: ¾"=1'-0"

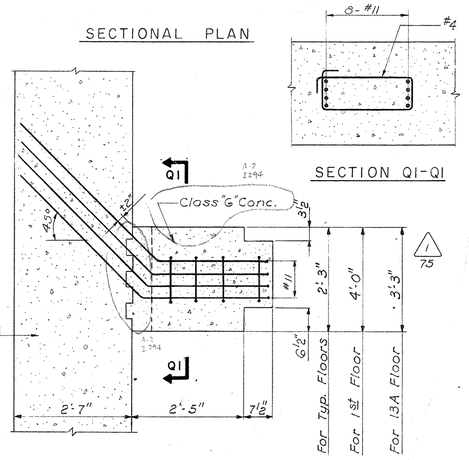

SECTION Q1-Q1

SECTION Q-Q

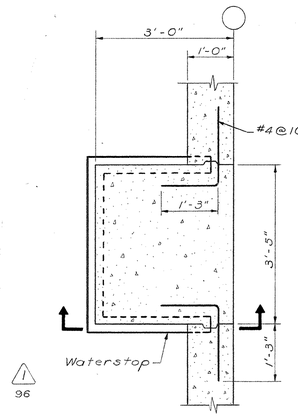

PLAN

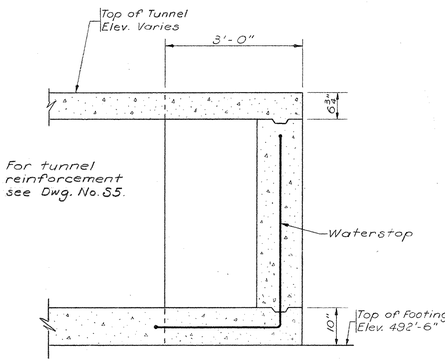

SECTION

TYPICAL WATERSTOP DETAIL AT COLUMN & TUNNEL INTERSECTION
Scale: ¾"= 1'-0"

TYPICAL COLUMN & SPANDREL BEAM CONNECTIONS
Scale: ¾" = 1'-0"

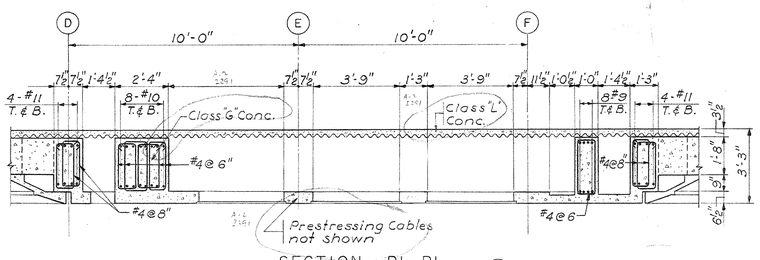

SECTION P1-P1
Scale: ⅜"= 1'-0"

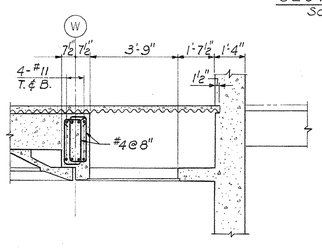

SECTION P2-P2
Scale: ⅜"=1'-0"

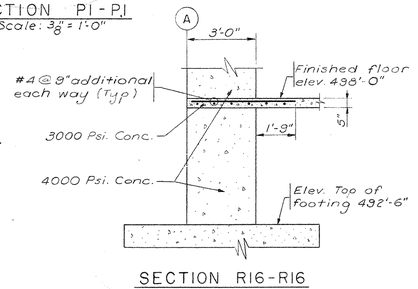

SECTION R16-R16
Scale: ⅜"=1'-0"

FINISHED FLOOR ELEVATIONS	
15th Floor	706'-0"
16th Floor	717'-0"
17th Floor	728'-0"
18th Floor	739'-0"
19th Floor	750'-0"
20th Floor	761'-0"
21st Floor	772'-0"
22nd Floor	783'-0"
23rd Floor	794'-0"

NOTES

1. For General Notes and Typical Details, Dwg. No. S 57
2. For Column Schedule and Corner Wall Details, see Dwg. No. S 32.
3. For Stairs No.1 & No.2, see Dwg. No. S 55.
4. For Sections A-A, B-B, C-C, D-D, & E-E see Dwg. No. No. S 56.
5. The top of the structural slab is (-3½") unless otherwise noted.
6. All concrete slabs are 4" thick unless otherwise noted.
7. For Precast Concrete, see Dwg. No. 53.
8. For Sections F-F, G-G, F1-F1 and G1-G1 see Dwg. No. S46.
9. For location of Sections P1-P1 & P2-P2 see Dwg. No. S47.
10. For Core Beams & Slab Schedules, see Dwg. No. S46.

LOAD SCHEDULE			
CORE		OFFICE	
Dead Load *		Dead Load	
3" Terrazzo	40 p.s.f.	3½" Conc. floor on steel centering	40 p.s.f.
4" Slab	39 p.s.f.		
Hung Ceiling	10 p.s.f.	Average framing	90 p.s.f.
Mechanical	5 p.s.f.		130 p.s.f.
	94 p.s.f.		
Live Load	100 p.s.f.	Live Load	100 p.s.f.

* Beam & partitions included separately.

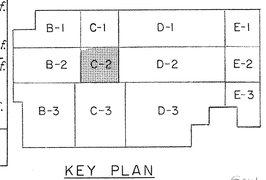

KEY PLAN
No Scale

Change Proposal No.1
All circled areas noted thus 1 Item No.

Sept. 13, 1968
TRACINGS CONFORMED TO ADDENDA 11-1-67

STATE OF KENTUCKY — RICHARD Q. PRAEGER No. 6175 — REGISTERED PROFESSIONAL ENGINEER

AS-BUILT ERECTION
[illegible] CORPORATION, INC.

PRAEGER-KAVANAGH-WATERBURY
STRUCTURAL-ENGINEERS
R.Q. PRAEGER, Partner

CAPITAL PLAZA OFFICE BUILDING
FRANKFORT, KENTUCKY

DRAWN BY	15th-23rd FLOOR FRAMING PLAN	DATE	15 MAY 67
TRACED BY	ARCHITECT EDWARD DURELL STONE 7 EAST 67TH STREET NEW YORK N.Y.	SCALE	AS NOTED
CHECKED BY		COMM. NO.	50066
SECTOR NO. C 2	ASSOCIATE ARCHITECTS & ENGINEERS LEE POTTER SMITH & ASSOCIATES 314 WILKINSON FRANKFORT, KENTUCKY	DRAWING NO.	S49
	COMMONWEALTH OF KENTUCKY DEPARTMENT OF FINANCE – ENGINEERING STAFF FRANKFORT, KENTUCKY	OF	71

APPROVED BY ARCHITECT DATE
APPROVED BY ACTING HEAD DATE
APPROVED BY OWNER DATE

CPA-125

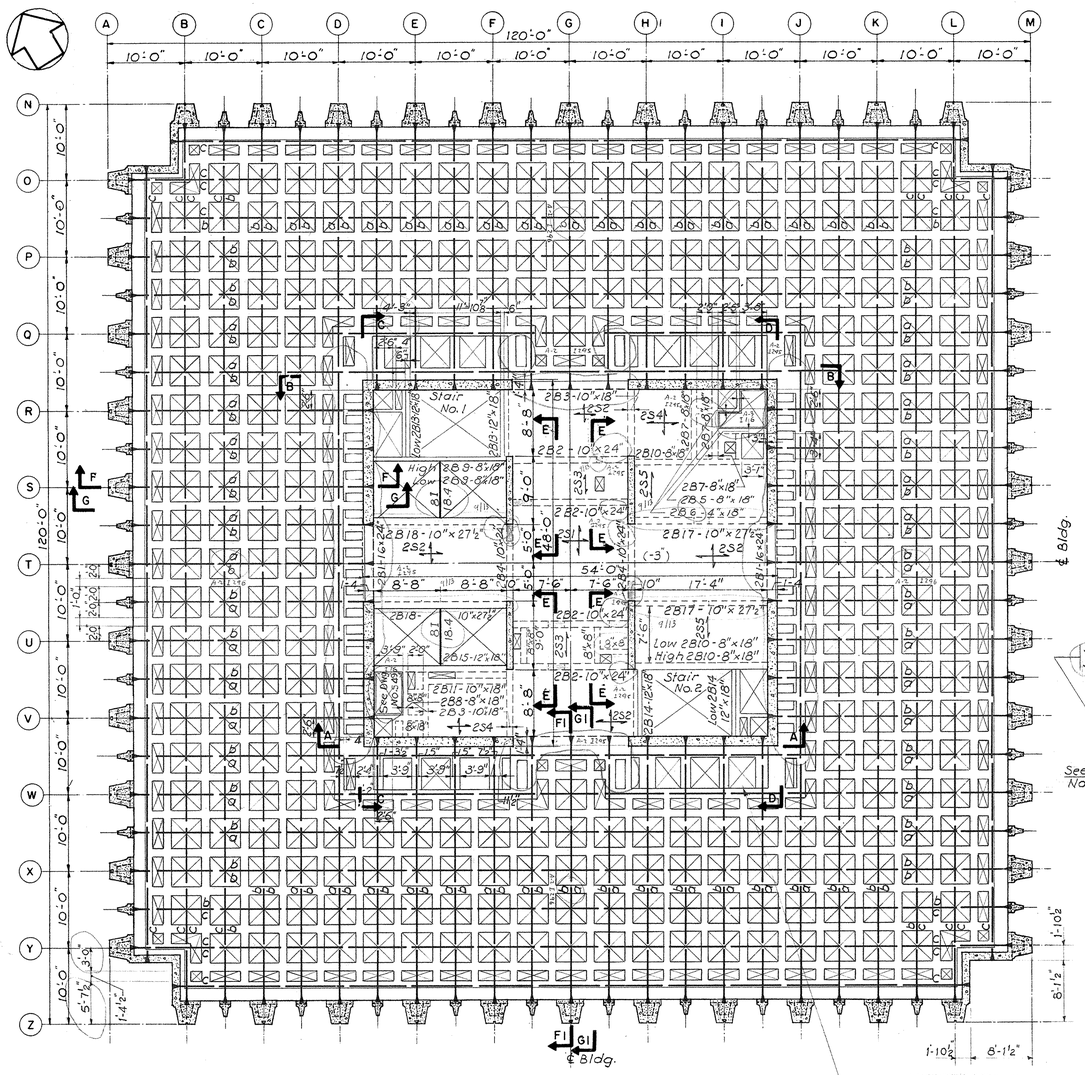

24TH FLOOR FRAMING PLAN

CONC. FLOORS ON PERMANENT STEEL CENTERING NOT SHOWN

PRECAST UNITS NOT SHOWN

DATUM — TOP OF FINISHED FLOOR ELEV. 805.0'

Scale: 1/8" = 1'-0"

TABLE 3	
10" CONC. WALL BARS "C"	
15th Fl. to roof	#8
8th Fl. to 15th	#9
3rd Fl. to 8th	#10
Ftgs. to 3rd Fl.	#11

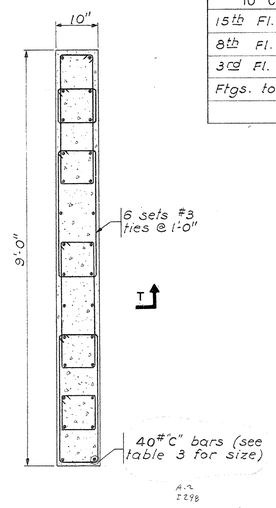

SECTIONAL PLAN

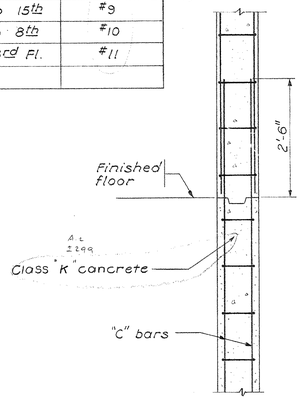

SECTION T-T

TABLE 4			
FLOORS	"A" BARS	"B" BARS	TIES
15th Fl. to roof	#8	#8	—
8th Fl. to 15th	#9	#9	#3 @ 15"
3rd Fl. to 8th	#10	#10	#3 @ 12"
Ftgs. to 3rd Fl.	#11	#11	#3 @ 12"

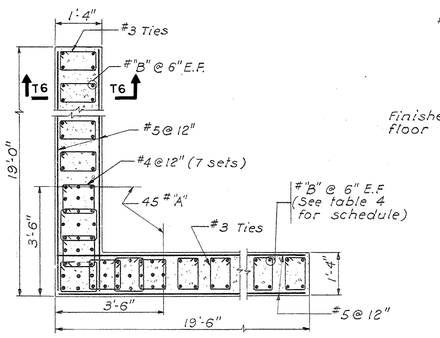

SECTIONAL PLAN

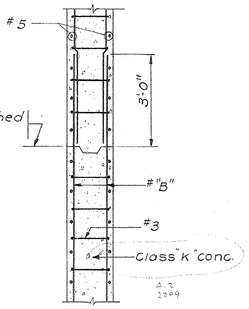

SECTION T6-T6

TYPICAL REINFORCEMENT FOR 10" CORE WALL

Scale: 3/4" = 1'-0"

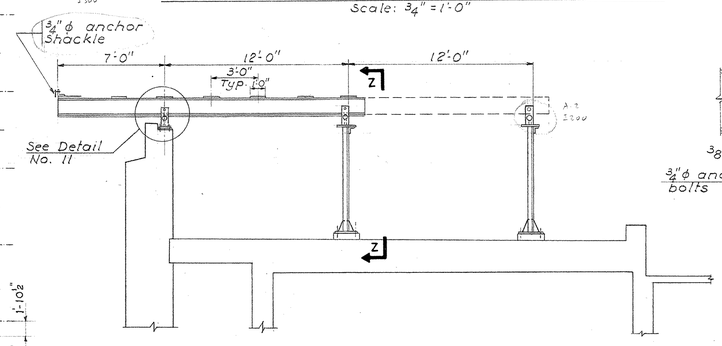

ELEVATION

Scale: 1/4" = 1'-0"

TYPICAL REINFORCEMENT FOR 16" CORE WALL

Scale: 1/2" = 1'-0"

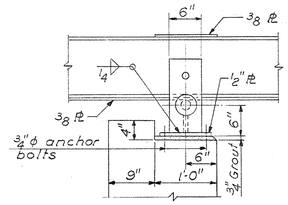

DETAIL NO. 11

Scale: 1" = 1'-0"

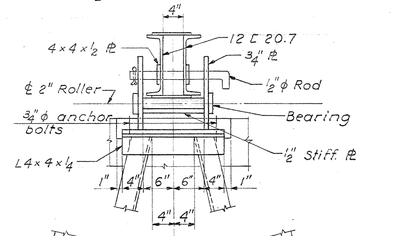

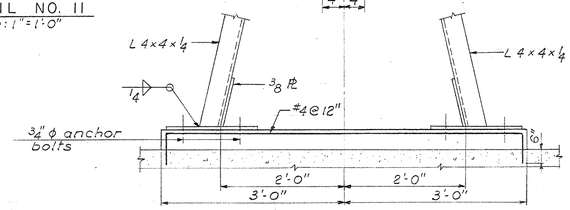

SECTION Z-Z

Scale: 1" = 1'-0"

SEE CHANGE ORDER No. 16, ITEM No. 2.

EQUIPMENT OUT-RIGGER

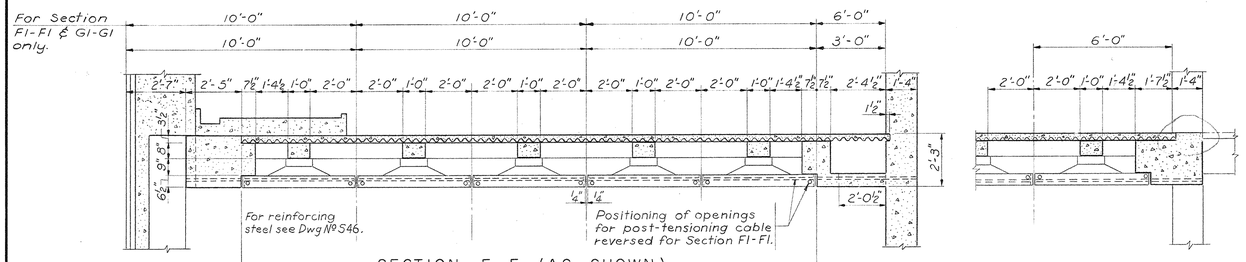

SECTION F-F (AS SHOWN)

SECTION F1-F1 (AS NOTED)

Scale: 3/8" = 1'-0"

FOR SECTION F1 ONLY

Scale: 3/8" = 1'-0"

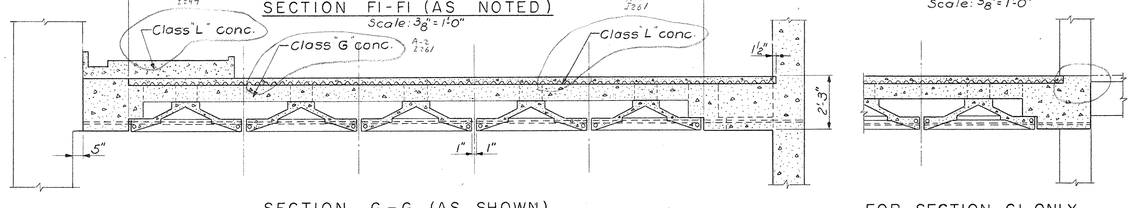

SECTION G-G (AS SHOWN)

SECTION G1-G1 (AS NOTED)

Scale: 3/8" = 1'-0"

FOR SECTION G1 ONLY

Scale: 3/8" = 1'-0"

NOTES

1. For General Notes and Typical Details, Dwg. No. S 57
2. For Column Schedule and Corner Wall Details, see Dwg. No. S 52.
3. For Stairs No. 1 & No. 2, see Dwg. No. S 55.
4. For Sections A-A, B-B, C-C, D-D & E-E See Dwg. No. S 56.
5. The top of the structural slab is (-3½") unless otherwise noted.
6. All concrete slabs are 4" thick unless otherwise noted.
7. For Precast Concrete, see Dwg. No. S 53.
8. For limits of concrete Floors on Permanent Steel centering, see Dwg. No. S 46.
9. For pretressing Cable schedule, see Dwg. No. S46
10. For Core Beams and Slab schedule, see Dwg. No. S46.

LOAD SCHEDULE			
CORE		OFFICE	
Dead Load *			
3" Terrazzo	40 p.s.f.	3½" conc. floor on steel centering	40 p.s.f.
4" Slab	39 p.s.f.		
Hung Ceiling	10 p.s.f.	Average framing	90 p.s.f.
Mechanical	5 p.s.f.		130 p.s.f.
	94 p.s.f.		
Live Load	100 p.s.f.	Live Load	100 p.s.f.

* Beams & partitions included separately

NOTE: SUPPLEMENTAL INFORMATION THIS SHEET SEE CHANGE ORDER DWG. No. 16 ITEM No. 2 DATED 1 DEC 68 INCLUDED AS PART OF AS-BUILT DRAWINGS AS OF JAN. 73

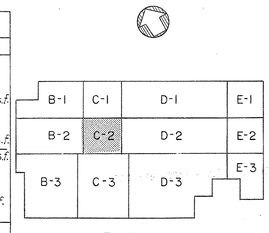

KEY PLAN

No Scale

Sept. 13, 1968

TRACINGS CONFORMED TO ADDENDA 11 & 13

STATE OF KENTUCKY — RICHARD Q. PRAEGER No. 6175 — REGISTERED PROFESSIONAL ENGINEER

PRAEGER-KAVANAGH-WATERBURY

STRUCTURAL-ENGINEERS

R.Q. PRAEGER, Partner

CAPITAL PLAZA OFFICE BUILDING

FRANKFORT, KENTUCKY

DRAWN BY	24th FLOOR FRAMING PLAN	DATE	15 MAY 67
TRACED BY	ARCHITECT EDWARD DURELL STONE 7 EAST 67TH STREET NEW YORK N.Y.	SCALE	AS NOTED
CHECKED BY J.Z.		COMM. NO.	50066
SECTOR NO. C2	ASSOCIATE ARCHITECTS & ENGINEERS LEE POTTER SMITH & ASSOCIATES 314 WILKINSON FRANKFORT, KENTUCKY COMMONWEALTH OF KENTUCKY DEPARTMENT OF FINANCE — ENGINEERING STAFF FRANKFORT, KENTUCKY	DRAWING NO.	S 50 OF 71

APPROVED BY ARCHITECT DATE

APPROVED BY AGENCY HEAD DATE

APPROVED BY OWNER DATE MAY 24 1967

CPA-126

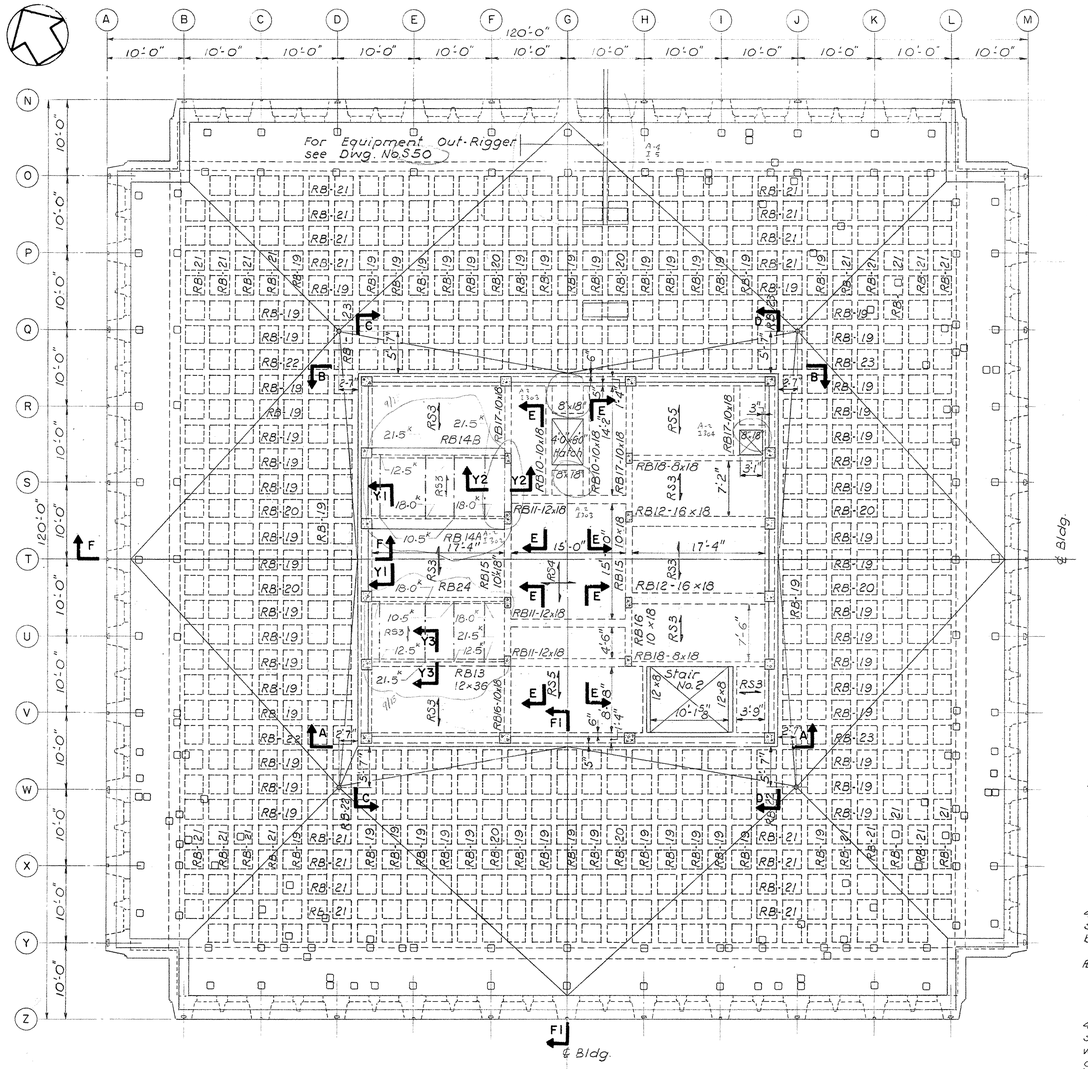

MAIN ROOF & PENTHOUSE FLOOR FRAMING PLAN

DATUM—TOP OF P.H. FLOOR SLAB ELEV. 826'-0"

Scale: 1/8" = 1'-0"

SLAB SCHEDULE						
MARK	SIZE	TOP STEEL		BOTTOM STEEL		REMARKS
		LW	SW	LW	SW	
RS1	4"	#3@12"	#3@12"	#3@12"	#3@8"	
RS2	4"	#3@12"	#3@12"	#3@12"	#3@12"	
RS3	4"	#3@12"	#3@6"	#3@12"	#4@6"	
RS4	6"	#4@6"	#4@6"	#4@6"	#4@6"	
RS5	4"	#3@8"	#3@8"	#4@8"	#4@8"	

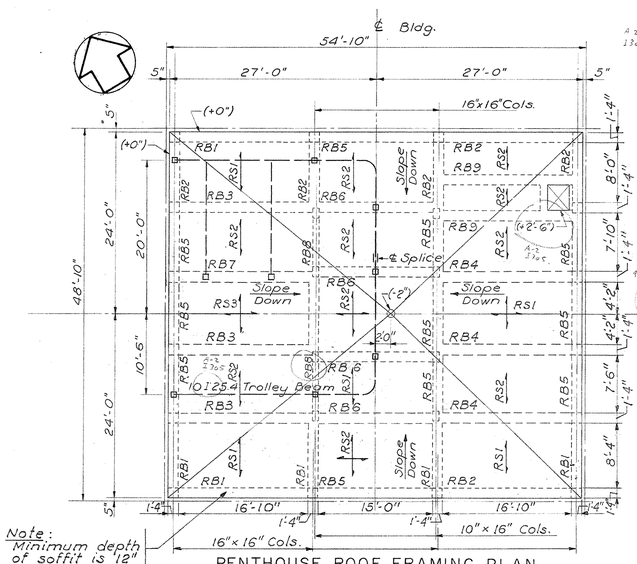

Note: Minimum depth of soffit is 12"

PENTHOUSE ROOF FRAMING PLAN

DATUM – ELEV. 836'-0"

Scale: 1/8" = 1'-0"

ROOF & PENTHOUSE BEAM SCHEDULE									
BEAM MARK	SIZE	STEEL	LOCATION	FACE WEST OR SOUTH SUPPORT		FACE EAST OR NORTH SUPPORT	STIRRUPS OR TIES SIZE & SPACING	TYPE	REMARKS
RB1	16x Varies	2-#6	Top	3'-3"	1'-6"		#3 @ 8"		RB2 opposite hand
RB2		2-#8	Bot.	1'-2" 1'-2"	Varies	Cont. 1'-2"			
RB3	16x Varies	3-#6	Top	3'-3"	1'-6"		#3 @ 8"		RB4 opposite hand
RB4		3-#8	Bot.	1'-2" 1'-2"	16'-10"	Cont. 1'-2"			
RB5	16x Varies	2-#6	Top	Cont. 1'-2"	Varies	Cont. 1'-2"	#3 @ 8"		
RB6	16x Varies	2-#8	Bot.						
		3-#6	Top	Cont. 1'-2"	15'-0"	Cont. 1'-2"	#3@8"		
		3-#8	Bot.						
RB7	16x Varies	4-#6	Top	3'-3"	1'-6"		#4@7"		
		4-#8	Bot.	1'-2" 1'-2"	16'-10"	Cont. 1'-2"			
RB8	10x Varies	2-#6	Top	Cont. 1'-2"	7'-4"	Cont. 1'-2"	#3@8"		
		2-#8	Bot.						
RB9	16x Varies	3-#6	Top	10" 1'-2"	16'-10"	1'-2" 1'-2" 10"	#3@8"		
		3-#8	Bot.						
RB10	10x18	2-#6	Top	1'-3" 10"	14'-10"	1'-2" 1'-2" 1'-3"	#3@8"		
		2-#8	Bot.	10"					
RB11	12x18	3-#7	Top	4'-3"	2'-6" 2'-6"		#4@8"		
		3-#9	Bot.	8" 8"	15'-0"	8" 8" 4'-3"			
RB12	16x18	3-#7	Top	4'-3"	2'-6" 2'-6"		#4@8"		
		3-#9	Bot.	8" 8"	17'-4"	1'-2" 1'-2" 4'-3"			
RB13	12x42	5-#7	Top	4'-6"	1'-2" 2'-6" 3'-0" 8"		#4@5"		See section Y3-Y3
RB24	10x42	8-#8	Bot.	1'-2"	17'-4"	8" 4'-6"			
RB14A	20x42	4-#8	Top	3'-0"	1'-2" 17'-4"	8" 3'-0"	#4@6"		See section Y1-Y1
RB14B	16x42	3-#7 3-#9	Top Bot.		1'-2" 17'-4"	8"			
RB15	10x18	2-#6	Top	1'-3"	2'-3" Varies	2'-3" 1'-6"	#3@8"		
		2-#8	Bot.	1'-6"					
RB16 RB17		2-#6 2-#8	Top Bot.	1'-3"	1'-2" Varies	2'-3" 1'-6"	#3@8"		RB17 opposite hand
RB18	8x18	2-#8	Top	1'-3"	6" 17'-4"	1'-2" 1'-3"	#3@6"		
		2-#11	Bot.	8"					
RB19		2-#8	Top	4'-6"	2'-0" 2'-0"		#3@12"		
		2-#8	Bot.	1'-8" 1'-6"	Varies	1'-8" 1'-6" 4'-6"			
RB20		2-#10	Top	4'-6"	2'-0" 2'-0"		#4@8"		For beams size, see Section F-F
		2-#10	Bot.	1'-8" 1'-6"	Varies	1'-8" 1'-6" 4'-6"			
RB21		2-#6	Top	4'-6"	2'-0" 2'-0"				
		2-#6	Bot.	1'-8" 1'-6"	Varies	1'-8" 1'-6" 4'-6"			
RB22		2-#10	Top	4'-6"	2'-0"		#4@8"		RB23 opposite hand
RB23		2-#10	Bot.	1'-8" 1'-6"	Varies	4'-0" 1'-6"			

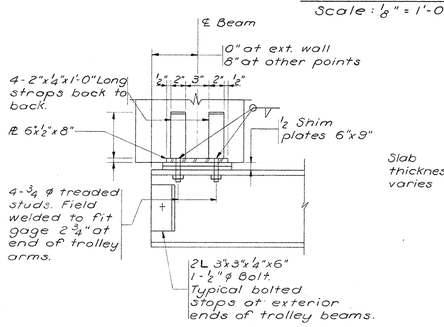

DETAIL 12

TROLLEY BEAM SUPPORT

Scale: 1½" = 1'-0"

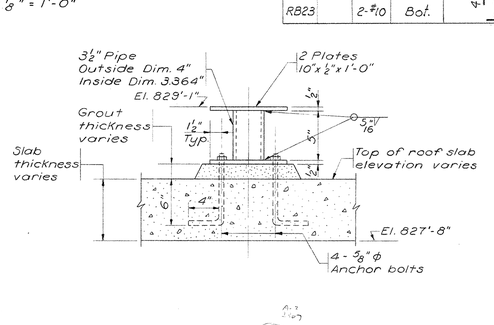

DETAIL 13

WINDOW CLEANING TRACT SUPPORT

Scale: 1½" = 1'-0"

LOAD SCHEDULE			
PENTHOUSE FLOOR		MAIN ROOF	
Dead Load *		Dead Load *	
4" Slab	39 p.s.f.	2" Rigid Insulation	2 p.s.f.
Hung Ceiling	10 p.s.f.	Roofing	6 p.s.f.
Mechanical	5 p.s.f.	Hung Ceiling	10 p.s.f.
	54 p.s.f.	Average Framing	132 p.s.f.
			150 p.s.f.
Live Load	200 p.s.f.	Live Load	40 p.s.f.

* Beams & partitions included separately

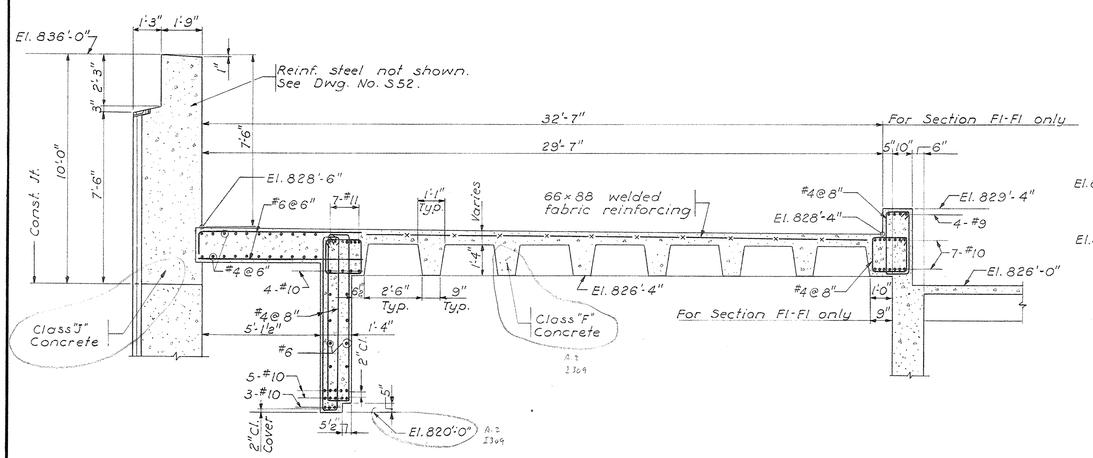

SECTION F-F (AS SHOWN)

SECTION F1 F1 (AS NOTED)

Scale: ⅜" = 1'-0"

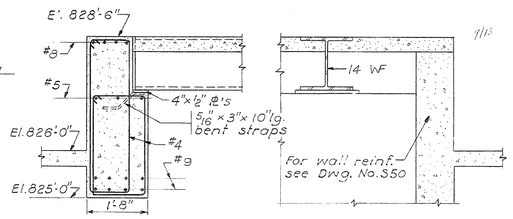

SECTION Y1-Y1

Scale: ¾" = 1'-0"

SECTION Y2-Y2

Scale: ¾" = 1'-0"

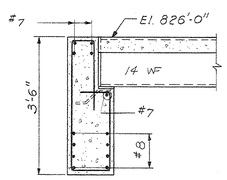

SECTION Y3-Y3

Scale: ¾" = 1'-0"

NOTES

1. For General Notes & Typical Details, see Dwg. No. S57.
2. For Column Schedule & Corner Wall Details, see Dwg. No. S52.
3. For Stair No. 2 see Dwg. No. S55.
4. For Sections A-A, B-B, C-C, D-D & E-E see Dwg. No. S56
5. All concrete slabs are 4" thick unless otherwise noted.

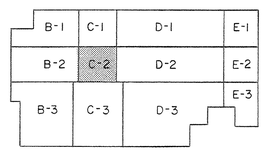

KEY PLAN

No Scale

Sept. 13, 1966

TRACINGS CONFORMED TO ADDENDA 11-1-67

CAPITAL PLAZA OFFICE BUILDING

FRANKFORT, KENTUCKY

DRAWN BY	MAIN ROOF & PENTHOUSE FLOOR FRAMING PLAN	DATE 15 MAY 67
TRACED BY		SCALE AS NOTED
CHECKED BY J.L.	ARCHITECT EDWARD DURELL STONE 7 EAST 67TH STREET NEW YORK N. Y.	COMM. NO. 50066
SECTOR NO. C2	ASSOCIATE ARCHITECTS & ENGINEERS LEE POTTER SMITH & ASSOCIATES 314 WILKINSON FRANKFORT, KENTUCKY	DRAWING NO. S 51
	COMMONWEALTH OF KENTUCKY DEPARTMENT OF FINANCE – ENGINEERING STAFF FRANKFORT, KENTUCKY	OF 71

STATE OF KENTUCKY ★ RICHARD Q. PRAEGER No. 6175 ★ REGISTERED PROFESSIONAL ENGINEER

PRAEGER-KAVANAGH-WATERBURY
STRUCTURAL-ENGINEERS

R.Q. PRAEGER, Partner

APPROVED BY ARCHITECT DATE

APPROVED BY AGENCY HEAD DATE

APPROVED BY W.T. McConnell OWNER DATE MAY 15 1967

CPA-127

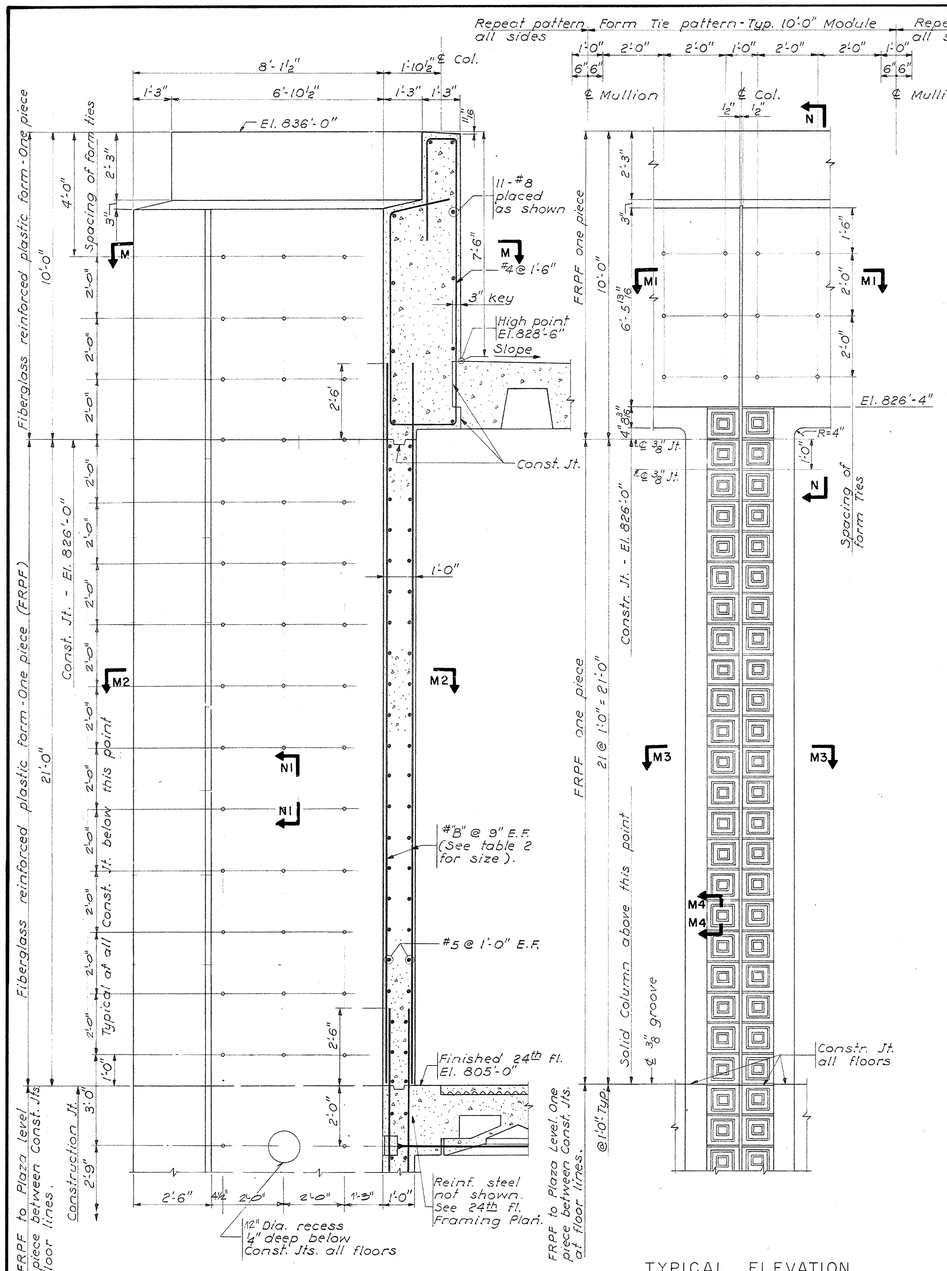

TYPICAL ELEVATION - CORNER WALLS
Scale: ½" = 1'-0"

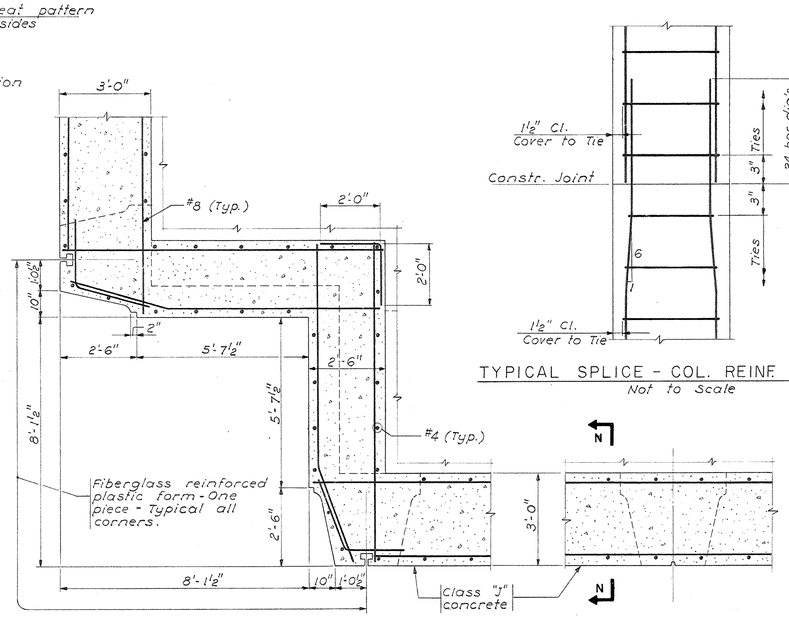

SECTION M-M
Scale: ½" = 1'-0"

SECTION MI-MI
Scale: ½" = 1'-0"

TYPICAL SPLICE - COL. REINF. STEEL
Not to Scale

COLS. / FLOOR	AN, AZ MN, MZ	X'B', X'L' W'D', W'J' FW', HW"
Fin. Lobby Fl. El. 819'-0"	10 × 25 6 - #6	
Fin. Mezz. Fl. El. 508'-0"	10 × 25 6 - #6	10 × 16 6 - #5
Fin. Ground Fl. El. 498'-0"		

COL. / FLOOR	SEE PLAN FOR LOCATION	
Penthouse Roof El. 835'-10" (Low Point)	16 × 16 4 - #9	10 × 16 6 - #8
Penthouse Fl. El. 826'-0"		

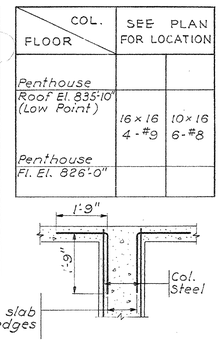

ADD'L REINF. AT TOPS OF COLUMNS
N.T.S.

COLUMN SCHEDULES

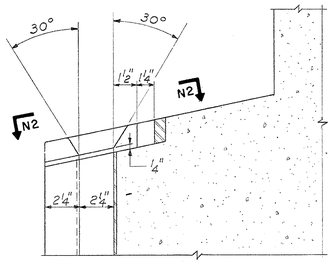

DETAIL 5
Scale: 3" = 1'-0"

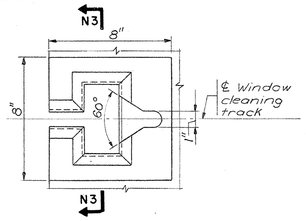

SECTION N2-N2
Scale: 3" = 1'-0"

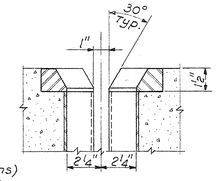

SECTION N3-N3
Scale: 3" = 1'-0"

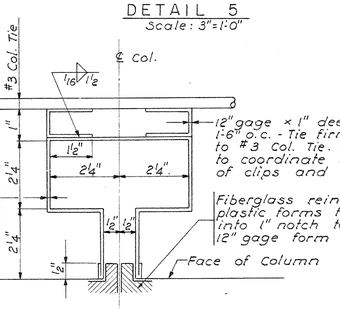

DETAIL 6
Scale: Half Size

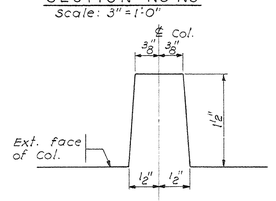

TYPICAL DETAIL
DUMMY WINDOW CLEANING SLOT AT ALT. EXT. COLUMNS
Scale: Full Size

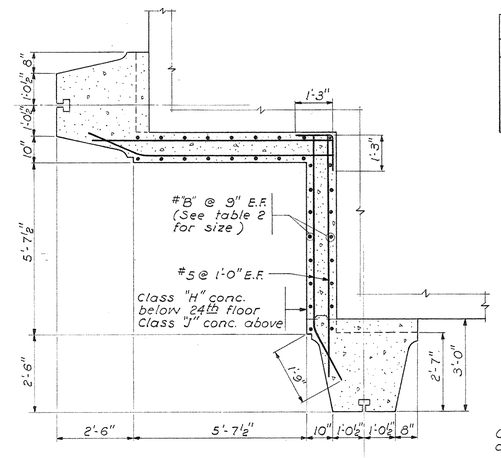

SECTION M2-M2
Scale: ½" = 1'-0"

TABLE 2 WALL BARS "B"	
8th Fl. to Roof	#9
3rd Fl. to 8th	#10
Ftgs to 3rd Fl.	#11

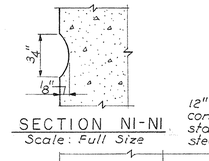

SECTION NI-NI
Scale: Full Size

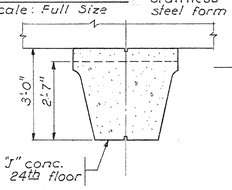

SECTION M3-M3
Scale: ½" = 1'-0"

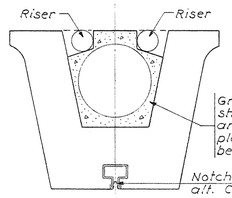

DUCT GROUTING
TYPICAL EXTERIOR COLUMNS
Scale: 1" = 1'-0"

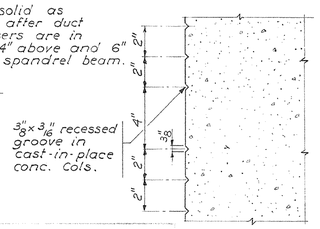

SECTION M4-M4
Scale: 3" = 1'-0"

TYPICAL ELEVATION EXTERIOR COLUMNS
Scale: ½" = 1'-0"

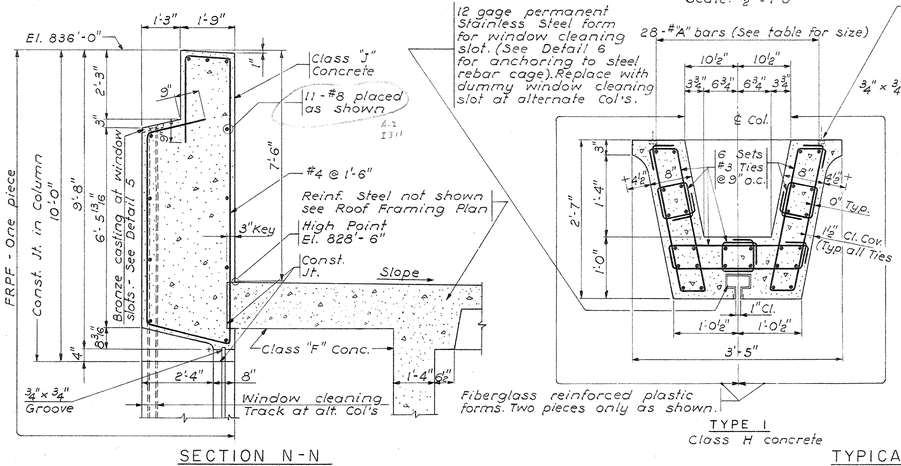

SECTION N-N
Scale: ½" = 1'-0"

TYPE 1
Class H concrete

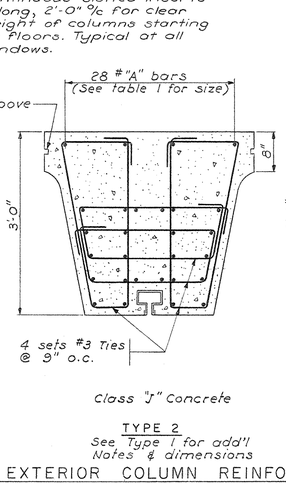

TYPE 2
See Type 1 for add'l Notes & dimensions

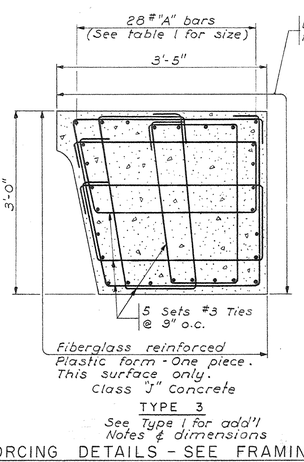

TYPE 3
See Type 1 for add'l Notes & dimensions

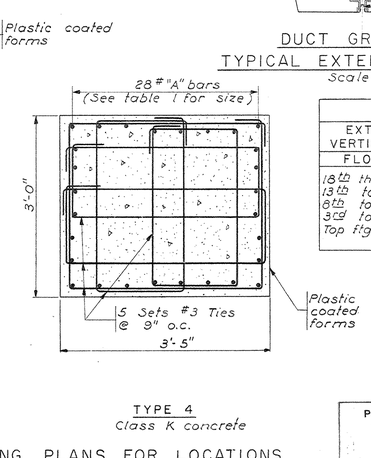

TYPE 4
Class K concrete

TABLE 1 EXTERIOR COLUMNS VERTICAL REINF. STEEL	
FLOORS	"A" BARS
18th thru Roof	#5
13th to 18th	#6
8th to 13th	#8
3rd to 8th	#9
Top ftg. thru 3rd	#9

TYPICAL EXTERIOR COLUMN REINFORCING DETAILS - SEE FRAMING PLANS FOR LOCATIONS
Scale: 1" = 1'-0"

TRACINGS CONFORMED TO ADDENDA 11-1-67

STATE OF KENTUCKY — RICHARD Q. PRAEGER — No. 6175 — REGISTERED PROFESSIONAL ENGINEER

PRAEGER-KAVANAGH-WATERBURY
STRUCTURAL-ENGINEERS
R.Q. PRAEGER, Partner

CAPITAL PLAZA OFFICE BUILDING
FRANKFORT, KENTUCKY

DRAWN BY	COLUMN SCHEDULE AND CORNER WALL DETAILS	DATE 15 MAY 67
TRACED BY	ARCHITECT EDWARD DURELL STONE 7 EAST 67TH STREET NEW YORK N.Y.	SCALE AS NOTED
CHECKED BY JJ		COMM. NO. 50066
SECTOR NO. C 2	ASSOCIATE ARCHITECTS & ENGINEERS LEE POTTER SMITH & ASSOCIATES 314 WILKINSON FRANKFORT, KENTUCKY	DRAWING NO. S 52
	COMMONWEALTH OF KENTUCKY DEPARTMENT OF FINANCE — ENGINEERING STAFF FRANKFORT, KENTUCKY	OF 71

APPROVED BY ARCHITECT DATE
APPROVED BY AGENCY HEAD DATE
APPROVED BY OWNER DATE 10-17-67

CPA-128

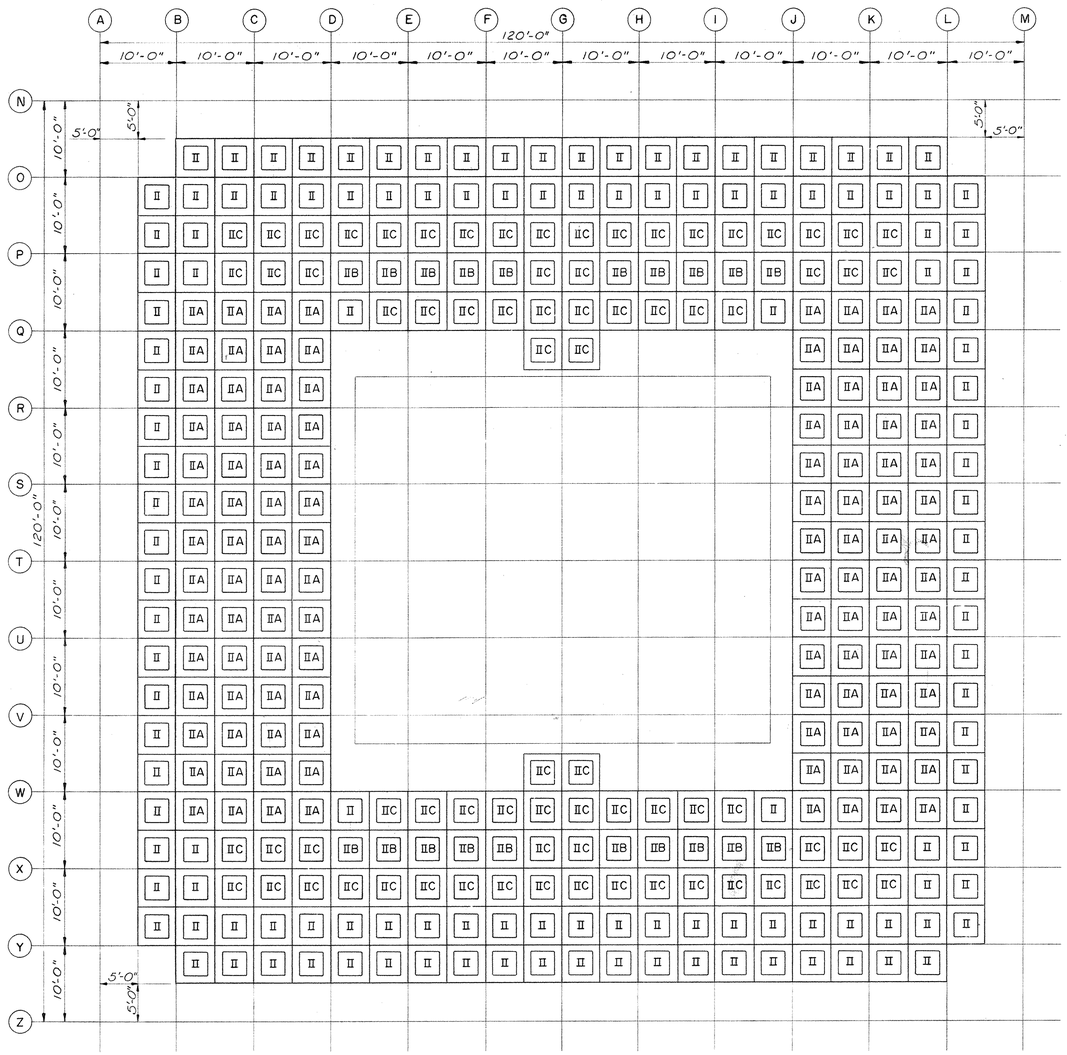

PRECAST CONCRETE FLOOR PLAN

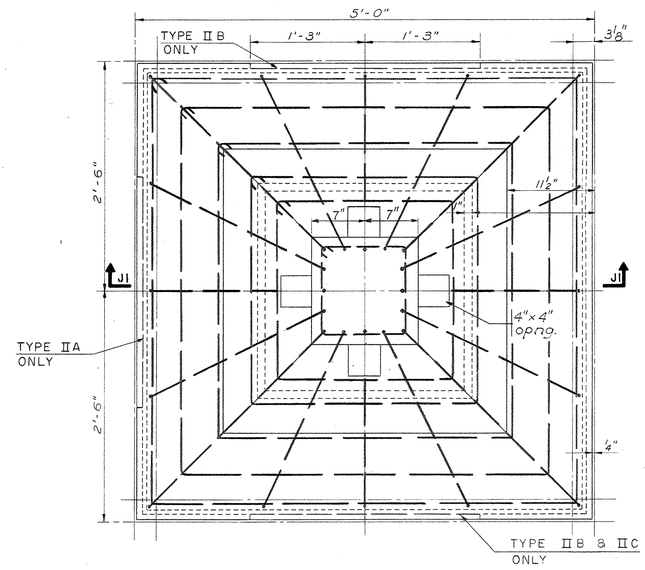

PLAN - TYPE II AS SHOWN

PLAN - TYPE IIA, IIB & IIC AS NOTED

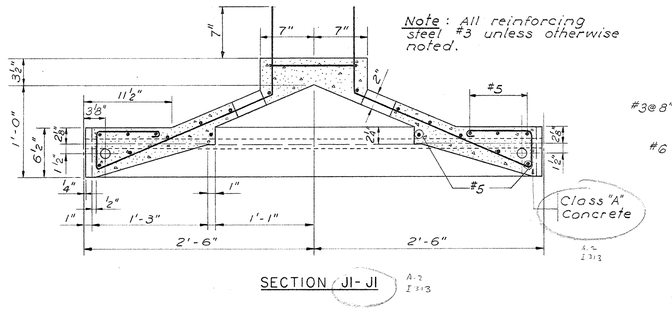

SECTION JI-JI

TYPICAL PRECAST UNIT

Scale: 1½" = 1'-0"

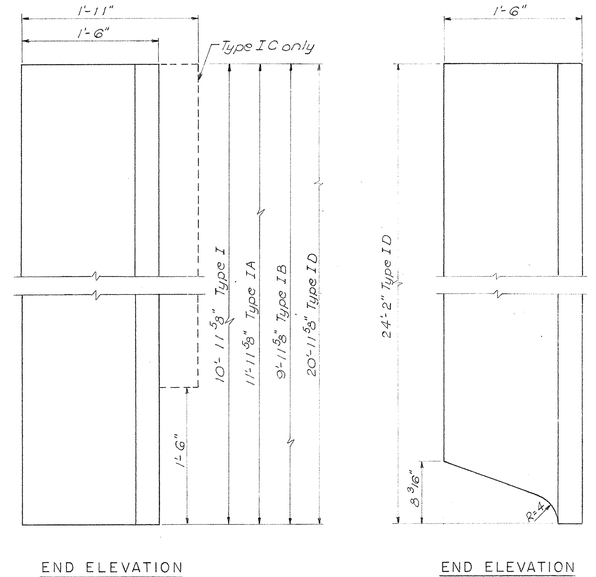

END ELEVATION

END ELEVATION

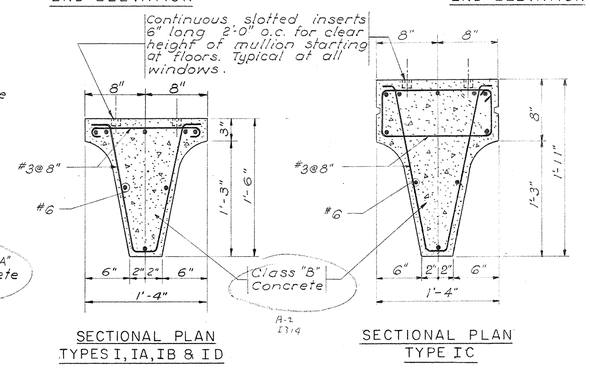

SECTIONAL PLAN TYPES I, IA, IB & ID

SECTIONAL PLAN TYPE IC

PRECAST MULLION DETAILS

Scale: 1'2" = 1'-0"

NOTE

1. For location of mullion types see floor plans.

PRECAST CONCRETE FLOOR PLAN

FLOORS 2nd-13A & 15th-24th

Scale: 1'8" = 1'-0"

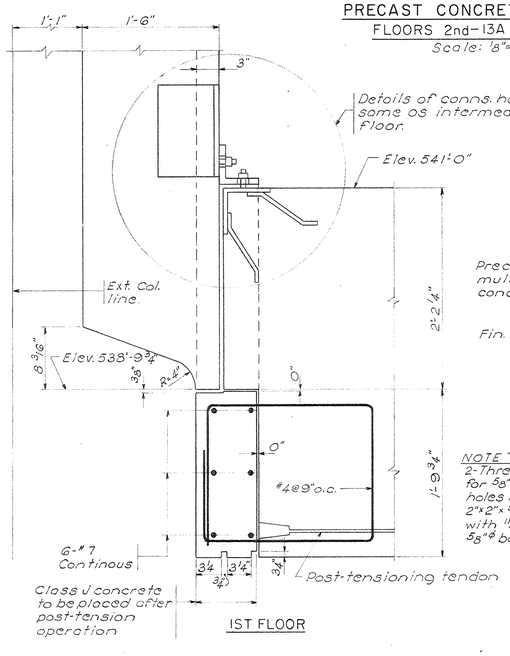

1ST FLOOR

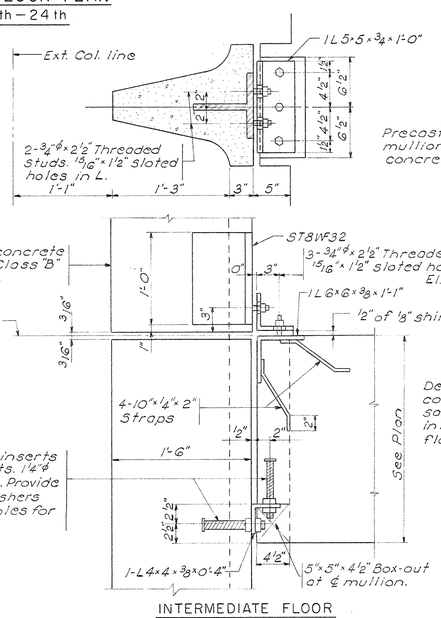

INTERMEDIATE FLOOR

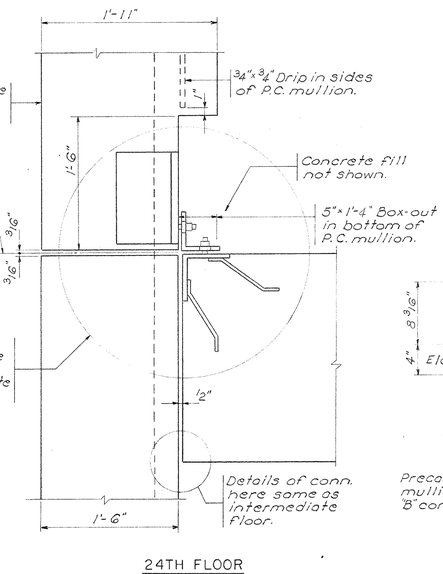

24TH FLOOR

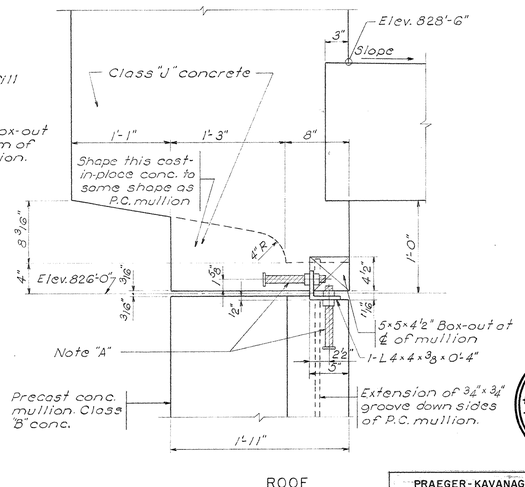

ROOF

PRECAST MULLION CONNECTION DETAILS

Scale: 1'2" = 1'-0"

STATE OF KENTUCKY
RICHARD Q. PRAEGER No. 6175 REGISTERED PROFESSIONAL ENGINEER

PRAEGER-KAVANAGH-WATERBURY
STRUCTURAL-ENGINEERS
R. Q. PRAEGER, Partner

TRACINGS CONFORMED TO ADDENDA 11-1-67

CAPITAL PLAZA OFFICE BUILDING

FRANKFORT, KENTUCKY

DRAWN BY D.T.G.	PRECAST CONCRETE I	DATE 15 MAY 67
TRACED BY	ARCHITECT EDWARD DURELL STONE 7 EAST 67TH STREET NEW YORK N.Y.	SCALE AS NOTED
CHECKED BY J.J.	ASSOCIATE ARCHITECTS & ENGINEERS LEE POTTER SMITH & ASSOCIATES 314 WILKINSON FRANKFORT, KENTUCKY	COMM. NO. 50066
SECTOR NO. C 2	COMMONWEALTH OF KENTUCKY DEPARTMENT OF FINANCE – ENGINEERING STAFF FRANKFORT, KENTUCKY	DRAWING NO. S 53 of 71

APPROVED BY ARCHITECT DATE

APPROVED BY DATE

APPROVED BY OWNER DATE

CPA-129

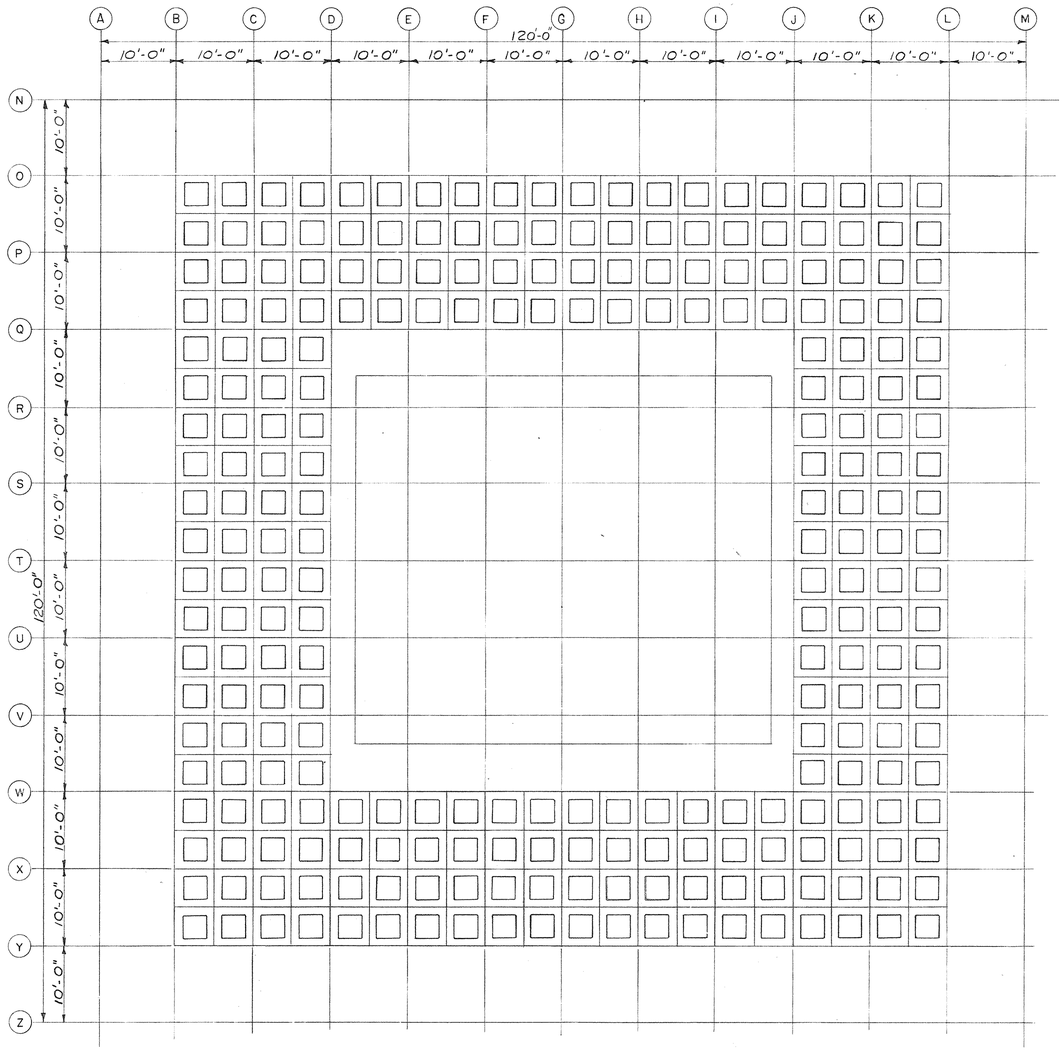

PRECAST CONCRETE FLOOR PLAN - 1st FLOOR

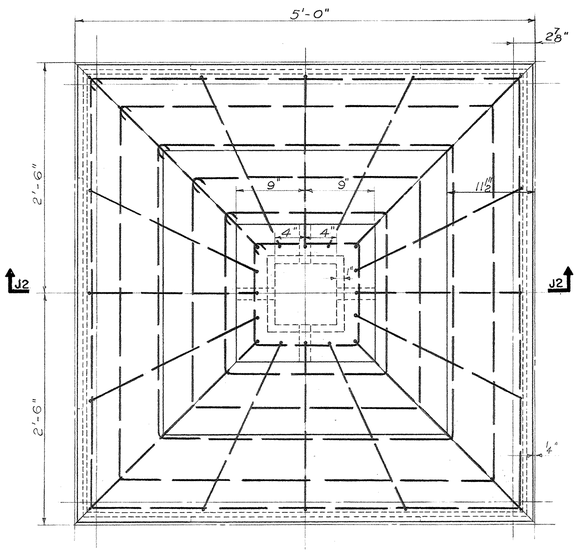

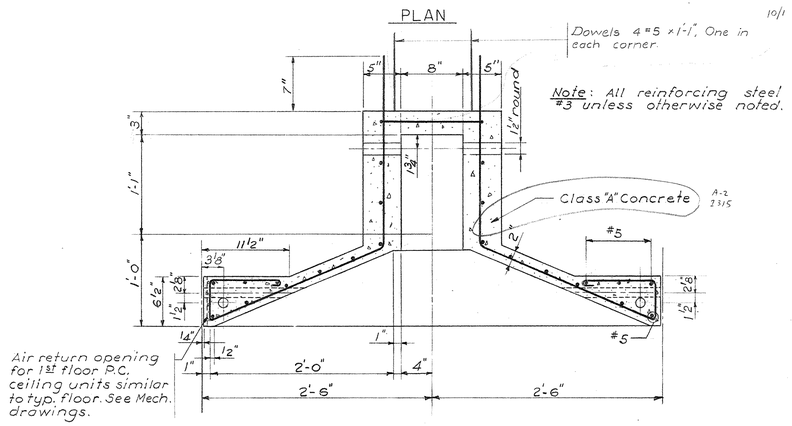

SECTION J2 - J2

TYPICAL PRECAST UNIT
Scale 1½" = 1'-0"

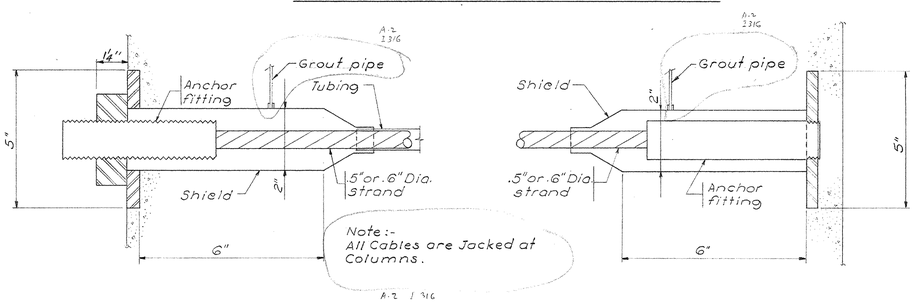

MOVABLE ANCHORAGE

FIXED END ANCHORAGE

POST-TENSIONING DETAILS
½ Scale

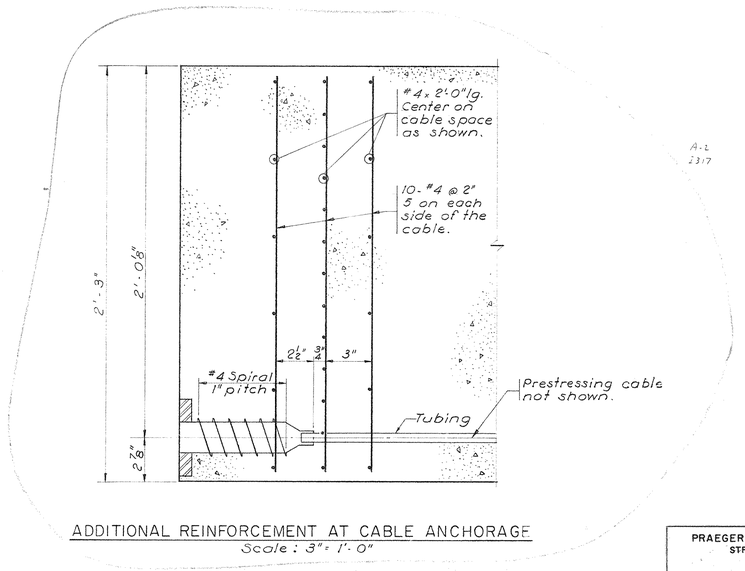

ADDITIONAL REINFORCEMENT AT CABLE ANCHORAGE
Scale : 3" = 1'-0"

A-2 2317

TRACINGS CONFORMED TO ADDENDA 11-1-67

Oct. 1st. 1968

CAPITAL PLAZA OFFICE BUILDING

FRANKFORT, KENTUCKY

DRAWN BY D.A.E.R.S.	PRECAST CONCRETE II	DATE 15 MAY 67
TRACED BY	ARCHITECT EDWARD DURELL STONE 7 EAST 67TH STREET NEW YORK N. Y.	SCALE AS NOTED
CHECKED BY J.J.		COMM. NO. 50066
SECTOR NO. C 2	ASSOCIATE ARCHITECTS & ENGINEERS LEE POTTER SMITH & ASSOCIATES 314 WILKINSON FRANKFORT, KENTUCKY	DRAWING NO. S 54 OF 71
	COMMONWEALTH OF KENTUCKY DEPARTMENT OF FINANCE — ENGINEERING STAFF FRANKFORT, KENTUCKY	

APPROVED BY _____ ARCHITECT DATE _____

APPROVED BY _____ AGENCY HEAD DATE _____

APPROVED BY _____ OWNER DATE _____

STATE OF KENTUCKY
RICHARD Q. PRAEGER
No. 6175
REGISTERED PROFESSIONAL ENGINEER

PRAEGER-KAVANAGH-WATERBURY
STRUCTURAL-ENGINEERS
R.Q. PRAEGER, Partner

CPA-130

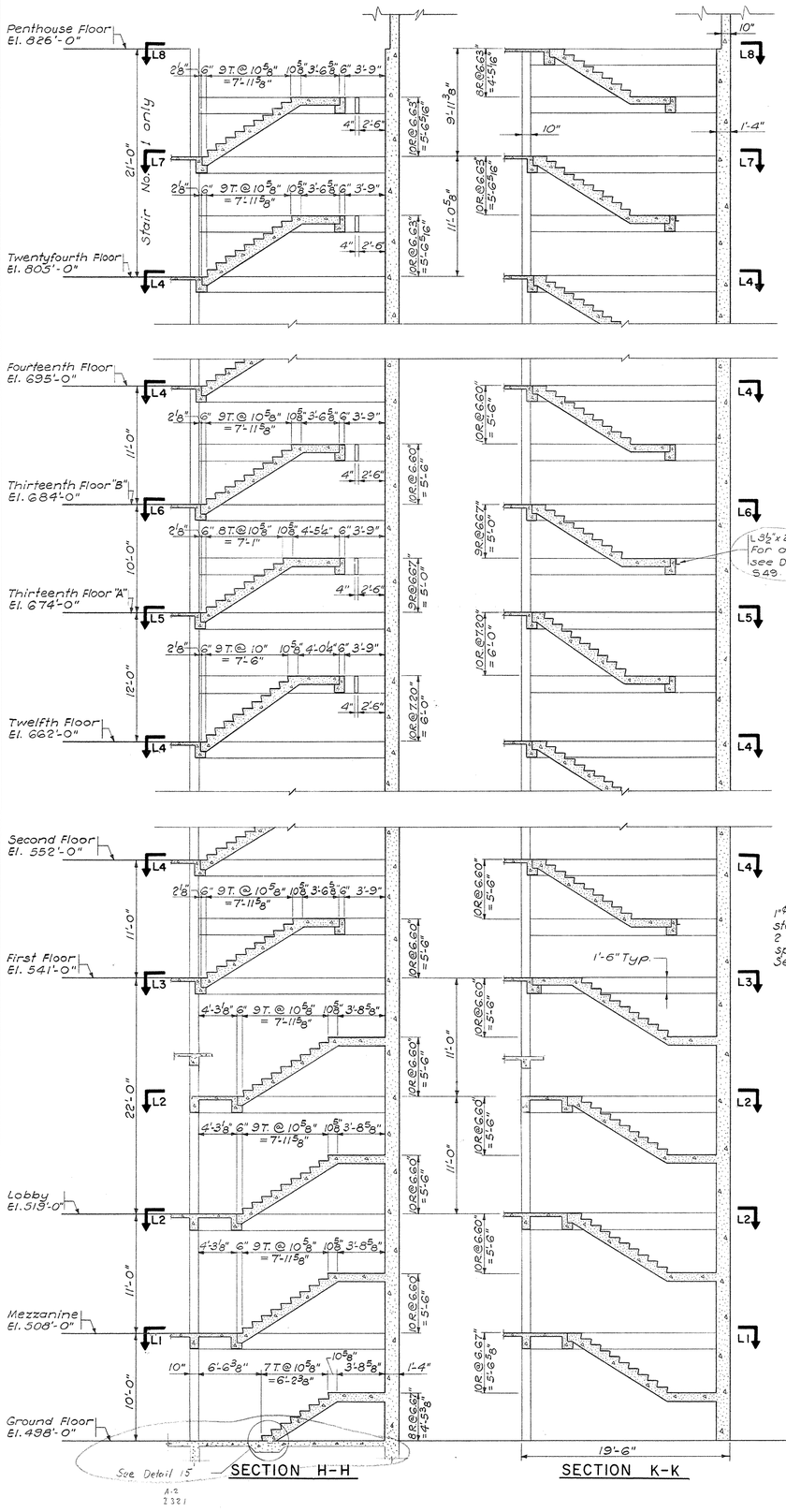

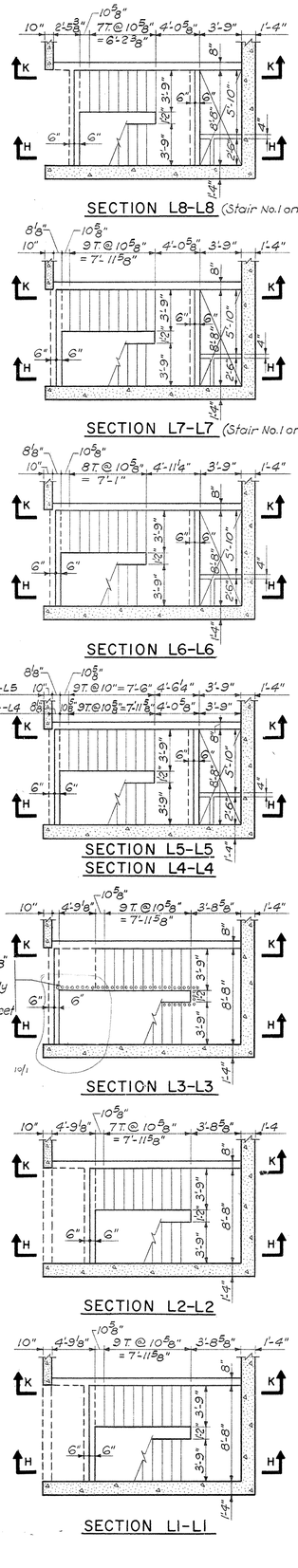

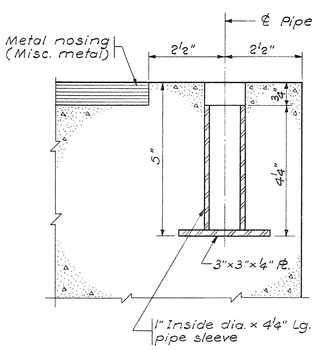

RAILING INSERTS
Half Scale

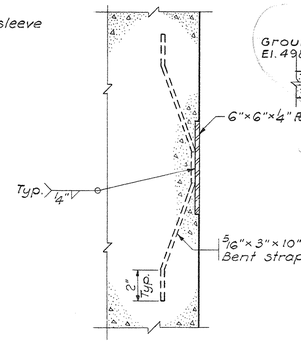

ANCHORAGE AT CONCRETE WALL
Scale: 3" = 1'-0"

DETAIL 15
Scale: 1" = 1'-0"

A-2 I 310

HANDRAIL DETAILS

For locations see architectural dwgs.

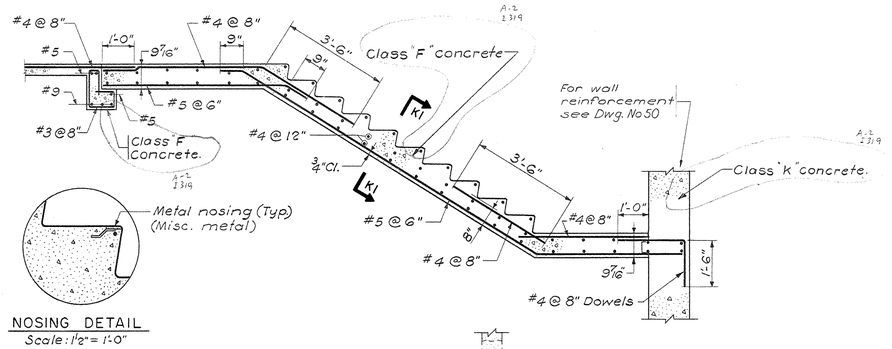

NOSING DETAIL
Scale: 1½" = 1'-0"

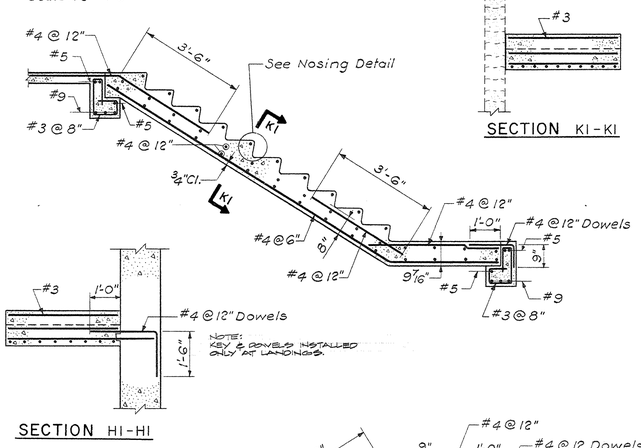

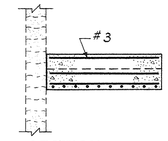

SECTION K1-K1

SECTION H1-H1

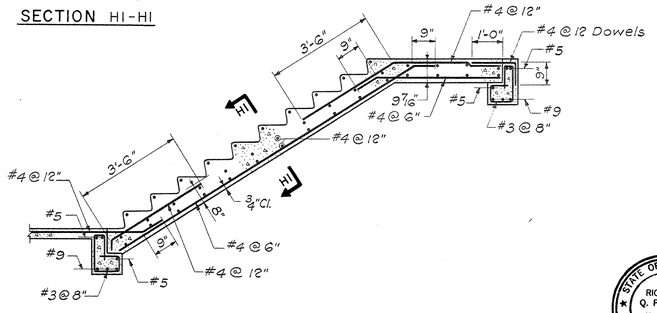

TYPICAL STAIR REINFORCING DETAILS
Scale: ½" = 1'-0"

NOTES:

1. For location of stair No. 1 and stair No. 2, see floor plans.
2. For general notes and typical details, see Dwg. No. S57.
3. All stair slabs are 8" thick unless otherwise noted.

DETAILS OF STAIR NO. 2 — DETAILS OF STAIR NO. 1 OPPOSITE HAND AND AS NOTED
Scale: 3/16" = 1'-0"

OCT. 13, 1966
TRACINGS CONFORMED TO ADDENDA 11-1-67

CAPITAL PLAZA OFFICE BUILDING

FRANKFORT, KENTUCKY

DRAWN BY A.C.	DETAILS OF STAIRS NO. 1 & 2	DATE 15 MAY 67
TRACED BY	ARCHITECT EDWARD DURELL STONE 7 EAST 67TH STREET NEW YORK N.Y.	SCALE AS NOTED
CHECKED BY R.Q.	ASSOCIATE ARCHITECTS & ENGINEERS LEE POTTER SMITH & ASSOCIATES 314 WILKINSON FRANKFORT, KENTUCKY	COMM. NO. 50066
SECTOR NO. C 2	COMMONWEALTH OF KENTUCKY DEPARTMENT OF FINANCE — ENGINEERING STAFF FRANKFORT, KENTUCKY	DRAWING NO. S 55 OF 71

STATE OF KENTUCKY — RICHARD Q. PRAEGER No. 6175 — REGISTERED PROFESSIONAL ENGINEER

PRAEGER-KAVANAGH-WATERBURY
STRUCTURAL-ENGINEERS
R.Q. PRAEGER, Partner

APPROVED BY	ARCHITECT	DATE
APPROVED BY		DATE
APPROVED BY	OWNER	DATE

CPA-131

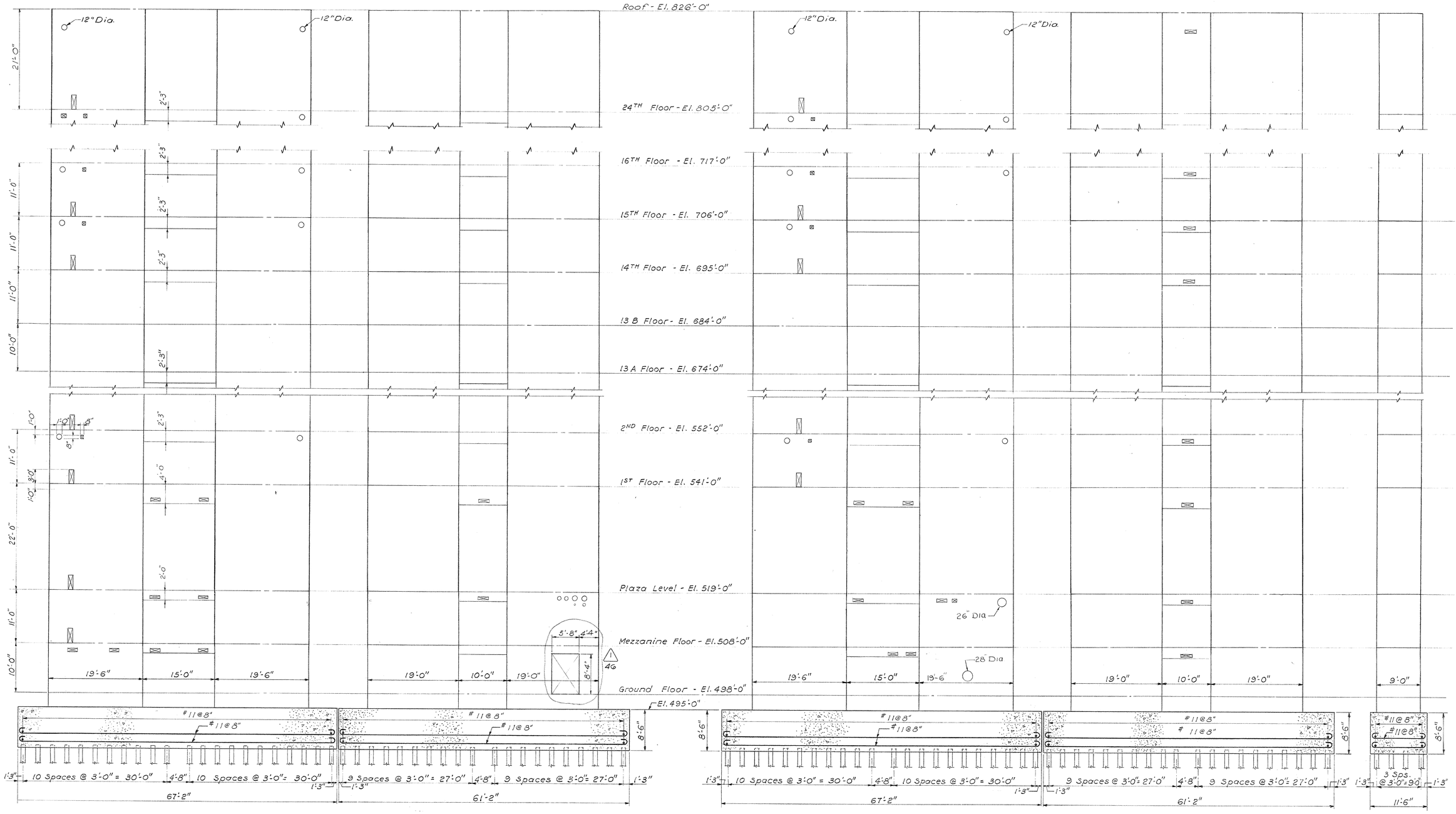

SECTION A-A

SECTION C-C

SECTION B-B

SECTION D-D

SECTION E-E

NOTES

1. For typical wall reinforcement, see Dwg. No. S50.
2. For additional reinforcement at beam and wall openings, see Dwg. No. S49 and S57.
3. For pile layout, see Dwg. No. S5.
4. All piles are 10BP42 unless otherwise noted.

Change Proposal No. 1
Circled area noted thus △ Item No.

STATE OF KENTUCKY
RICHARD O. PRAEGER
No. 6175
REGISTERED PROFESSIONAL ENGINEER

PRAEGER-KAVANAGH-WATERBURY
STRUCTURAL-ENGINEERS
R. O. PRAEGER, Partner

CAPITAL PLAZA OFFICE BUILDING

FRANKFORT, KENTUCKY

DRAWN BY	WALL ELEVATIONS	DATE 15 MAY 67
TRACED BY	ARCHITECT EDWARD DURELL STONE, 7 EAST 67TH STREET, NEW YORK N. Y.	SCALE 8" = 1'-0"
CHECKED BY	ASSOCIATE ARCHITECTS & ENGINEERS LEE POTTER SMITH & ASSOCIATES, 314 WILKINSON, FRANKFORT, KENTUCKY	COMM. NO. 50066
SECTOR NO. C 2	COMMONWEALTH OF KENTUCKY, DEPARTMENT OF FINANCE — ENGINEERING STAFF, FRANKFORT, KENTUCKY	DRAWING NO. S 56 OF 71

APPROVED BY _____ ARCHITECT DATE _____

APPROVED BY _____ AGENCY DATE _____

APPROVED BY _____ OWNER DATE _____

CPA-132

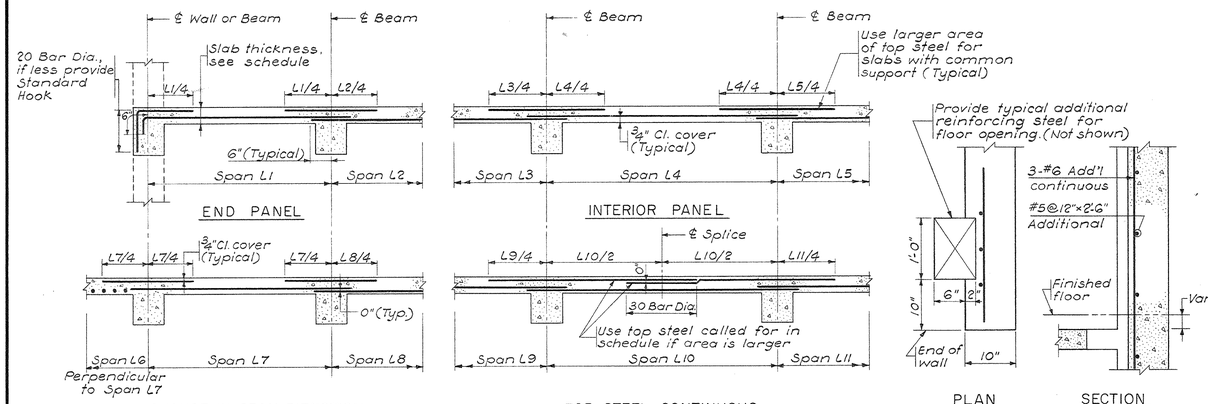

TYPICAL SLAB REINFORCING DETAILS

Temperature steel not shown — See General Notes

N.T.S.

TYPICAL DETAIL OF FLOOR OPENING AND WALL RECESS FOR MAIL CHUTE-ALL FLOORS

Standard slab and wall reinforcing steel not shown.

Scale: 1"=1'-0"

CLASSES OF CONCRETE

(N.S. DENOTES "NOT SPECIFIED")

Class	Control Cyl. Strength 7 day	Control Cyl. Strength 28 day	Cement Type	Cement Color	Coarse Aggregate Type	Coarse Aggregate Color	Coarse Aggregate Max. Size	Fine Aggregate Type	Fine Aggregate Color	Air ± 1½%	Type Concrete	Locations (See Sections for Constr. Jts. Betw. Pours)
A	NS	5000	I	Gray	Lightweight	NS	1/2"	15% Sand 85% Lightweight	NS	7%	Precast	Ceiling Units
B	NS	5000	I	White	Crushed Stone	NS	1/2"	Sand	White	7%	Precast	Mullions
F	NS	4000	I	Gray	Lightweight	NS	3/4"	15% Sand 85% Lightweight	NS	6%	Cast-in-Place	Mezzanine and Plaza Level Floor Framing, Stairs, Roof and Penthouse Framing, Core Framing*
G	4000	NS	III	Gray	Lightweight	NS	3/4"	15% Sand 85% Lightweight	NS	6%	Cast-in-Place	1st Floor through 24th Floor Framing
H	4000	NS	III	White	Crushed Stone	NS	3/4"	Sand	White	6%	Cast-in-Place	All Exposed Exterior Conc. Visible from Plaza Including Ext. Cols., Ext. Walls, which are Part of Pre-cast Floor Pours.
K	NS	4000	I	Gray	Crushed Stone	NS	3/4"	Sand	NS	6%	Cast-in-Place	Interior Walls* and Interior Columns.
L	NS	3000	I	Gray	Lightweight	NS	1/2"	Sand	NS	7%	Cast-in-Place	Concrete Floors Over Permanent Steel Centering, Concrete Topping
P	NS	3000	I	Gray	Crushed Stone	NS	3/4"	Sand	NS	6%	Cast-in-Place	Slabs on Grade, Pedestals, Foundations, Walls below Grade, Pits, Trenches
J	NS	4000	I	White	Crushed Stone	NS	3/4"	Sand	White	6%	Cast-in-Place	Parapet Walls, Arrival Court Walls, Columns not part of precast floor pours

*See Note No. 1 in Precast Conc. Floor Construction Sequence.

GENERAL NOTES

1. Design conforms to the applicable portions of the following Standards:
   - Concrete - American Concrete Institute "Standard Building Code Requirements for Reinforced Concrete", (ACI 318-63). Ultimate strength procedures used throughout.
   - Steel - Am. Inst. of Steel Construction, "Specification for Design, Fabrication and Erection of Structural Steel for Buildings", Part 1, April 17, 1963.
   - Building Code - "The National Building Code", recommended by the National Board of Fire Underwriters, 1967.
   - Welding - "Code for Welding in Building Construction", American Welding Society, AWS D1.0-66. - "Recommended Practices for Welding Reinforcing Steel, Metal Inserts and Connections in Reinforced Concrete Construction", American Welding Society, AWS D12.1-61.
2. Reinforcing bar steel for #3 and #4 bars shall conform to ASTM A15-65, Intermediate Grade, and to ASTM A305-65. All other reinforcing bar steel shall conform to ASTM A432-65. All welded fabric reinforcement shall conform to ASTM A185-64.
3. Structural steel shall conform to ASTM A36-66 T, except where otherwise noted.
4. Minimum slab reinforcing bar steel for concrete slabs not scheduled shall consist of #3 @ 12 ea. way, top and bottom, continuous.
5. Minimum beam reinforcing bar steel for concrete beams not scheduled shall consist of 2 #5 ea. bars top and bottom continuous, and #3 ties @ 12" o/c.
6. Minimum wall reinforcing bar steel for concrete walls not detailed shall consist of #5 @ 12 ea. way each face.
7. Unless otherwise shown, clear concrete cover to reinforcing bar steel shall be 1-1/2" for beams and columns, 3/4" for slabs and joists, 3/4" for exposed walls, 3" for concrete placed directly on the ground, and 2" for formed concrete surface exposed to the ground.
8. Unless otherwise shown, all splices in reinforcing bar steel shall be 30 bar diameters.
9. Building walls retaining earth shall be adequately braced top and bottom until floor systems and slabs on grade bracing these walls have been constructed and have obtained sufficient strength.
10. Dovetail slots shall be installed in all concrete surfaces facing or abutting masonry walls. Reglets in concrete surfaces shall be installed where called for on Architectural Drawings.
11. All embedded items shown on Architectural, Mechanical and Electrical Drawings shall be installed as indicated.
12. See Mechanical and Electrical Drawings for sleeves and conduits placed in the concrete work.
13. Provide #3 @ 12 bottom temperature steel in all roof and floor slabs perpendicular to slab span. Omit for two-way slabs.
14. See Architectural, Mechanical and Electrical Drawings for concrete equipment pads, inertia blocks, etc.
15. Beam schedules have been detailed for non-slip formed core walls. See details for modifications if core walls are slip formed.
16. Construction joints in exterior exposed concrete surfaces other than those shown will not be permitted.
17. All structural steel embedded items indicated are furnished under the Structural Steel Section of the Specifications, except where noted as furnished under the Miscellaneous Metal Section, and both are placed under the Concrete Section of the Specifications. See Architectural Drawings for additional miscellaneous metal embedded items.
18. Minimum slab thickness not otherwise shown on Plans is 4".
19. Piles shall be cut off 6" above bottom of footings.
20. All dowels into footings, walls, beams, etc., shall be tied in place prior to placing concrete.
21. Bottom Elevations of Footings noted thus: [ ].
22. Datum: U.S.C.& G.S. Mean Sea Level.
23. Air Dry weights of Classes "F" and "G" concrete and of Class "L" concrete determined in accordance with American Concrete Institute Standard 301-66, Section 303 (b) shall not exceed 105 pcf and 115 pcf respectively.

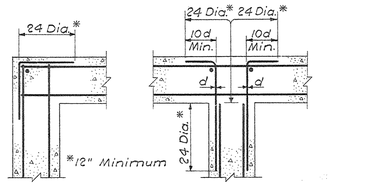

TYPICAL WALL REINFORCING DETAILS

See sections for steel sizes, vertical steel not shown.

N.T.S.

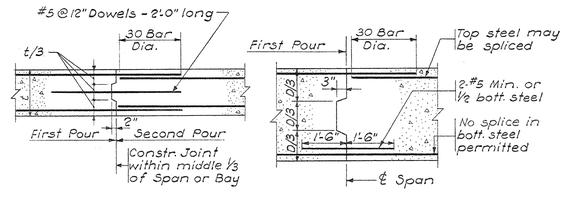

TYPICAL CONSTRUCTION JOINTS

Except for Joints at slip-formed walls

N.T.S.

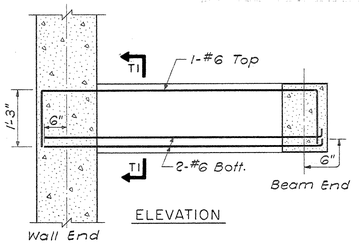

TYPICAL REINFORCING STEEL 4"x18" BEAMS

Scale: ¾"=1'-0"

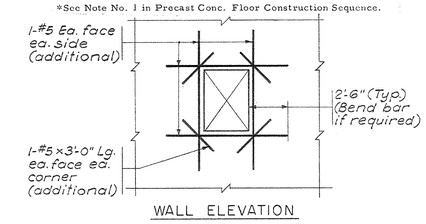

TYPICAL ADD'L REINFORCING STEEL FOR WALL OPENINGS NOT OTHERWISE DETAILED

N.T.S.

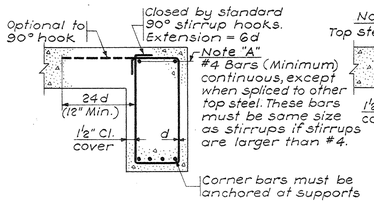

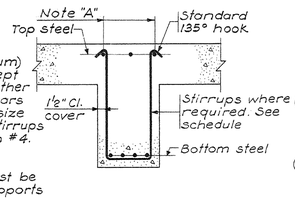

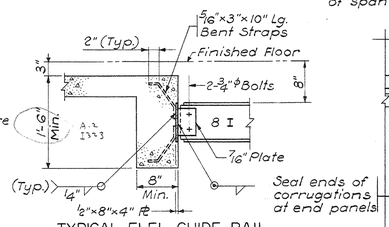

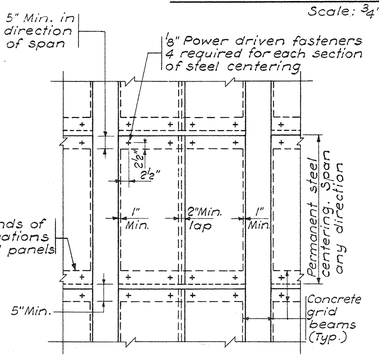

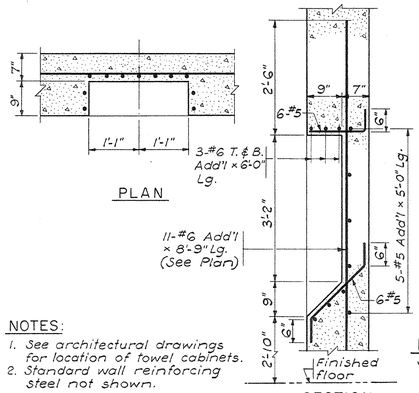

NOTES:

1. See architectural drawings for location of towel cabinets.
2. Standard wall reinforcing steel not shown.

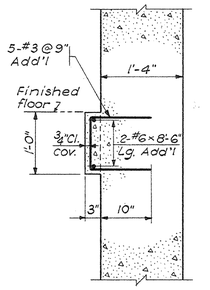

TYPICAL DETAIL OF LEDGE IN WALL FOR SUPPORT OF FLUE - AT ALL FLOORS

Standard wall reinforcing steel not shown

N.T.S.

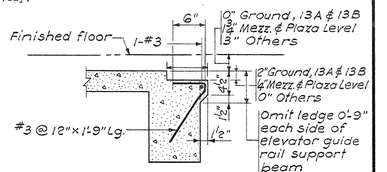

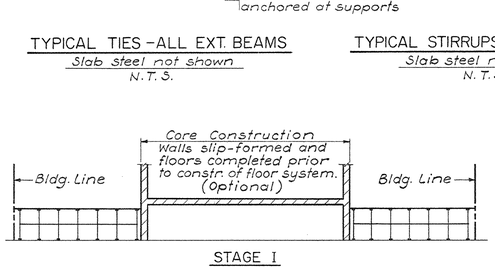

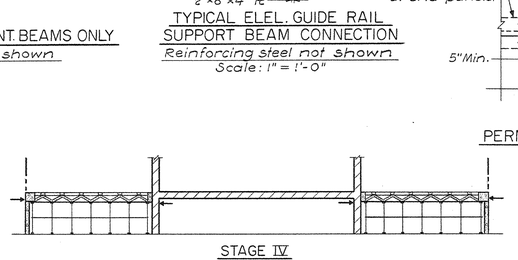

NOTES:

1. If concrete for core wall and floor system are placed together with Stage III, Type III Portland Cement will be required to be consistent with Stage III Concrete.
2. Shoring for Construction Loads is required 4 floors below floor under construction. (Not applicable to Stage V).
3. Grouted joints between Precast Ceiling Unit in Stage II and Concrete for Stage III must obtain adequate strength before Post-tensioning.

OPTIONAL PRECAST CONCRETE FLOOR CONSTRUCTION SEQUENCE

N.T.S.

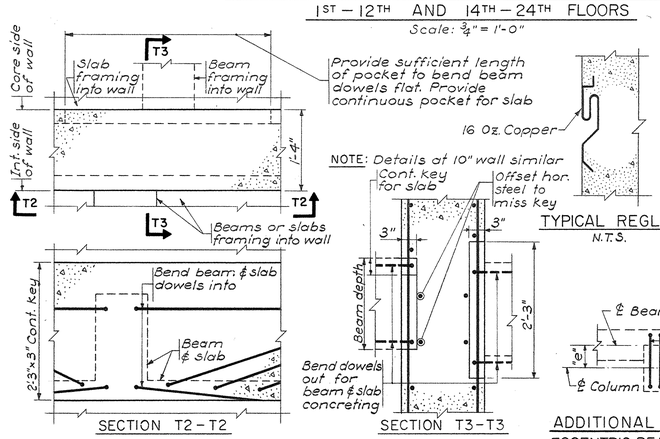

TYPICAL DETAIL OF TOWEL CABINET RECESS IN ALL TOILETS 1ST - 12TH AND 14TH - 24TH FLOORS

Scale: ¾"=1'-0"

TYPICAL CORE WALL SLIP FORM DETAILS

Scale: 1"=1'-0"

TYPICAL REGLET

N.T.S.

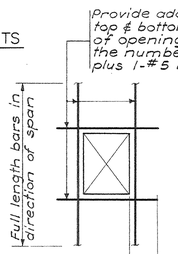

TYPICAL ADD'L REINFORCING STEEL FOR FLOOR OPENINGS

N.T.S.

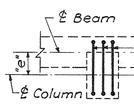

ADDITIONAL STEEL FOR ECCENTRIC BEAM TO COLUMN CONNECTION - TYPICAL

N.T.S.

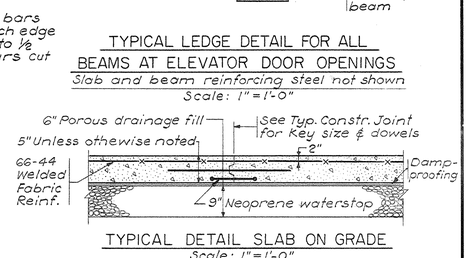

TYPICAL LEDGE DETAIL FOR ALL BEAMS AT ELEVATOR DOOR OPENINGS

Slab and beam reinforcing steel not shown

Scale: 1"=1'-0"

TYPICAL DETAIL SLAB ON GRADE

Scale: 1"=1'-0"

TRACINGS CONFORMED TO ADDENDA 11-1-67

PRAEGER-KAVANAGH-WATERBURY
STRUCTURAL-ENGINEERS
R.D. PRAEGER, Partner

STATE OF KENTUCKY * RICHARD D. PRAEGER No. 6175 REGISTERED PROFESSIONAL ENGINEER *

CAPITAL PLAZA OFFICE BUILDING

FRANKFORT, KENTUCKY

DRAWN BY A.C.	GENERAL NOTES & TYPICAL DETAILS	DATE
TRACED BY		SCALE
CHECKED BY J.E.	ARCHITECT EDWARD DURELL STONE 7 EAST 67TH STREET NEW YORK N.Y.	COMM. NO.
SECTOR NO. C 2	ASSOCIATE ARCHITECTS & ENGINEERS LEE POTTER SMITH & ASSOCIATES 314 WILKINSON FRANKFORT, KENTUCKY	DRAWING NO. S 67
CPA-15	COMMONWEALTH OF KENTUCKY DEPARTMENT OF FINANCE - ENGINEERING STAFF FRANKFORT, KENTUCKY	OF 71

APPROVED BY ARCHITECT — DATE

APPROVED BY AGENCY HEAD — DATE

APPROVED BY OWNER — DATE MAY 20th 1967

CPA 133

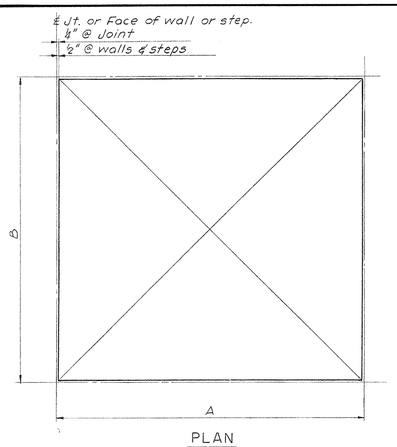

PLAN

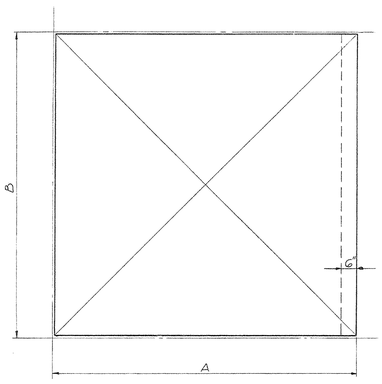

PLAN

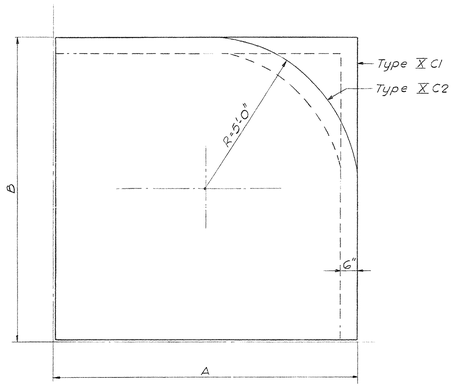

PLAN

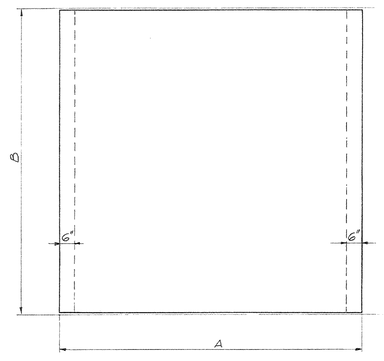

PLAN

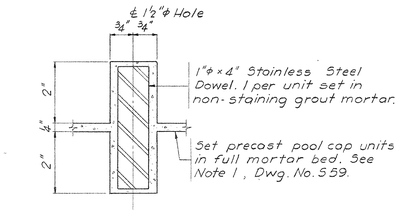

SETTING DETAIL
Scale: Half Size

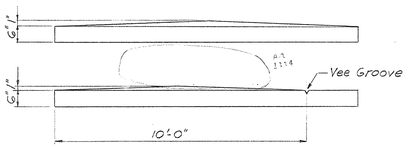

SECTIONS
TYPE X A

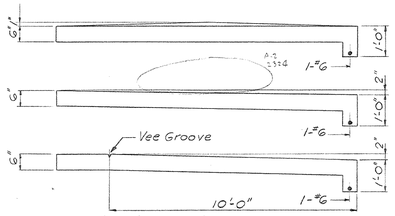

SECTIONS
TYPE X B

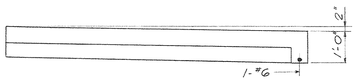

SECTION

SECTION

TYPE X C

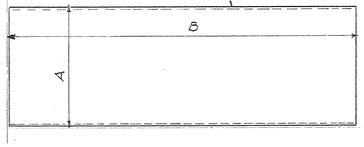

PLAN

TYPE X D

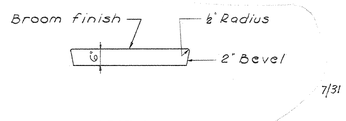

SECTION

7/31

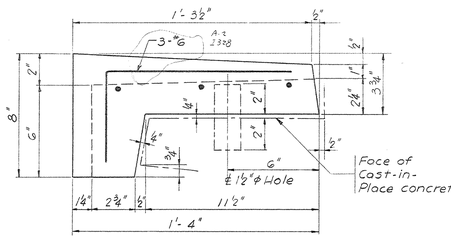

SECTION
Scale: 3"=1'-0"

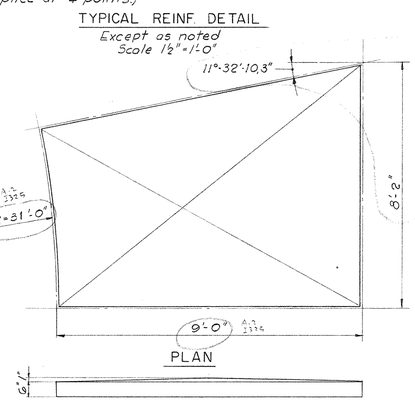

PLAN

TYPICAL REINF. DETAIL
Except as noted
Scale 1½"=1'-0"

SECTION
TYPE X E
TYPE X F' OPP. HAND
A-2 2326

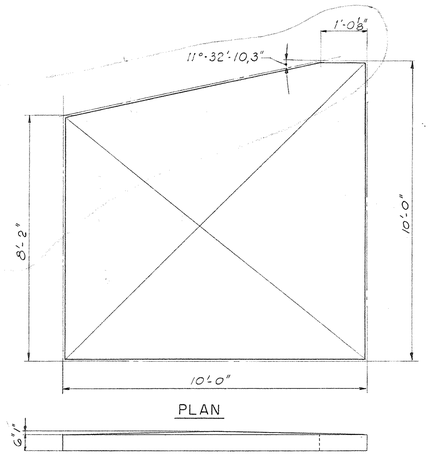

PLAN

SECTION
TYPE X F
TYPE X G' OPP. HAND
A-2 2326

TYPE X K

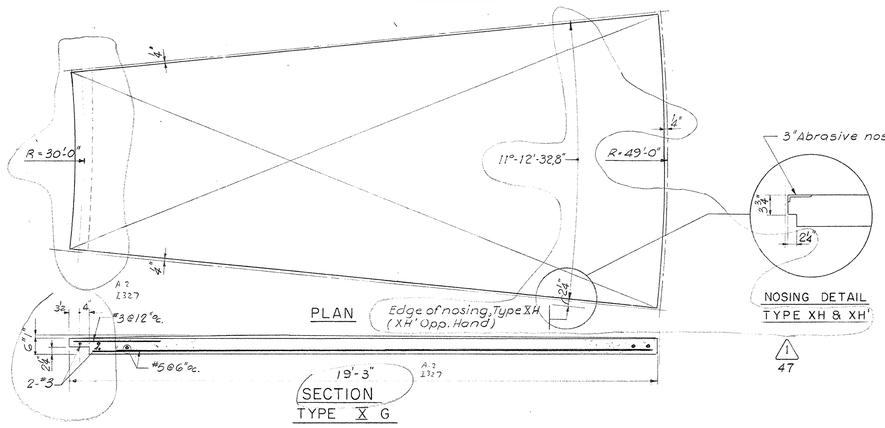

PLAN
Edge of nosing, Type XH (XH' Opp. Hand)

NOSING DETAIL
TYPE XH & XH'

SECTION
TYPE X G

NOTE:
See Arch'l Dwgs for railing locations and details of railing post connections through precast stair tread.

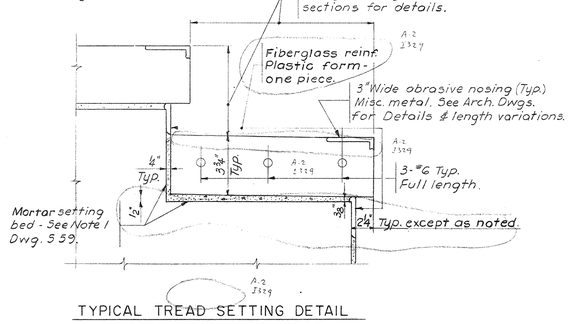

TYPICAL TREAD SETTING DETAIL

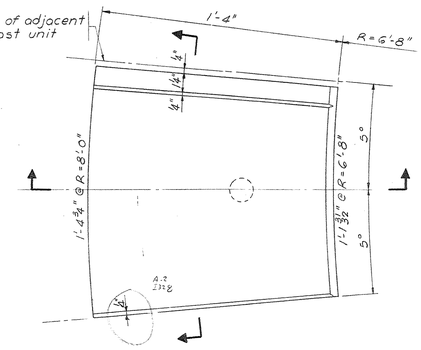

PLAN
Scale: 3"=1'-0"
PRECAST POOL CAP TYPE-VII

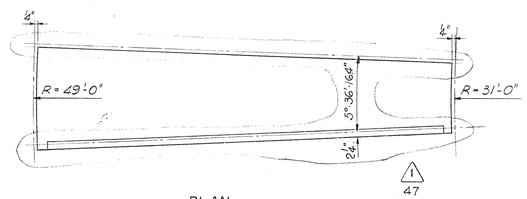

PLAN
STAIR TREADS TO FOUNTAIN SECTOR C-1
TYPE XJ (TYPE XJ' OPP. HAND)

PRECAST PLAZA PAVING PANELS - TYPE X
Scale: ½"=1'-0"

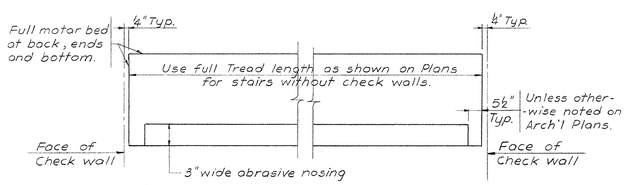

PLAN
TYPICAL STAIR TREADS

PRECAST STAIR TREADS - TYPE VI
Not to Scale

Change Proposal No. 1
All circled areas noted thus ⚠1
Item No.

July 21st '68
TRACINGS CONFORMED TO ADDENDA 11-1-67

STATE OF KENTUCKY
RICHARD Q. PRAEGER
No. 6175
REGISTERED PROFESSIONAL ENGINEER

AS-BUILT DRAWINGS
DATE: JAN 71
KITCHEN, CARTER & BLACKMAN, INC.

PRAEGER-KAVANAGH-WATERBURY
STRUCTURAL-ENGINEERS
R.Q. PRAEGER, Partner

CAPITAL PLAZA OFFICE BUILDING
FRANKFORT, KENTUCKY

DRAWN BY C.A.R.	PRECAST CONCRETE III	DATE 15 MAY 67
TRACED BY J.S.	ARCHITECT EDWARD DURELL STONE 7 EAST 67TH STREET NEW YORK N.Y.	SCALE AS NOTED
CHECKED BY J.S.	ASSOCIATE ARCHITECTS & ENGINEERS LEE POTTER SMITH & ASSOCIATES 314 WILKINSON FRANKFORT, KENTUCKY	COMM. NO. 50066
SECTOR NO. ALL BUT C2	COMMONWEALTH OF KENTUCKY DEPARTMENT OF FINANCE - ENGINEERING STAFF FRANKFORT, KENTUCKY	DRAWING NO. S 58 OF 71

APPROVED BY _____ ARCHITECT DATE _____
APPROVED BY _____ AGENCY HEAD DATE _____
APPROVED BY _____ OWNER DATE MAY 24 1967

CPA-134

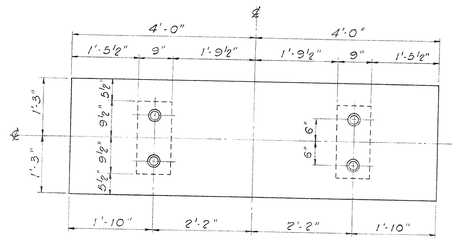

PLAN

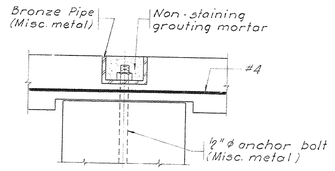

CONNECTION DETAIL
Scale: 3"=1'-0"

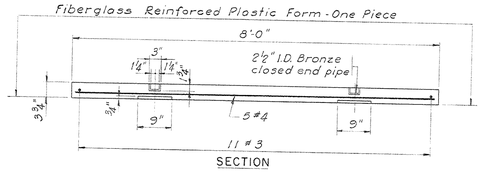

SECTION

SEAT
Scale: ¾"=1'-0"

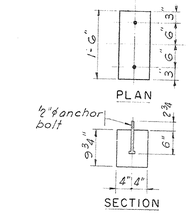

PEDESTAL
Scale: ¾"=1'-0"

PRECAST BENCH - TYPE IV B
See Architectural Drawings for location

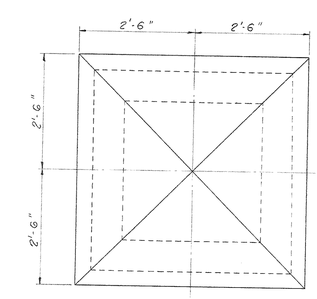

PLAN

SECTION

PRECAST BENCH - TYPE IV A
See Architectural Drawings for locations

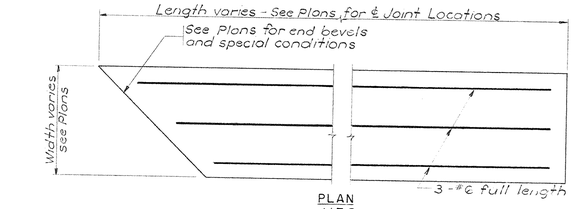

PLAN
N.T.S.

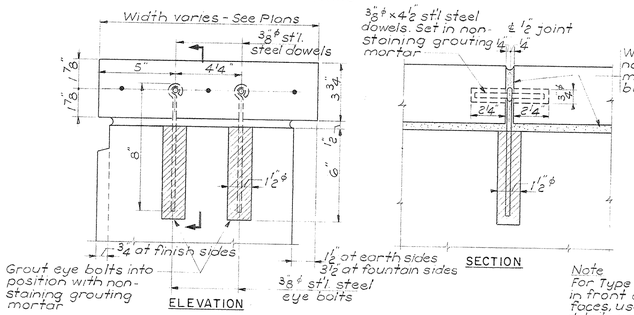

TYPICAL CONNECTION DETAILS

PRECAST COPINGS — TYPE V
Scale 3"=1'-0"

Note
For Type III A screens in front of column faces, use connection details on end faces rather than on back face similar to those shown for Types III B ℄ III C

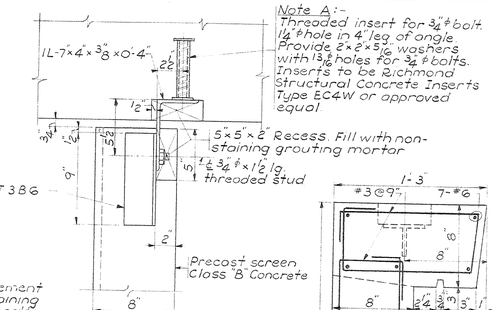

TOP CONNECTION DETAIL

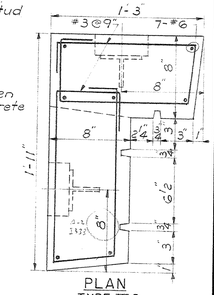

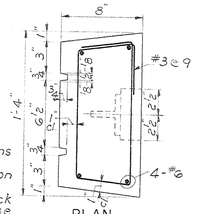

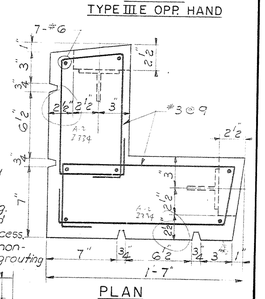

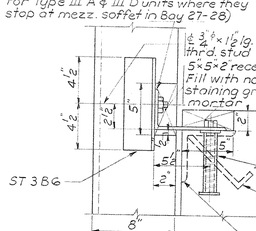

INTERMEDIATE FLOOR CONNECTION DETAIL

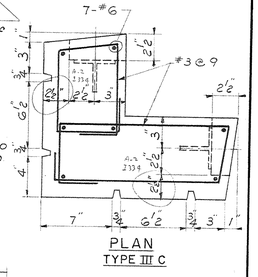

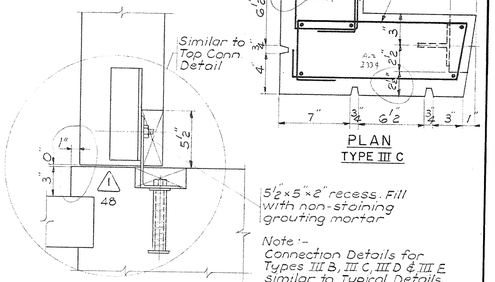

BOTTOM CONNECTION DETAIL
TYPICAL TYPE III A

PRECAST SCREENS — TYPE III
See Plans for locations of Precast Screens
Scale 2"=1'-0"

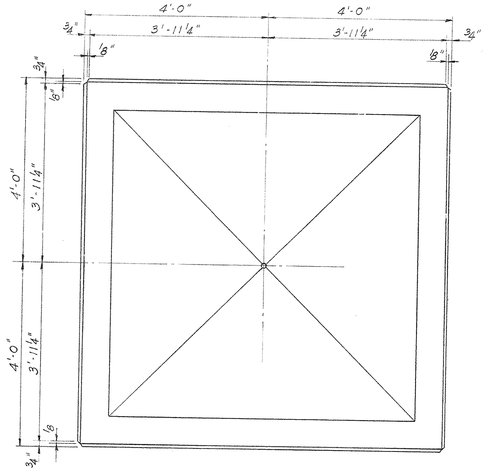

PLAN

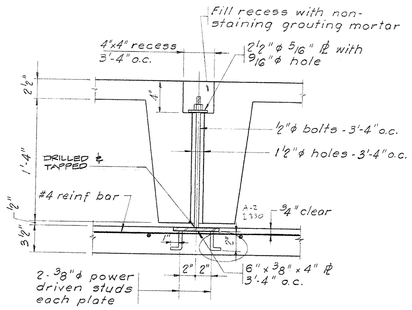

CONNECTION DETAIL
Scale: 1½"=1'-0"

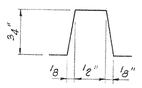

GROOVE DETAIL
Full Scale

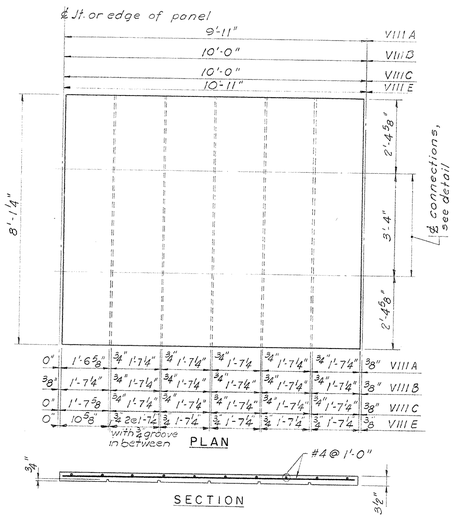

TYPES A, B, C & E
Scale: ½"=1'-0"

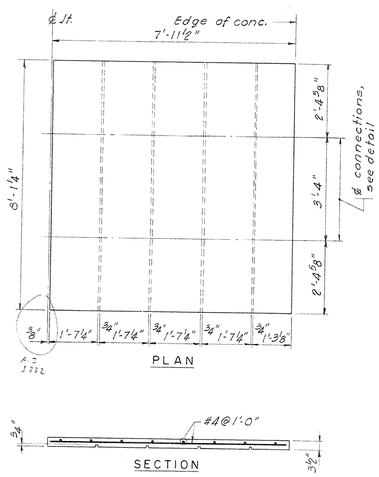

TYPE D
Scale: ½"=1'-0"

PRECAST CONCRETE SOFFITS - TYPE VIII

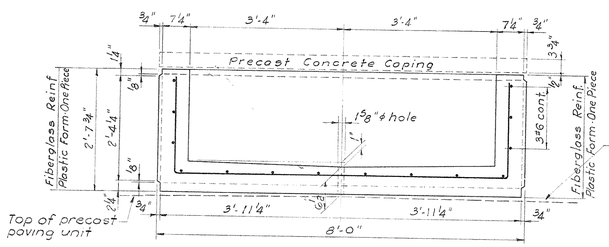
¾" 7¼" 3'-4" 3'-4" 7¼" ¾"
Precast Concrete Coping
1⅛"ϕ hole
1'
1'
1'

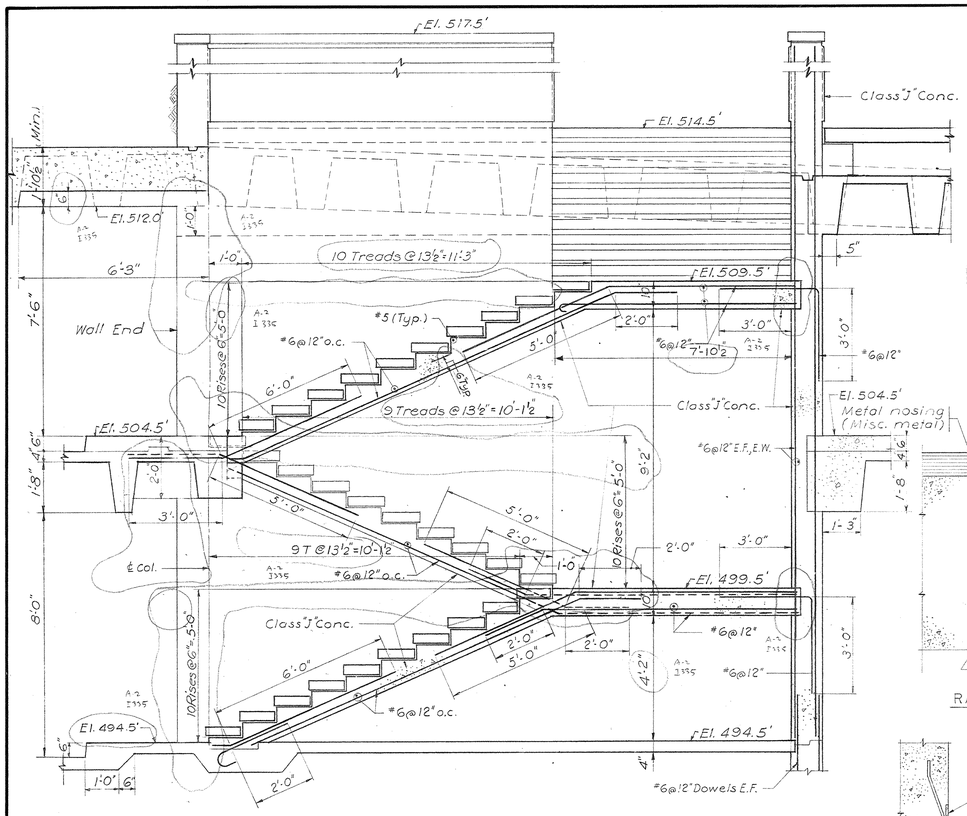

SECTION 29-29 (AS SHOWN)
SECTION 29-29 (SIMILAR)
Scale ½" = 1'-0"

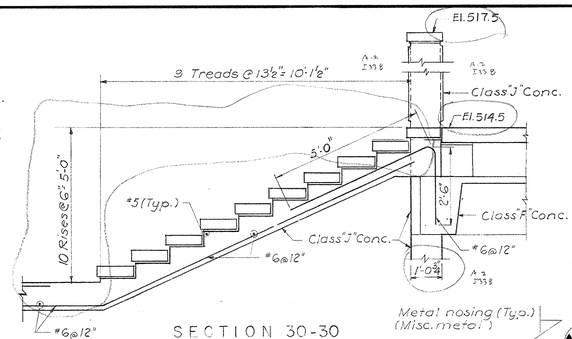

SECTION 30-30
Scale ½" = 1'-0"

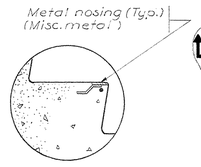

NOSING DETAIL
Scale 1½" = 1'-0"

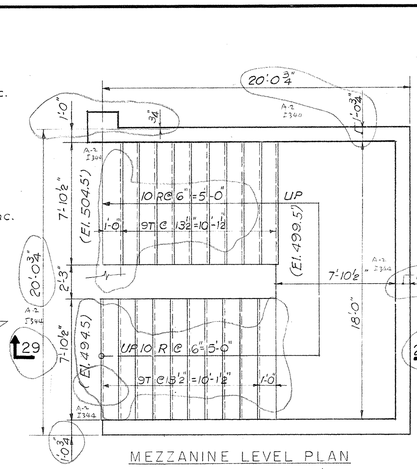

MEZZANINE LEVEL PLAN

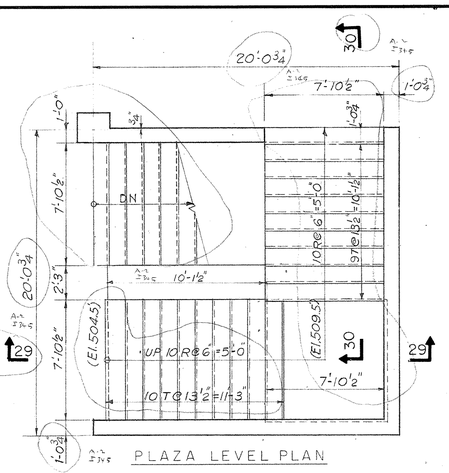

PLAZA LEVEL PLAN

STAIR S-2
STAIR-S-3 SIMILAR
Scale ¼" = 1'-0"

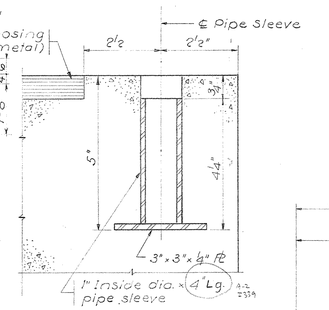

RAILING INSERTS
Half Scale

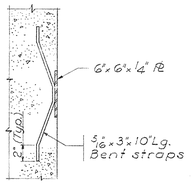

ANCHORAGE AT CONCRETE WALL
Scale 1½" = 1'-0"

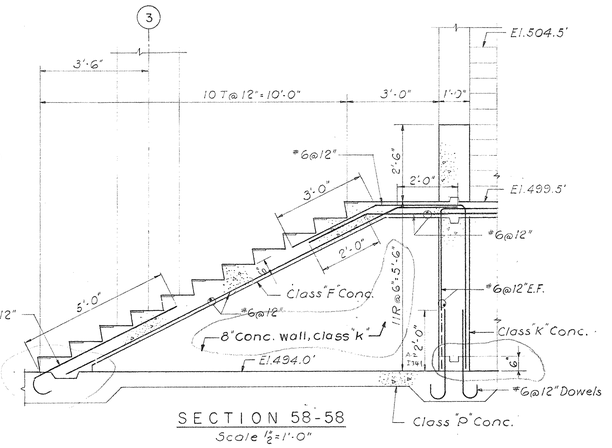

SECTION 58-58
Scale ½" = 1'-0"

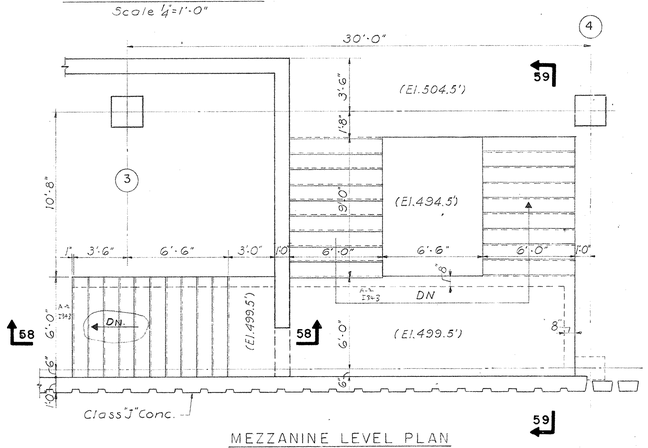

MEZZANINE LEVEL PLAN
STAIR S-1
Scale ¼" = 1'-0"

HANDRAIL DETAILS
For locations see architectural dwgs.

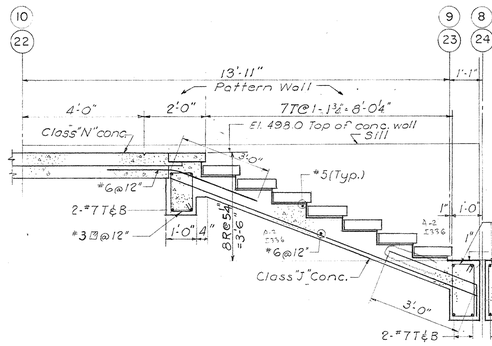

SECTION 60-60
Scale ½" = 1'-0"

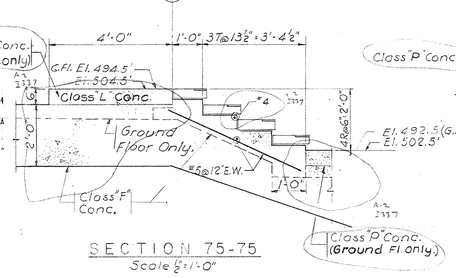

SECTION 75-75
Scale ½" = 1'-0"

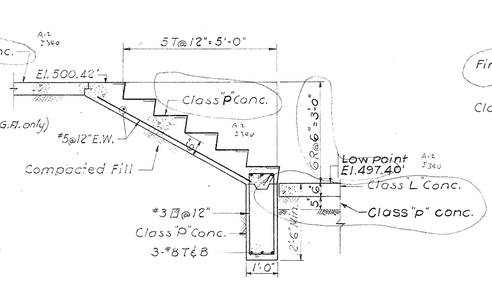

SECTION 76-76
Scale ½" = 1'-0"

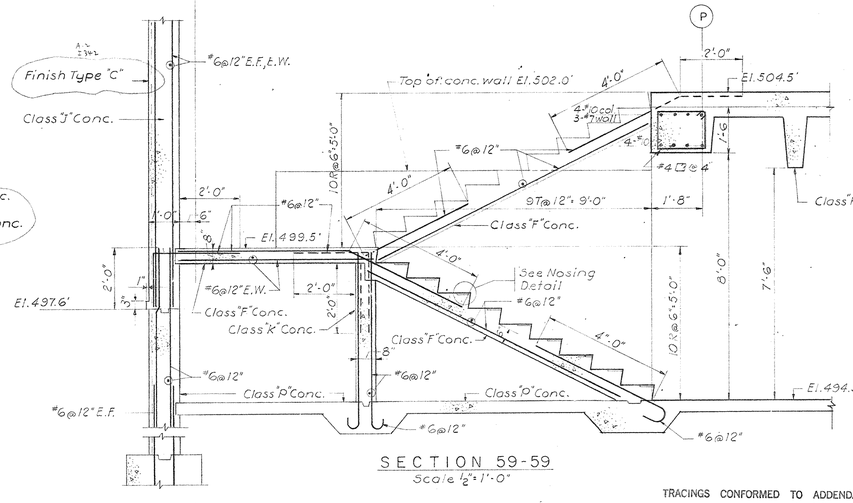

SECTION 59-59
Scale ½" = 1'-0"

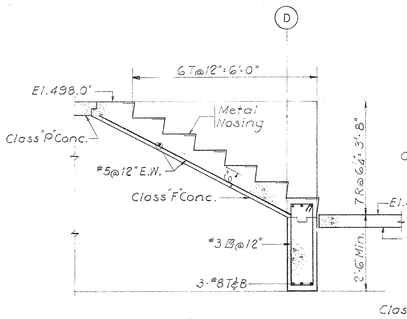

SECTION 78-78
Scale ½" = 1'-0"

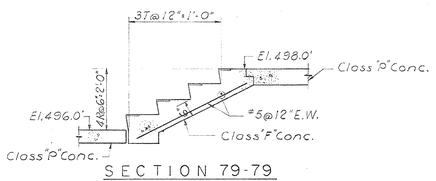

SECTION 79-79
Scale ½" = 1'-0"

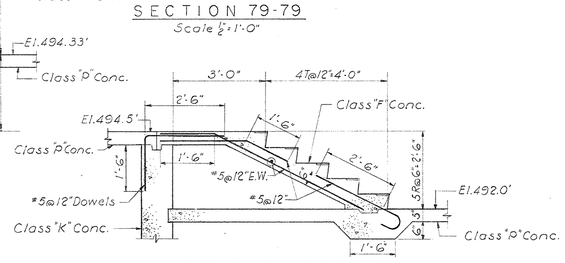

SECTION 77-77
Scale ½" = 1'-0"

TRACINGS CONFORMED TO ADDENDA 11-1-67

CAPITAL PLAZA OFFICE BUILDING

FRANKFORT, KENTUCKY

DRAWN BY	STAIRS 1	DATE 15 MAY 67
TRACED BY	ARCHITECT EDWARD DURELL STONE, 7 EAST 67TH STREET, NEW YORK N. Y.	SCALE AS NOTED
CHECKED BY -2-		COMM. NO. 50066
SECTOR NO. ALL BUT C2	ASSOCIATE ARCHITECTS & ENGINEERS LEE POTTER SMITH & ASSOCIATES, 314 WILKINSON, FRANKFORT, KENTUCKY	DRAWING NO. S 60
	COMMONWEALTH OF KENTUCKY, DEPARTMENT OF FINANCE – ENGINEERING STAFF, FRANKFORT, KENTUCKY	OF 71

STATE OF KENTUCKY — RICHARD Q. PRAEGER No. 6175 — REGISTERED PROFESSIONAL ENGINEER

AS-BUILT DRAWINGS

PRAEGER-KAVANAGH-WATERBURY
STRUCTURAL-ENGINEERS
R. Q. PRAEGER, Partner

APPROVED BY ARCHITECT — DATE
APPROVED BY SUPERINTENDENT — DATE
APPROVED BY OWNER — DATE

CPA-136

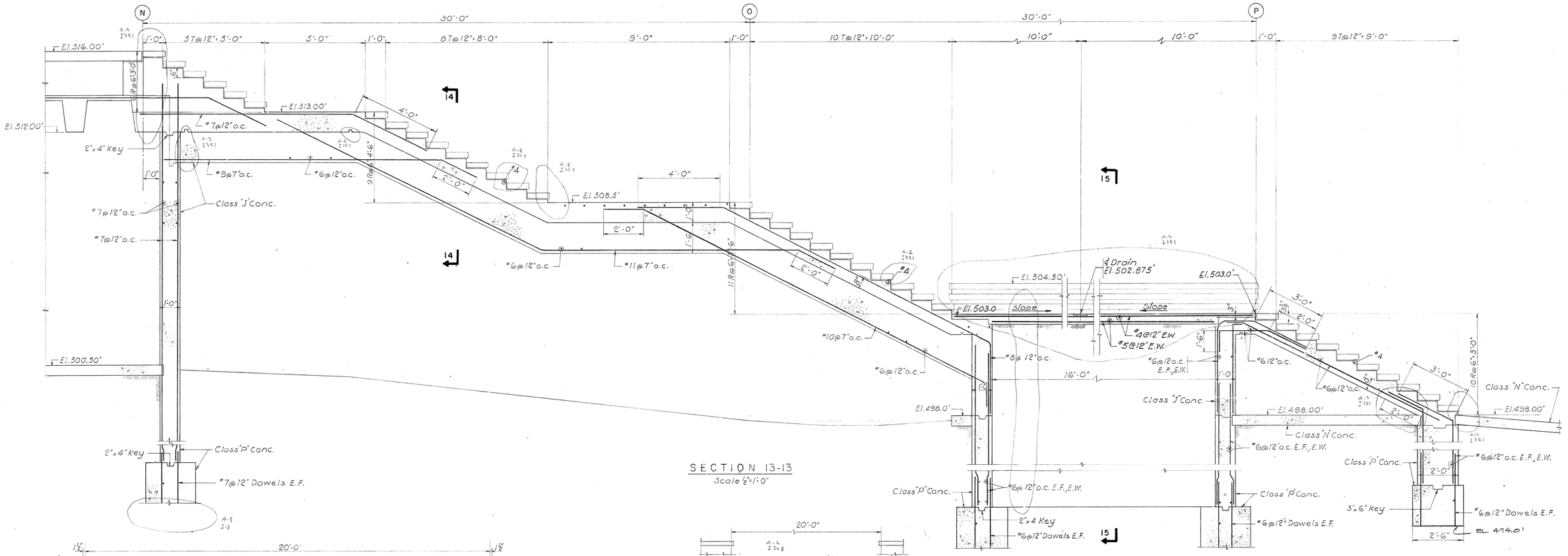

SECTION 13-13
Scale ½"=1'-0"

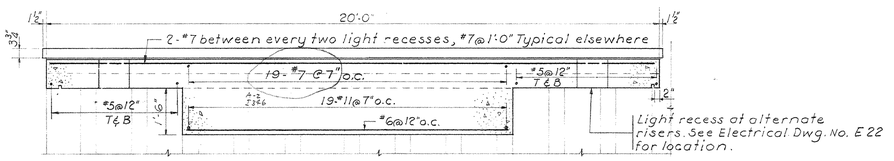

SECTION 14-14
Scale ½"=1'-0"

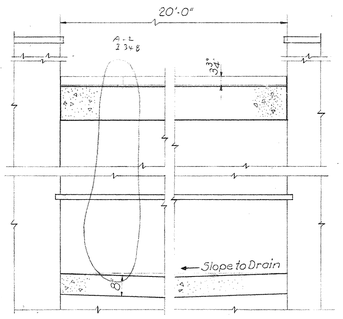

SECTION 56-56
Scale ½"=1'-0"

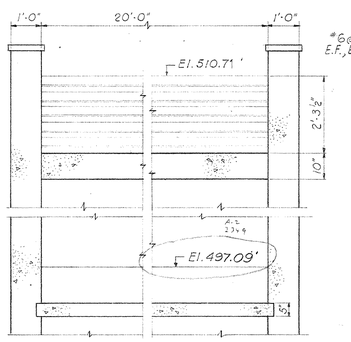

SECTION 55-55
Scale ½"=1'-0"

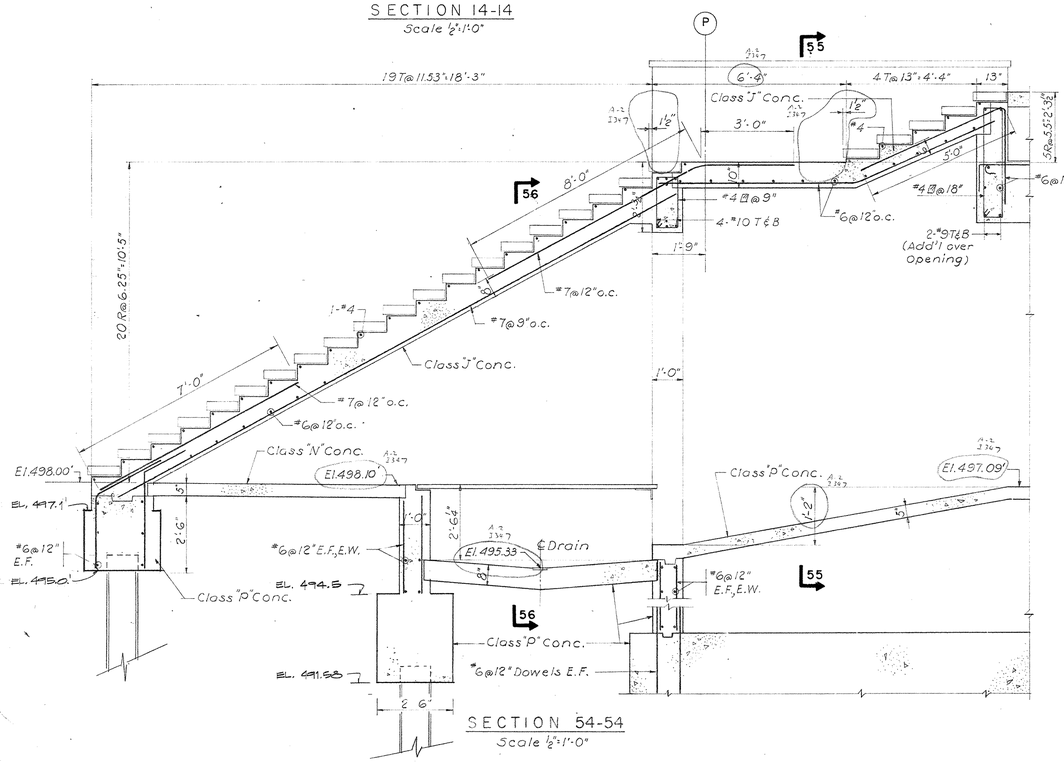

SECTION 54-54
Scale ½"=1'-0"

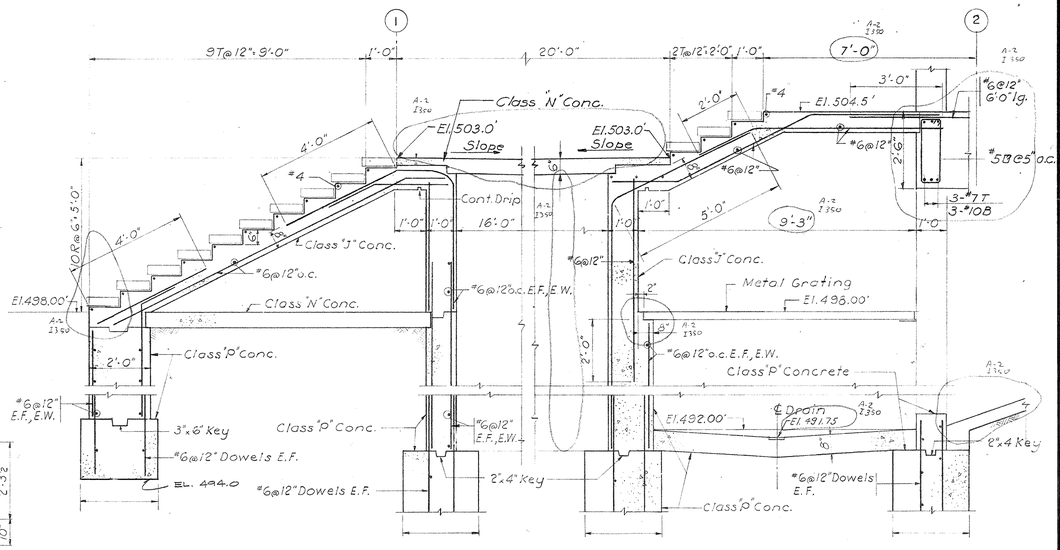

SECTION 15-15
Scale ½"=1'-0"

TRACINGS CONFORMED TO ADDENDA 11-1-67

CAPITAL PLAZA OFFICE BUILDING

FRANKFORT, KENTUCKY

DRAWN BY	STAIRS II	DATE 15 MAY 67
TRACED BY	ARCHITECT EDWARD DURELL STONE, 7 EAST 67TH STREET, NEW YORK N.Y.	SCALE AS NOTED
CHECKED BY JJ	ASSOCIATE ARCHITECTS & ENGINEERS LEE POTTER SMITH & ASSOCIATES, 314 WILKINSON, FRANKFORT, KENTUCKY	COMM. NO. 50066
SECTOR NO. ALL BUT C2	COMMONWEALTH OF KENTUCKY, DEPARTMENT OF FINANCE – ENGINEERING STAFF, FRANKFORT, KENTUCKY	DRAWING NO. S 61 OF 71

APPROVED BY _____ ARCHITECT DATE _____

APPROVED BY _____ AGENCY HEAD DATE _____

APPROVED BY W. F. McConnell OWNER DATE MAY 9th '67

STATE OF KENTUCKY — RICHARD Q. PRAEGER No. 6175 — REGISTERED PROFESSIONAL ENGINEER

AS-BUILT DRAWINGS JAN 73 RUSS, CANNON & PLACEMAN, INC.

PRAEGER-KAVANAGH-WATERBURY
STRUCTURAL-ENGINEERS
R. Q. PRAEGER, Partner

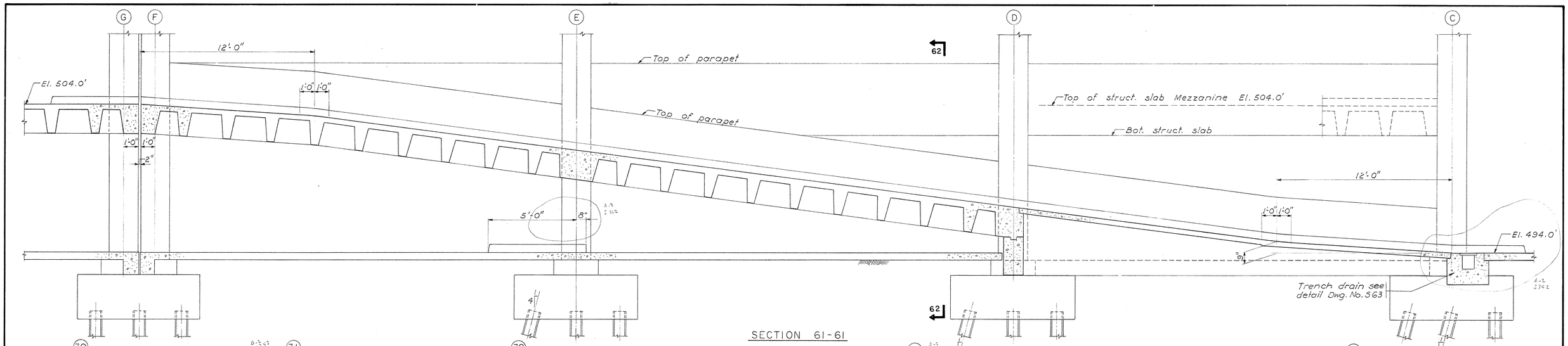

SECTION 61-61

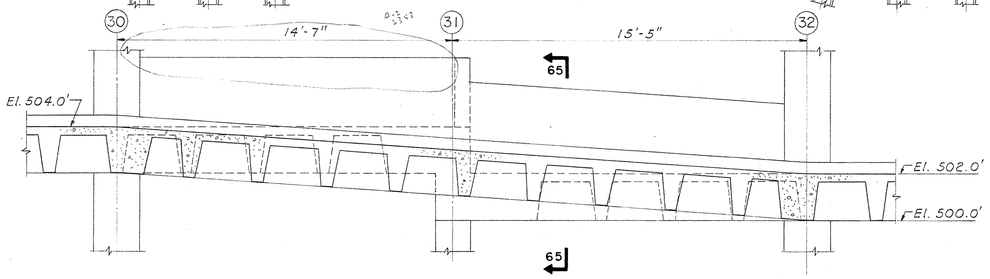

SECTION 63-63

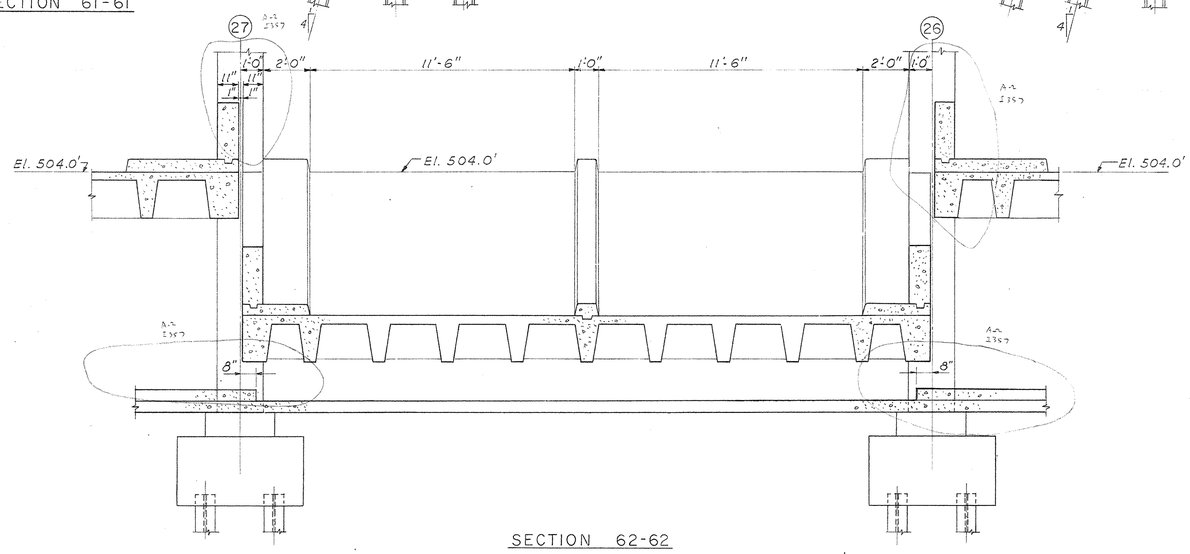

SECTION 62-62

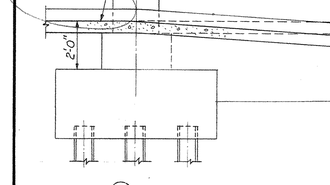

SECTION 64-64

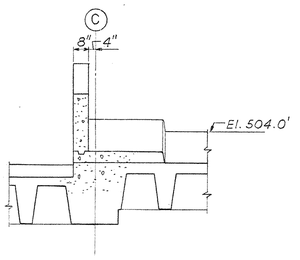

DI ONLY

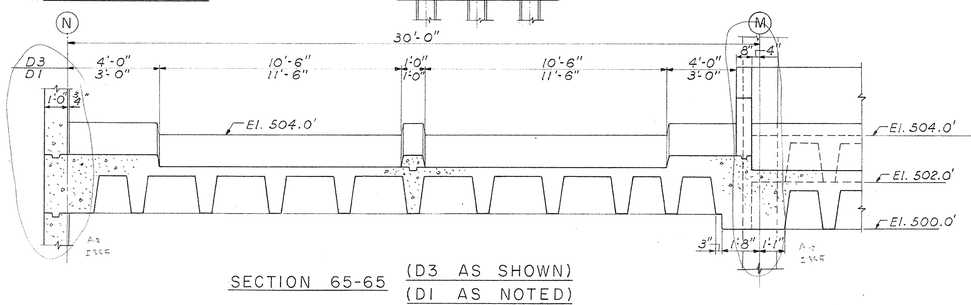

SECTION 65-65 (D3 AS SHOWN) (DI AS NOTED)

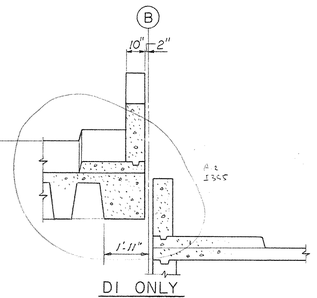

DI ONLY

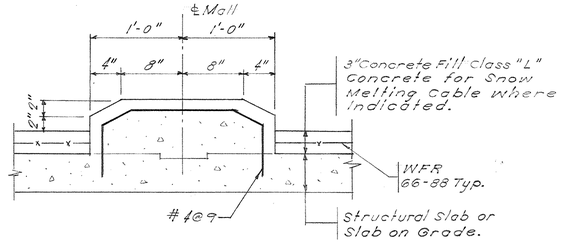

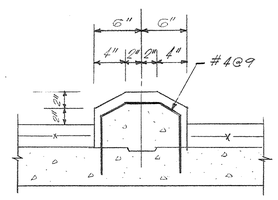

RAMPMALL DETAILS

N.T.S.

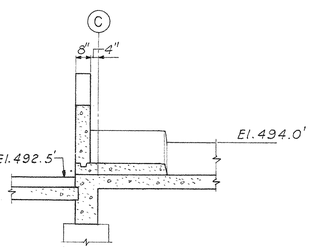

DI ONLY

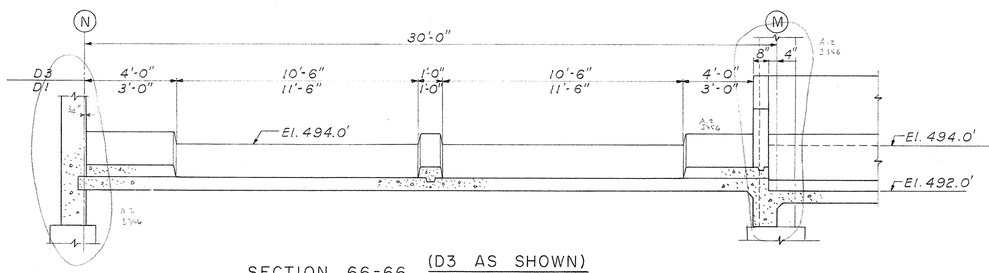

SECTION 66-66 (D3 AS SHOWN) (DI AS NOTED)

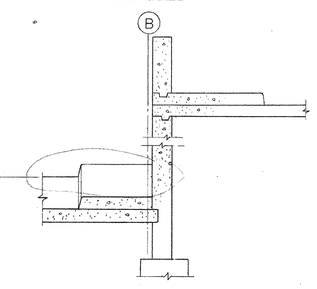

DI ONLY

TRACINGS CONFORMED TO ADDENDA 11-1-67

CAPITAL PLAZA OFFICE BUILDING

FRANKFORT, KENTUCKY

DRAWN BY	RAMPS I	DATE 15 MAY 67
TRACED BY	ARCHITECT EDWARD DURELL STONE, 7 EAST 67TH STREET NEW YORK N.Y.	SCALE 3/8" = 1'-0"
CHECKED BY J.E.		COMM. NO. 50066
SECTOR NO. ALL BUT C2	ASSOCIATE ARCHITECTS & ENGINEERS LEE POTTER SMITH & ASSOCIATES, 314 WILKINSON FRANKFORT, KENTUCKY	DRAWING NO. S 62
	COMMONWEALTH OF KENTUCKY DEPARTMENT OF FINANCE – ENGINEERING STAFF FRANKFORT, KENTUCKY	OF 71

STATE OF KENTUCKY — RICHARD D. PRAEGER No. 6175 REGISTERED PROFESSIONAL ENGINEER

PRAEGER-KAVANAGH-WATERBURY
STRUCTURAL-ENGINEERS
R.Q. PRAEGER, Partner

APPROVED BY _____ ARCHITECT DATE _____

APPROVED BY _____ AGENCY HEAD DATE _____

APPROVED BY _____ OWNER DATE _____

CPA-138

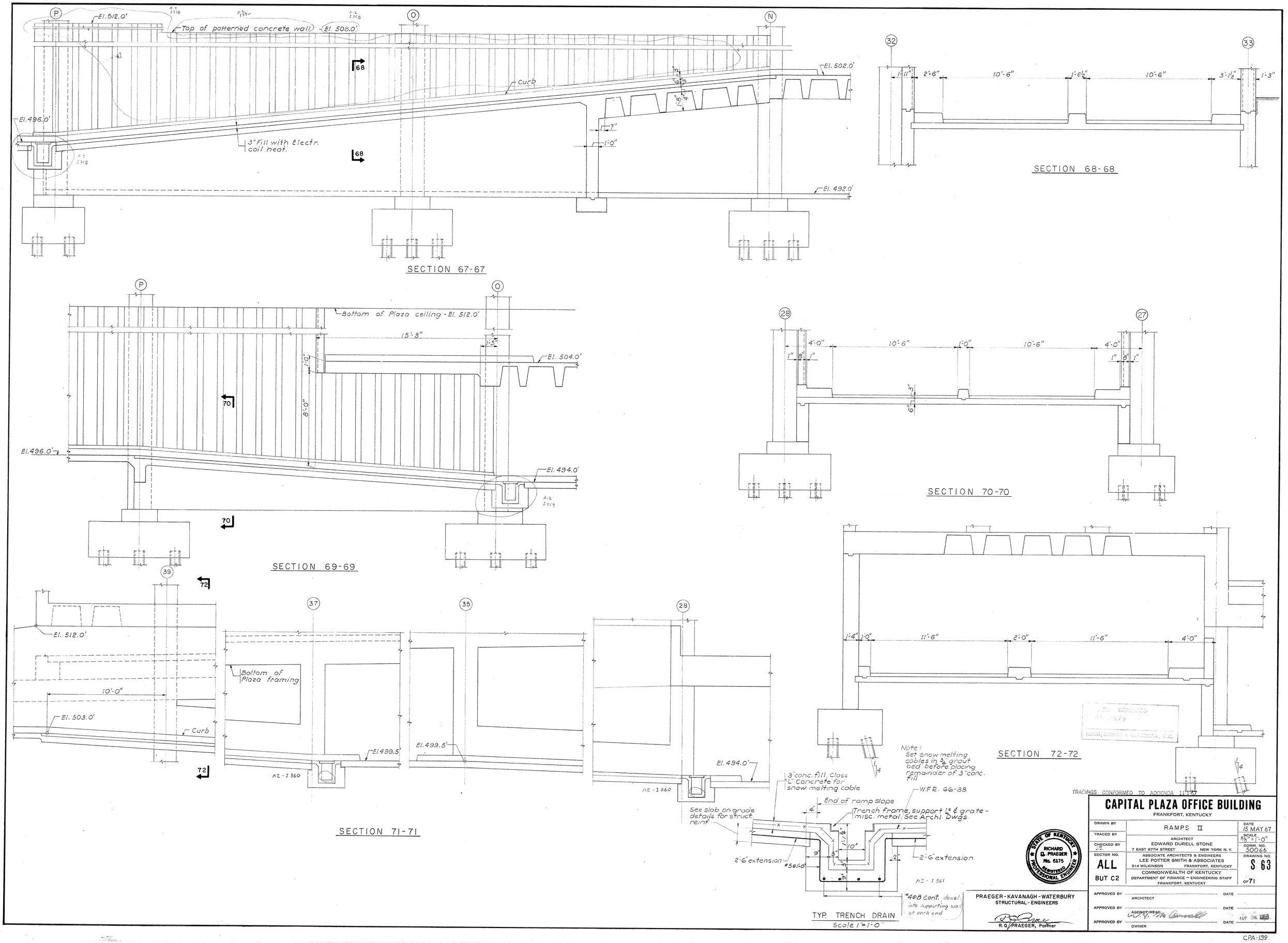

TRACINGS CONFORMED TO ADDENDA 11-1-67

CAPITAL PLAZA OFFICE BUILDING

FRANKFORT, KENTUCKY

DRAWN BY	RAMPS II	DATE 15 MAY 67
TRACED BY	ARCHITECT EDWARD DURELL STONE 7 EAST 67TH STREET NEW YORK N. Y.	SCALE 3/8"=1'-0"
CHECKED BY J.I.		COMM. NO. 50066
SECTOR NO. ALL BUT C2	ASSOCIATE ARCHITECTS & ENGINEERS LEE POTTER SMITH & ASSOCIATES 314 WILKINSON FRANKFORT, KENTUCKY	DRAWING NO. S 63
	COMMONWEALTH OF KENTUCKY DEPARTMENT OF FINANCE – ENGINEERING STAFF FRANKFORT, KENTUCKY	OF 71

STATE OF KENTUCKY RICHARD Q. PRAEGER No. 6175 REGISTERED PROFESSIONAL ENGINEER

PRAEGER-KAVANAGH-WATERBURY
STRUCTURAL-ENGINEERS

R.Q. PRAEGER, Partner

APPROVED BY ARCHITECT DATE

APPROVED BY AGENCY HEAD DATE

APPROVED BY OWNER DATE MAY 24 1967

CPA-139

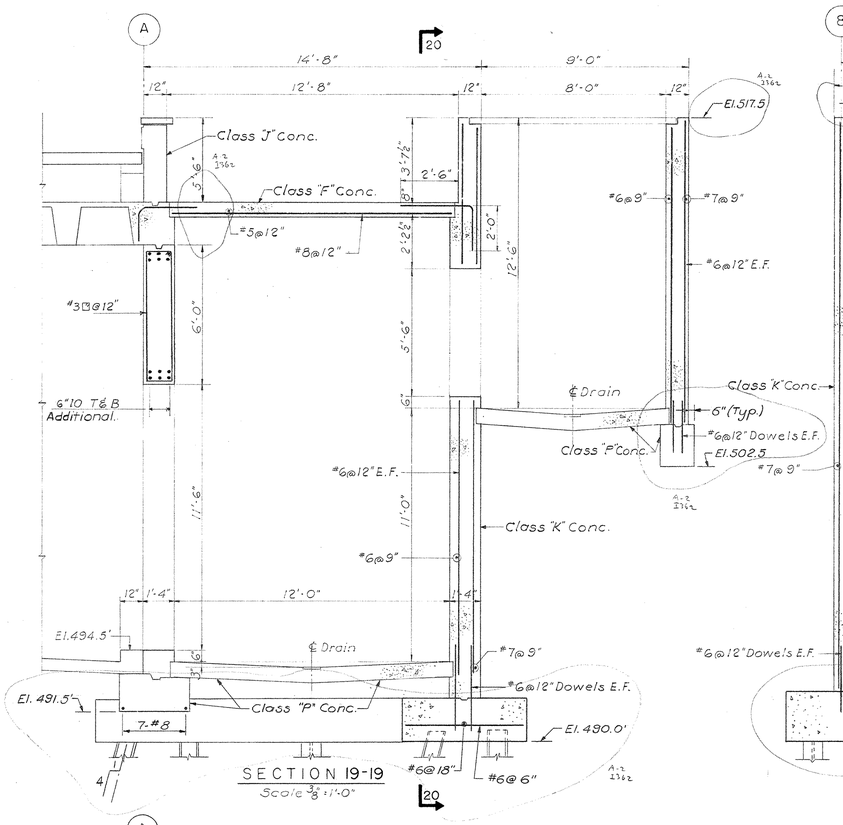

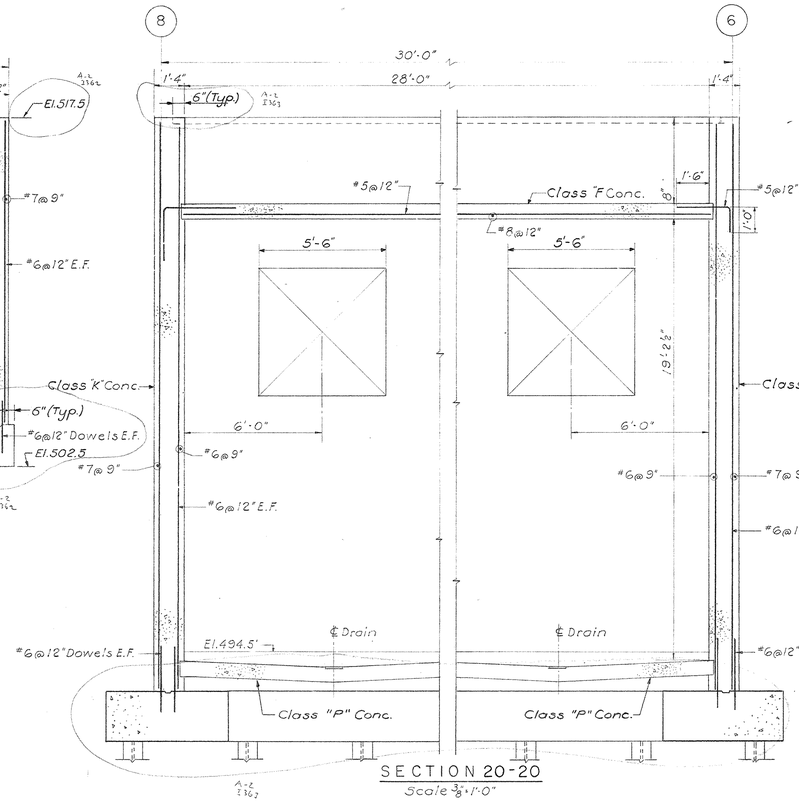

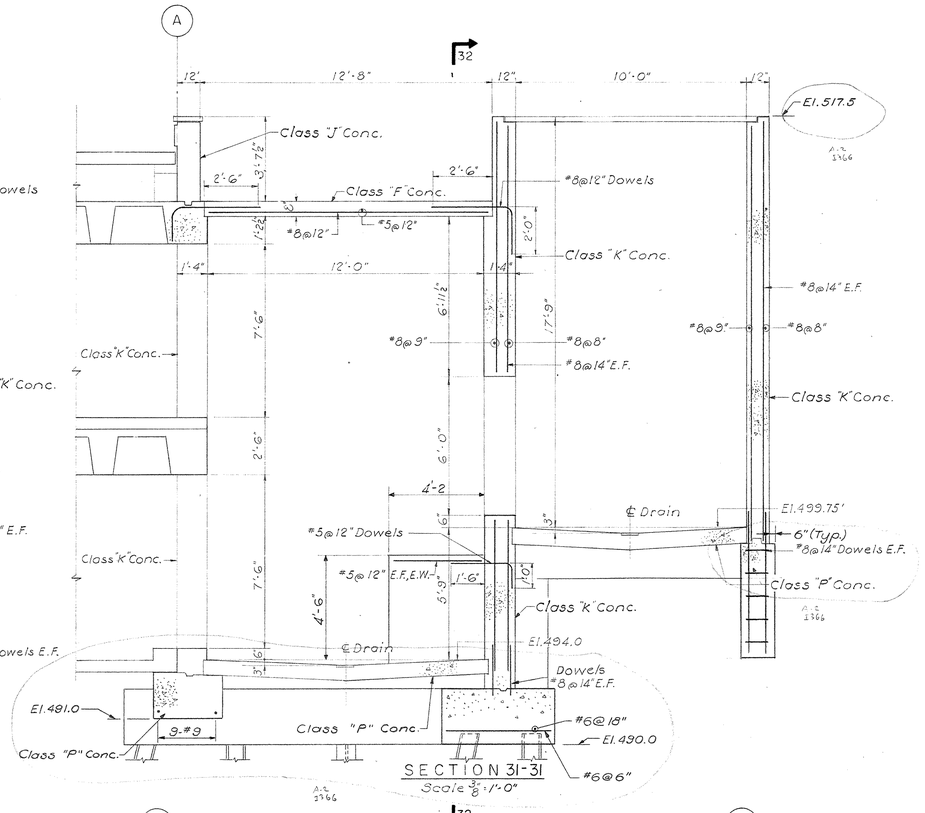

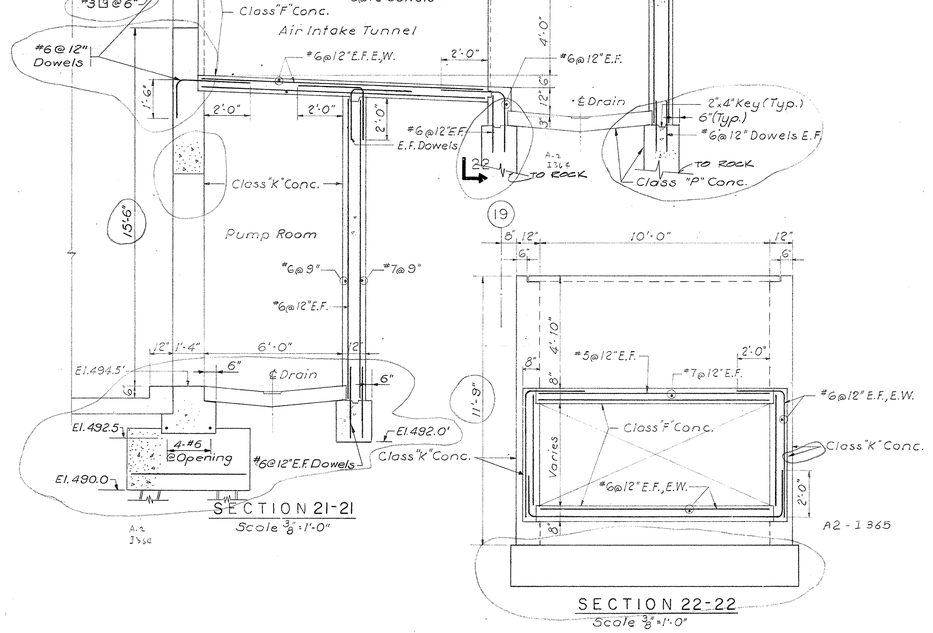

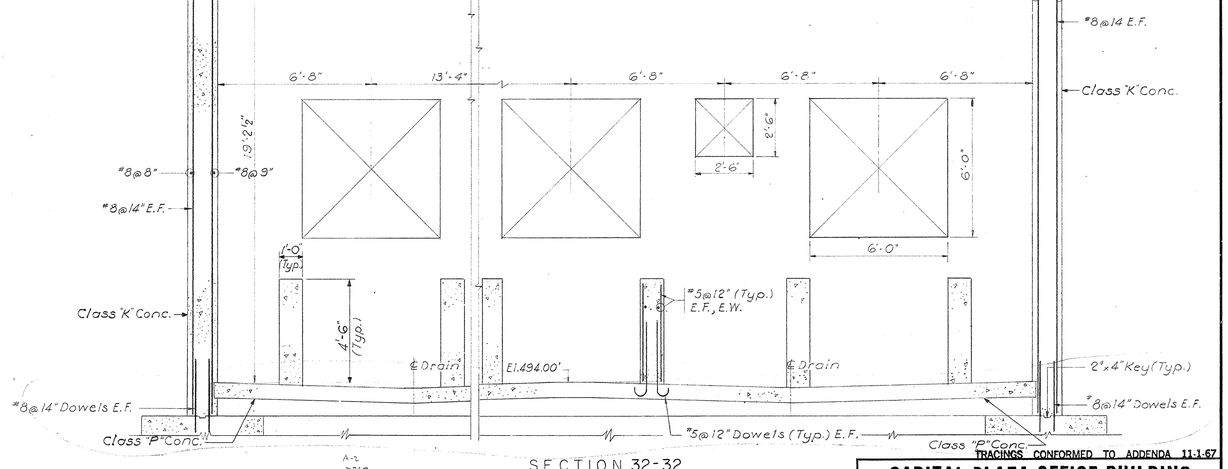

SECTION 32-32
Scale 3/8"=1'-0"

NOTES:
1. All piles 10 BP 42.
2. Where rock is encountered, eliminate piles and provide 6" embedment of footing in rock.

TRACINGS CONFORMED TO ADDENDA 11-1-67

CAPITAL PLAZA OFFICE BUILDING
FRANKFORT, KENTUCKY

DRAWN BY	FOUNDATION & MISC. SECTIONS 1	DATE 15 MAY 67
TRACED BY	ARCHITECT EDWARD DURELL STONE 7 EAST 67TH STREET NEW YORK N.Y.	SCALE AS NOTED
CHECKED BY J.E.		COMM. NO. 50066
SECTOR NO. ALL BUT C2	ASSOCIATE ARCHITECTS & ENGINEERS LEE POTTER SMITH & ASSOCIATES 314 WILKINSON FRANKFORT, KENTUCKY	DRAWING NO. S 64
	COMMONWEALTH OF KENTUCKY DEPARTMENT OF FINANCE – ENGINEERING STAFF FRANKFORT, KENTUCKY	OF 71

APPROVED BY ARCHITECT — DATE

APPROVED BY AGENCY HEAD — DATE

APPROVED BY OWNER W.F. McConnell — DATE JAN 29 1968

STATE OF KENTUCKY — RICHARD Q. PRAEGER No. 6175 REGISTERED PROFESSIONAL ENGINEER

PRAEGER-KAVANAGH-WATERBURY
STRUCTURAL-ENGINEERS
R.Q. PRAEGER, Partner

CPA-140

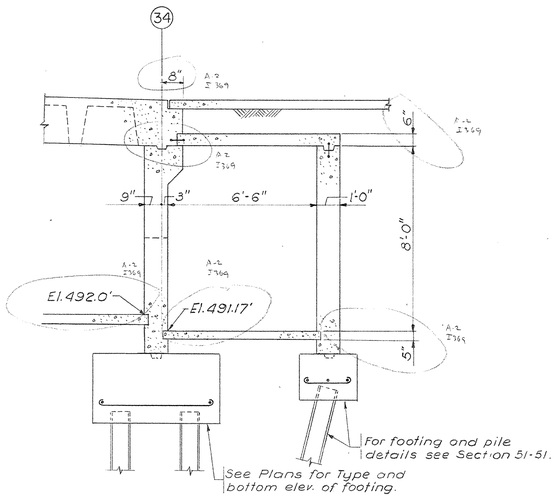

SECTION 91 - 91

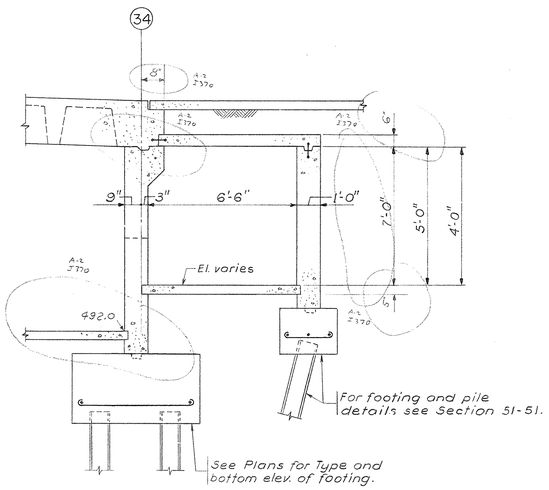

SECTION 90 - 90

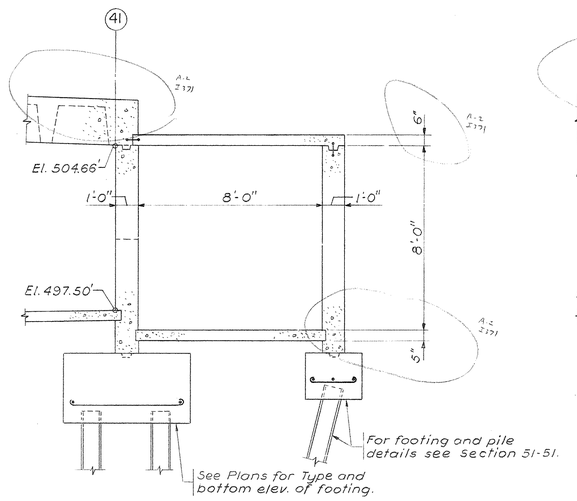

SECTION 89 - 89

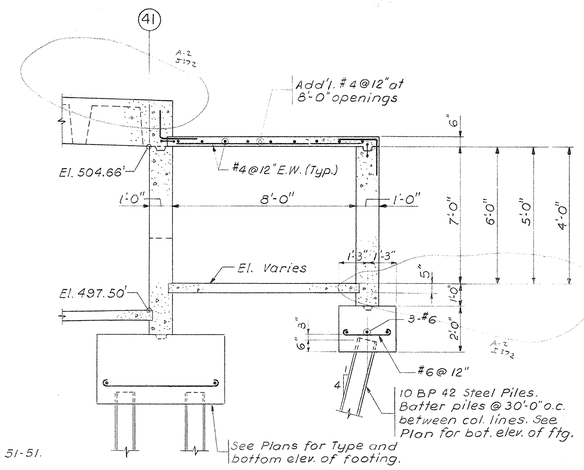

SECTION 51 - 51

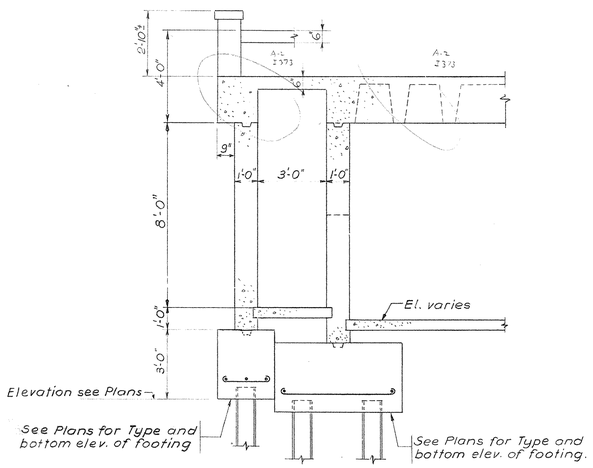

SECTION 92 - 92

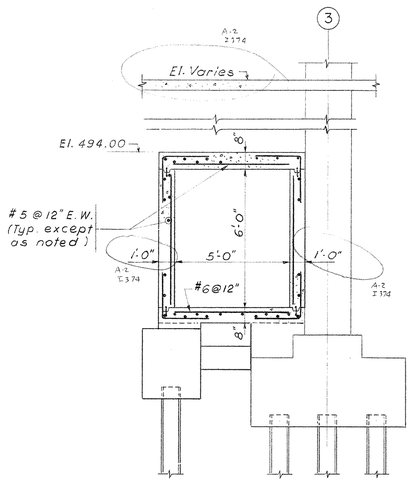

SECTION 86 - 86

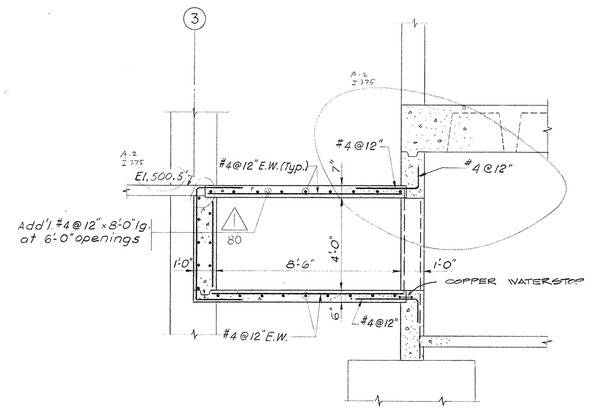

SECTION 87 - 87

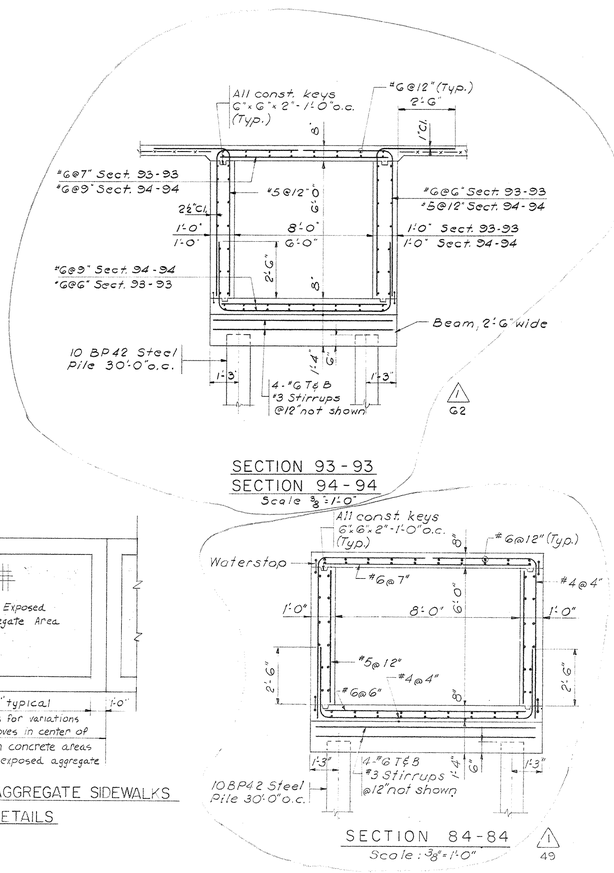

SECTION 93 - 93
SECTION 94 - 94
Scale ⅜"=1'-0"

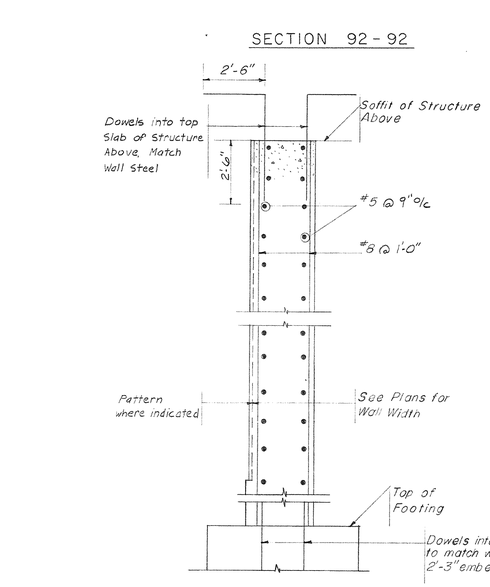

TYPICAL PATTERNED & INTERIOR WALL REINFORFING STEEL

Use for all walls supporting structure where steel is not otherwise indicated. - Not to Scale

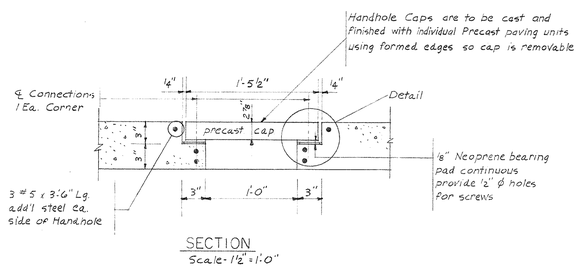

SECTION
Scale - 1½" = 1'-0"

TYPICAL HANDHOLE DETAIL

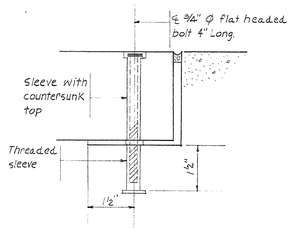

DETAIL
Scale - one half full size

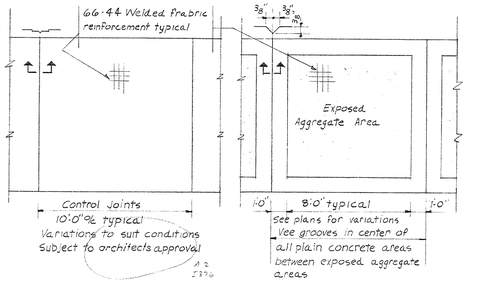

PLAIN SIDEWALKS

EXPOSED AGGREGATE SIDEWALKS

TYPICAL SIDEWALK DETAILS
N.T.S.

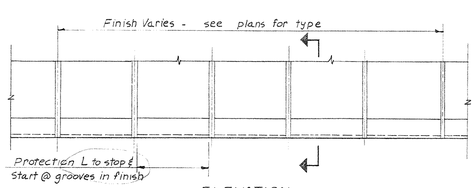

ELEVATION

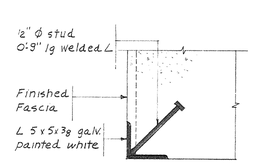

SECTION

TYPICAL ENTRANCE SOFFIT REINFORCEMENT
Provide at all points into and within building where traffic can pass beneath structure above - Not to Scale

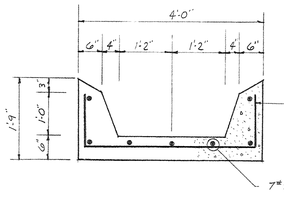

INTERCEPT SECTION
Scale ½"=1'-0"
see dwg no A-3 for location

Change Proposal No. 1
All circled areas noted thus 1
Item No.

PRAEGER - KAVANAGH - WATERBURY
STRUCTURAL - ENGINEERS
R.Q. PRAEGER, Partner

STATE OF KENTUCKY
RICHARD Q. PRAEGER
No. 6175
REGISTERED PROFESSIONAL ENGINEER

TRACINGS CONFORMED TO ADDENDA 11-1-67

CAPITAL PLAZA OFFICE BUILDING

FRANKFORT, KENTUCKY

DRAWN BY	FOUNDATION & MISC; SECTIONS II	DATE 15 MAY 67
TRACED BY		SCALE AS NOTED
CHECKED BY R.Q.P.	ARCHITECT EDWARD DURELL STONE 7 EAST 67TH STREET NEW YORK N. Y.	COMM. NO. 50066
SECTOR NO. ALL BUT C2	ASSOCIATE ARCHITECTS & ENGINEERS LEE POTTER SMITH & ASSOCIATES 314 WILKINSON FRANKFORT, KENTUCKY	DRAWING NO. S65
	COMMONWEALTH OF KENTUCKY DEPARTMENT OF FINANCE — ENGINEERING STAFF FRANKFORT, KENTUCKY	OF 71

APPROVED BY _____ ARCHITECT DATE _____

APPROVED BY _____ AGENCY HEAD DATE _____

APPROVED BY W. F. McConnell OWNER DATE MAY 24 1967

CPA 141

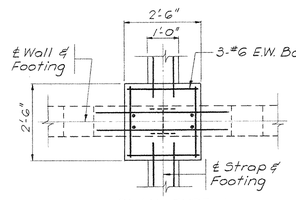

PLAN TYPE I

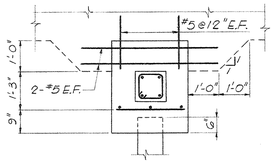

SECTION

TYPE I FOOTING

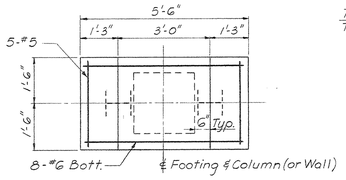

PLAN TYPE II

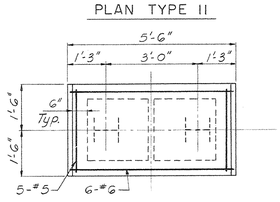

PLAN TYPE IIA

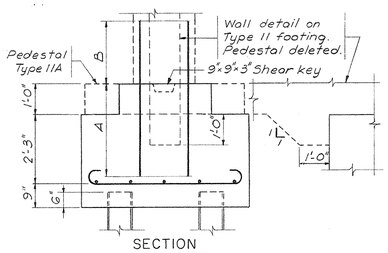

SECTION

TYPE II & IIA FOOTING

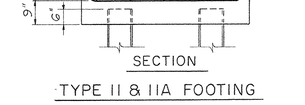

PLAN TYPE III

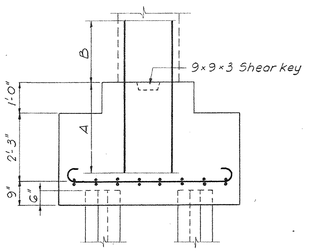

SECTION

TYPE III FOOTING

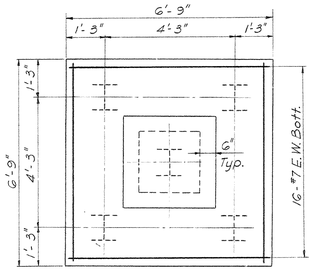

PLAN TYPE V

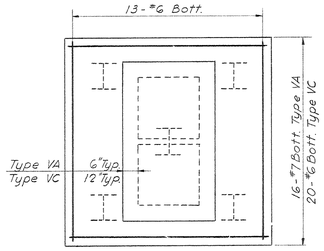

PLAN TYPES VA & VC

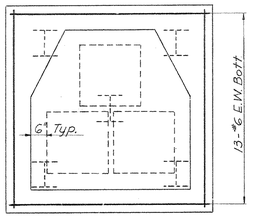

PLAN TYPE VB

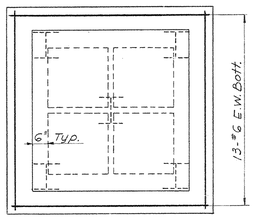

PLAN TYPE VD

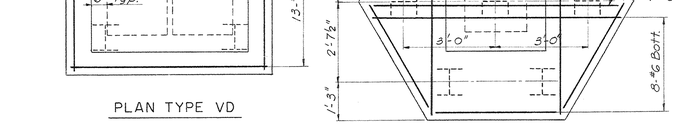

PLAN TYPE VII

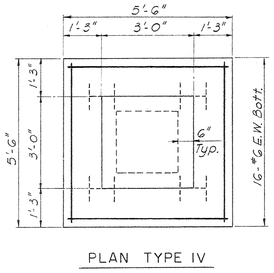

PLAN TYPE IV

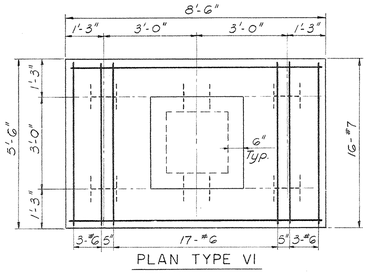

PLAN TYPE VI

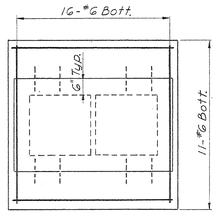

PLAN TYPE IVA

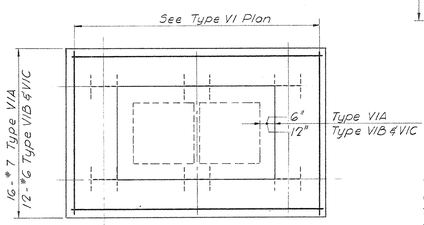

PLAN TYPE VIA, VIB & VIC

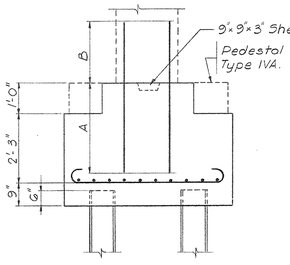

SECTION

TYPE IV & IVA FOOTING

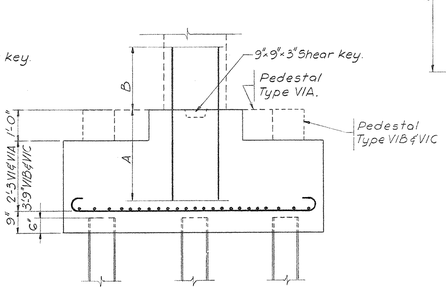

SECTION

TYPE VI, VIA, VIB & VIC FOOTING

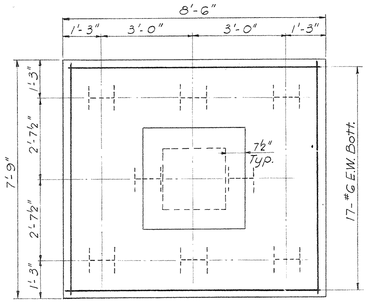

PLAN TYPE VIII

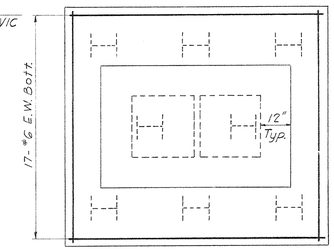

PLAN TYPE VIIIA

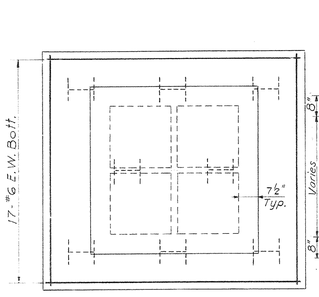

PLAN TYPE VIIIB

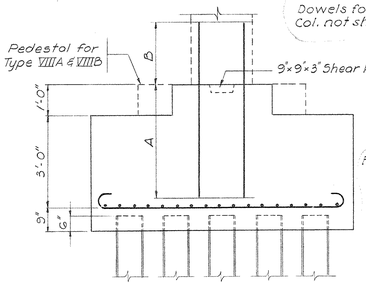

SECTION

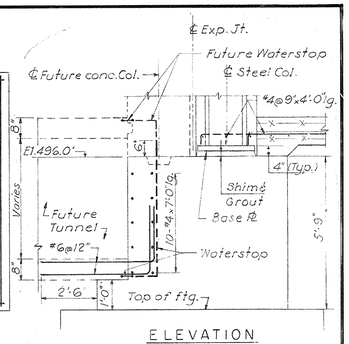

ELEVATION

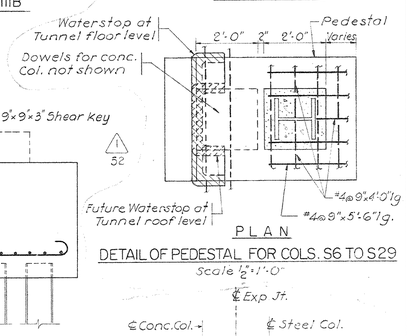

PLAN

DETAIL OF PEDESTAL FOR COLS. S6 TO S29

Scale ½"=1'-0"

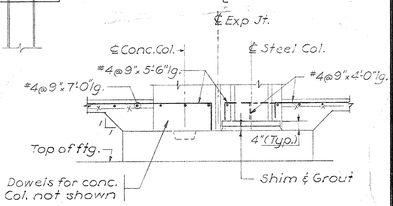

DETAIL OF SLAB AT PEDESTAL OF COLS. BOTH SIDES OF MERO ST EXCEPT COLS S6 TO S29

Scale ½"=1'-0"

TYPE VIII, VIIIA & VIIIB FOOTING

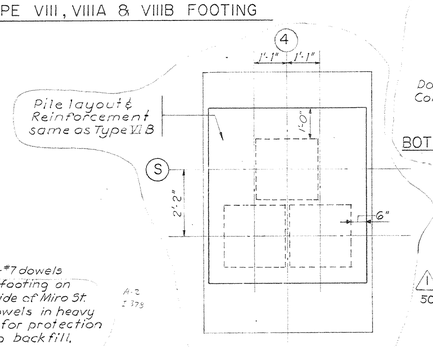

PLAN TYPE VI E

Scale ½"=1'-0"

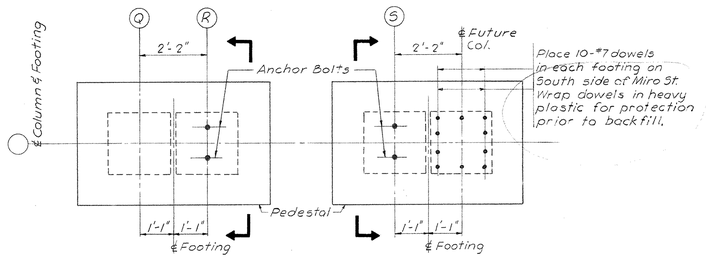

PLAN

PLAN

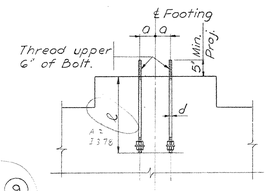

SECTION

DETAIL OF ANCHOR BOLT LOCATION AND SIZE

Base Plate*	a	d	ℓ
17"x17"	5½"	1"	30"
23"x23"	8½"	1¼"	36"

*For Column see Dwg. No. 567.

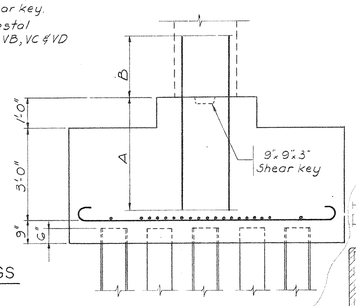

SECTION

TYPE V, VA, VB, VC & VD FOOTINGS

SECTION

TYPE VII FOOTING

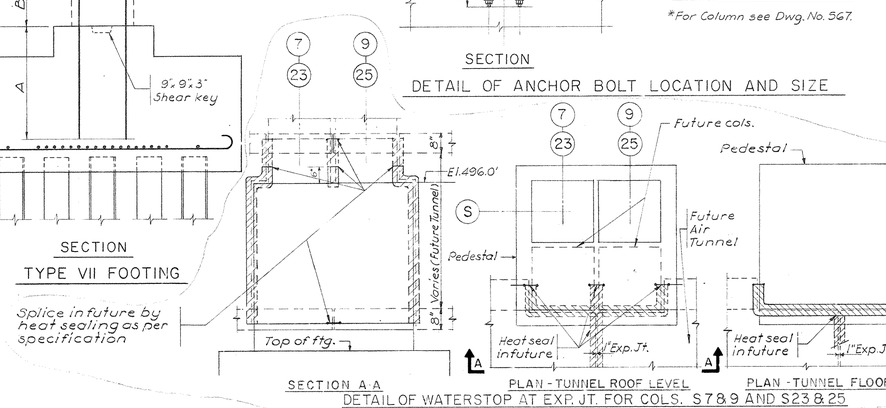

SECTION A-A

PLAN - TUNNEL ROOF LEVEL

PLAN - TUNNEL FLOOR LEVEL

DETAIL OF WATERSTOP AT EXP. JT. FOR COLS. S7 & 9 AND S23 & 25

Scale ½"=1'-0"

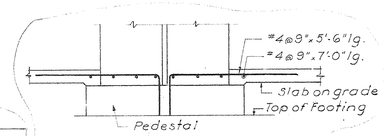

DETAIL OF SLAB AT PEDESTAL OF EXTERIOR COLUMN

Scale ½"=1'-0"

NOTES

1. Piles in Footing Types VC, VD, VIB and VIE to be 14BP73. All other piles to be 10BP42.
2. Concrete for Type VIB & VIE to be f'c = 4000 psi. All other concrete to be f'c = 3000 psi.
3. Embedment length 'A' shall be 24 Diameters and tap length 'B' shall be 30 Diameters. For bar sizes see column schedule, Dwg. No. S67.
4. Footing Types in Sector B1, C1 and D1 which are suffixed with the letter (P) are to have piles battered at a one horizontal to eight vertical slope. See plans for number of piles and direction of batter.

Change Proposal No. 1

All circled Areas noted thus (1) Item No.

TRACINGS CONFORMED TO ADDENDA 11-1-67

CAPITAL PLAZA OFFICE BUILDING

FRANKFORT, KENTUCKY

DRAWN BY C.A.R.	FOUNDATION SCHEDULE & DETAILS	DATE 15 MAY 67
TRACED BY	ARCHITECT EDWARD DURELL STONE, 7 EAST 67TH STREET, NEW YORK N.Y.	SCALE AS NOTED
CHECKED BY J.T.	ASSOCIATE ARCHITECTS & ENGINEERS LEE POTTER SMITH & ASSOCIATES, 314 WILKINSON, FRANKFORT, KENTUCKY	COMM. NO. 50066
SECTOR NO. ALL BUT C2	COMMONWEALTH OF KENTUCKY, DEPARTMENT OF FINANCE – ENGINEERING STAFF, FRANKFORT, KENTUCKY	DRAWING NO. S 66 OF 71

STATE OF KENTUCKY – RICHARD Q. PRAEGER No. 6175 REGISTERED PROFESSIONAL ENGINEER

PRAEGER-KAVANAGH-WATERBURY
STRUCTURAL-ENGINEERS
R.Q. PRAEGER, Partner

APPROVED BY ARCHITECT — DATE

APPROVED BY AGENCY HEAD — DATE MAY 24 1967

OWNER

HOSKINS, POTTER & BLACKMAN, INC.

CPA-142

COLUMN SCHEDULE

COLUMN NO.	B3, B6, B8, B11, B13, B19, B21, B24, B26, B29, B30, B32, B33	B5, B15, B16	B27	B4, B28, C4, C28	B34	C3, C6, C8, C11, C13, C15, C16, C19, C21, C24, C26, C30, C32, C33.	B35, B36, B37, B38, B39, B40, C35, C36, C37, C38 C39, C40	C27	D4 C5 C29	C34	D2, D3, D6, D8, D11, D13, D15, D16, D19, D21, D24, D26, D27, D29, D30, D32, D33	D5, D28	D35, D36, D37, D38, D39, D40	, D34	A27
SIZE	24"x 24"	24"x 24"	24"x 24"	24"x 24"	18"x 24"	24"x 24"	24"x 24"	24"x 24"	24"x 24"	18"x 18"	24"x 24"	24"x 24"	24"x 24"	18"x 18"	24 x 24
PLAZA FLOOR															
MEZZANINE FLOOR	10-#7 #4@12 Ties (3 Sets)	10-#7 #4@12 Ties (3 Sets)	10-#8 #4@12 Ties (3 Sets)	10-#7 #4@12 Ties (3 Sets)	10-#6 #3@12 Ties (3 Sets)	10-#7 #4@12 Ties (3 Sets)	10-#7 #4@12 Ties (3 Sets)	10-#7 #4@12 Ties (3 Sets)	10-#7 #4@12 Ties (3 Sets)	8-#6 #3@12 Ties (2 Sets)	10-#7 #4@12 Ties (3 Sets)	10-#7 #4@12 Ties (3 Sets)	10-#7 #4@12 Ties (3 Sets)	8-#6 #3@12 Ties (2 Sets)	12-#11 #4@12 Ties (3 Sets)
GROUND FLOOR	10-#7 #4@12 Ties (3 Sets)	10-#8 #4@12 Ties (3 Sets)	10-#9 #4@12 Ties (3 Sets)	12-#11 #4@12 Ties (3 Sets)	10-#6 #3@12 Ties (3 Sets)	10-#7 #4@12 Ties (3 Sets)		10-#8 #4@12 Ties (3 Sets)	10-#9 #4@12 Ties (3 Sets)	8-#6 #3@12 Ties (2 Sets)	10-#7 #4@12 Ties (3 Sets)	10-#8 #4@12 Ties (3 Sets)		8-#6 #3@12 Ties (2 Sets)	12-#11 #4@12 Ties (3 Sets)

COLUMN NO.	E2, E3, E4, E5, E6, E8, E11, E13, E15, E16, E19, E21, E24, E26, E27, E28, E29, E30, E32, E33	E35, E36, E37, E38, E39, E40	, E34	F2, F3, F4, F5, F6, F8, F11, F21, F24, F26, F27, F28, F29, F30, F32, F33.	F35, F36, F37, F38, F39, F40	F34	G2, G3, G4, G5, G6, G8, G24, G26, G27, G28, G29, G30, G32, G33	G11, G21 F13, F15 F16, F19	G34	H3, H4, H5, H6, H8, H24, H26, H27, H28, H29, H30, H32, H33	H2	H11, H21	, H34	G35, G36, G37, G38, G39, G40, H35, H36, H37, H38, H39, H40
SIZE	24"x 24"	24"x 24"	18"x 18"	24"x 24"	24"x 24"	18"x 24"	24"x 24"	22"x 24"	18"x 24"	24"x 24"	24"x 24"	22"x 24"	18"x 18"	24"x 24"
PLAZA FLOOR														
MEZZANINE FLOOR	10-#7 #4@12 Ties (3 Sets)	10-#7 #4@12 Ties (3 Sets)	8-#6 #3@12 Ties (2 Sets)	10-#7 #4@12 Ties (3 Sets)	10-#7 #4@12 Ties (3 Sets)	10-#6 #3@12 Ties (3 Sets)	10-#7 #4@12 Ties (3 Sets)	10-#7 #4@12 Ties (3 Sets)	10-#6 #3@12 Ties (3 Sets)	10-#7 #4@12 Ties (3 Sets)	10-#9 #4@12 Ties (3 Sets)	10-#7 #4@12 Ties (3 Sets)	8-#6 #3@12 Ties (2 Sets)	10-#7 #4@12 Ties (3 Sets)
GROUND FLOOR	10-#7 #4@12 Ties (3 Sets)		8-#6 #3@12 Ties (2 Sets)	10-#7 #4@12 Ties (3 Sets)		10-#6 #3@12 Ties (3 Sets)	10-#7 #4@12 Ties (3 Sets)	10-#7 #4@12 Ties (3 Sets)	10-#6 #3@12 Ties (3 Sets)	10-#7 #4@12 Ties (3 Sets)	10-#3 #4@12 Ties (3 Sets)	10-#7 #4@12 Ties (3 Sets)	8-#6 #3@12 Ties (2 Sets)	

COLUMN NO.	I2, I3, I4, I5, I6, I8, I24, I26, I27, I28, I29, I30, I32, I33	I35, I36, I37, I38, I39, I40, J35, J36, J37, J38, J39, J40	I11, I21	, I34	J3, J4, J5, J6, J8, J24, J26, J27, J28, J29, J30, J32, J33	J2	J11, J21	, J34	K2, K3, K4, K5, K6, K8, K24, K26, K27, K28, K29, K30, K32, K33	K11, K21, L12, L15, L16, L20	, K34, L34	L2, L3, L4, L5, L6, L7, L9, L23, L25, L26, L27, L28, L29, L30, L32, L33.	L15, L16	K35, K36, K37, K38, K39, K40, L35, L36, L37, L38, L39, L40
SIZE	24"x 24"	24"x 24"	22"x 24"	18"x 18"	24"x 24"	24"x 24"	22"x 24"	18"x 18"	24"x 24"	22"x 24"	18"x 24"	24"x 24"	24"x 24"	24"x 24"
PLAZA FLOOR														
MEZZANINE FLOOR	10-#7 #4@12 Ties (3 Sets)	10-#7 #4@12 Ties (3 Sets)	10-#7 #4@12 Ties (3 Sets)	8-#6 #3@12 Ties (2 Sets)	10-#7 #4@12 Ties (3 Sets)	10-#9 #4@12 Ties (3 Sets)	10-#7 #4@12 Ties (3 Sets)	8-#6 #3@12 Ties (2 Sets)	10-#7 #4@12 Ties (3 Sets)	10-#7 #4@12 Ties (3 Sets)	10-#6 #3@12 Ties (3 Sets)	10-#7 #4@12 Ties (3 Sets)	12-#11 #4@12 Ties (3 Sets)	10-#7 #4@12 Ties (3 Sets)
GROUND FLOOR	10-#7 #4@12 Ties (3 Sets)		10-#7 #4@12 Ties (3 Sets)	8-#6 #3@12 Ties (2 Sets)	10-#7 #4@12 Ties (3 Sets)	10-#9 #4@12 Ties (3 Sets)	10-#7 #4@12 Ties (3 Sets)	8-#6 #3@12 Ties (2 Sets)	10-#7 #4@12 Ties (3 Sets)	10-#7 #4@12 Ties (3 Sets)	10-#6 #3@12 Ties (3 Sets)	10-#7 #4@12 Ties (3 Sets)	12-#11 #4@12 Ties (3 Sets)	

COLUMN NO.	M2, M3, M4, M5, M6, M7, M9, M10, M22, M23, M25, M26, M27, M28, M29, M30, M32, M33,	, M34, N34	N2, N3, N5, N6, N7, N9, N10, N22, N23, N25, N26, N27, N29, N30, N32, N33, N14, N17.	N4	N15, N16	N28	M35, M36, M37, M38, M39, M40, N35, N36, N37, N38, N39, N40	02, 03, 04, 06, 07, 09, 010, 022, 023, 025, 026, 030, 032.	05, 027, 029	028	P2, P3, P6, P7, P9, P10, P15, P16, P22, P23, P25, P26, P29, P30, P32	P4, P5, P27	P14, P17	P28
SIZE	24"x 24"	18"x 18"	24"x 24"	24"x 24"	24"x 24"	24"x 24"	24 x 24	24"x 24"	24"x 24"	24"x 24"	24"x 24"	24"x 24"	24"x 24"	24"x 24"
PLAZA FLOOR														
MEZZANINE FLOOR	10-#7 #4@12 Ties (3 Sets)	8-#6 #3@12 Ties (2 Sets)	10-#7 #4@12 Ties (3 Sets)	10-#7 #4@12 Ties (3 Sets)	10-#10 #4@12 Ties (3 Sets)	10-#7 #4@12 Ties (3 Sets)	10-#7 #4@12 Ties (3 Sets)	10-#7 #4@12 Ties (3 Sets)	10-#7 #4@12 Ties (3 Sets)	10-#7 #4@12 Ties (3 Sets)	10-#7 #4@12 Ties (3 Sets)	10-#9 #4@12 Ties (3 Sets)	10-#7 #4@12 Ties (3 Sets)	12-#11 #4@12 Ties (3 Sets)
GROUND FLOOR	10-#7 #4@12 Ties (3 Sets)	8-#6 #3@12 Ties (2 Sets)	10-#7 #4@12 Ties (3 Sets)	10-#7 #4@12 Ties (3 Sets)	10-#10 #4@12 Ties (3 Sets)	10-#8 #4@12 Ties (3 Sets)		10-#7 #4@12 Ties (3 Sets)	10-#9 #4@12 Ties (3 Sets)	12-#11 #4@12 Ties (3 Sets)	10-#7 #4@12 Ties (3 Sets)	10-#9 #4@12 Ties (3 Sets)	10-#7 #4@12 Ties (3 Sets)	12-#11 #4@12 Ties (3 Sets)

COLUMN NO.	Q2, Q3, Q4, Q5, Q6, Q7, Q9, Q12, Q15, Q16, Q20, Q23, Q25, Q26, Q27, Q28, Q29, Q30	Q'4, Q'7, Q'9, Q'10, Q'22, Q'23, Q'25, Q'27 F3I, G3I K3I, L3I	Q5, Q6, Q26 D3I, E3I H3I, I3I J3I, M3I	F1, G1, L1, K1	D1, E1, H1, I1, J1, M1, N1	J'11, J'21	A19			
SIZE	24"x 24"	18"x 24"	18"x 18"	See Detail 'A'	See Det. 'B&C'	12"x 22"	16"x 32"			
PLAZA FLOOR										
MEZZANINE FLOOR	10-#7 #4@12 Ties (3 Sets)			8-#7 #4@12 Ties (3 Sets)	10-#7 #4@12 Ties (3 Sets)	6-#7 #4@12 Ties (2 Sets)	8-#8 #4@12 Ties (2 Sets)			
GROUND FLOOR	10-#7 #4@12 Ties (3 Sets)	10-#6 #3@12 Ties (3 Sets)	8-#6 #3@12 Ties (2 Sets)	8-#7 #4@12 Ties (3 Sets)	10-#7 #4@12 Ties (3 Sets)	6-#7 #4@12 Ties (2 Sets)	8-#8 #4@12 Ties (2 Sets)			

COLUMN NO.	R4, S4, R15, S15, R16, S16, R28, S28	R3, S3, R5, S5, R27, S27, R29, S29	R6, S6, R12, S12, R20, S20, R26, S26	R2, S2, R7, S7, R25, S25 R30, S30	R9, S9, R23, S23
SIZE	14WF202	14WF176	14WF150	14WF95	14WF87
PLAZA FLOOR					
BASE PLATE	23x28x1'-11"	23x28x1'-11"	23x28x1'-11"	17x1x1'-5"	17x1x1'-5"

Note: All column steel shall conform to ASTM A242

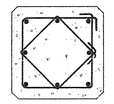

8 BARS

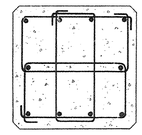

10 BARS

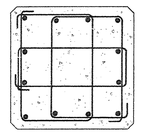

12 BARS

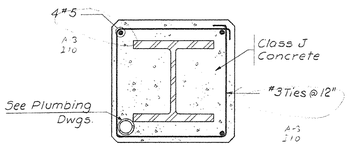

COLUMN DETAIL

COLUMN TIE DETAILS

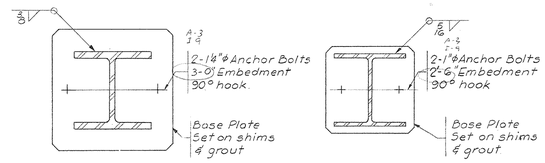

BASE PLATE DETAILS

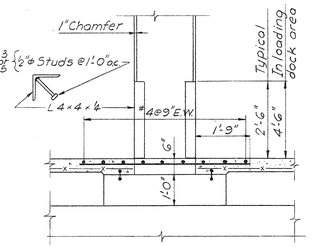

COLUMN AND SLAB DETAILS

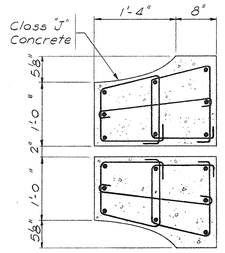

DETAIL "A"
At Expansion Joint

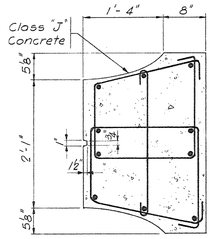

DETAIL "B"

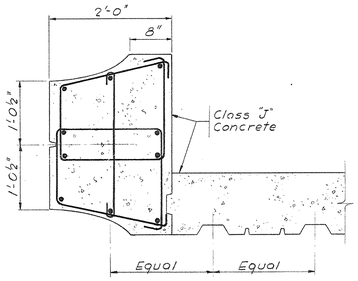

DETAIL "C"
For Columns D1 & N1 only

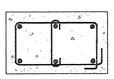

6 BARS

Note:
Scale 1"=1'-0"

STATE OF KENTUCKY
RICHARD Q. PRAEGER
No. 6175
REGISTERED PROFESSIONAL ENGINEER

TRACINGS CONFORMED TO ADDENDA 11-1-67

CAPITAL PLAZA OFFICE BUILDING

FRANKFORT, KENTUCKY

DRAWN BY C.A.R.	COLUMN SCHEDULE	DATE 15 MAY 67
TRACED BY		SCALE AS NOTED
CHECKED BY J.J.	ARCHITECT EDWARD DURELL STONE 7 EAST 67TH STREET NEW YORK N.Y.	COMM. NO. 50066
SECTOR NO. ALL BUT C2	ASSOCIATE ARCHITECTS & ENGINEERS LEE POTTER SMITH & ASSOCIATES 314 WILKINSON FRANKFORT, KENTUCKY	DRAWING NO. S 67
	COMMONWEALTH OF KENTUCKY DEPARTMENT OF FINANCE — ENGINEERING STAFF FRANKFORT, KENTUCKY	OF 71

APPROVED BY _____ ARCHITECT DATE _____

APPROVED BY _____ DATE _____

APPROVED BY _____ OWNER DATE 11-21-67

PRAEGER-KAVANAGH-WATERBURY
STRUCTURAL-ENGINEERS
R.Q. PRAEGER, Partner

CPA-143

JOIST SCHEDULE

MARK	WIDTH	BOTT. REINF. STR.	BOTT. REINF. BENT	TOP REINF. S or W	TOP REINF. N or E	STIR'PS	REMARKS
J100	10"	1#7	1#7				"H" STIRRUPS BOTH SIDES (32)-(33)
J101	10"	1#7	1#7	1#5			
J102	10"	1#7	1#7	1#6			"H" STIRRUPS AT WALL ONLY
J103	10"	1#7	1#7	1#7			A-2 I380
J105	10"	1#7	1#7	1#9			
J106	10"	1#7	1#7		1#5		
J107	10"	1#7	1#7		1#6		
J108	10"	1#7	1#7		1#7		"H" STIRRUPS AT WALL ONLY
J109	10"	1#7	1#7		1#8		A-2 I380
J110	10"	1#7	1#7		1#9		
J111	10"	1#7	1#7	1#5	1#5		
J112	10"	1#7	1#7	1#6	1#6		
J113	10"	1#7	1#7	1#7	1#7		
J114	10"	1#7	1#7	1#8	1#8		
J120	10"	1#8	1#7				
J121	10"	1#8	1#7	1#5			
J123	10"	1#8	1#7	1#7			
J128	10"	1#8	1#7		1#7		"H" STIRRUPS AT WALL ONLY
J130	10"	1#8	1#7		1#9		
J133	10"	1#8	1#7	1#7	1#7		"H" STIRRUPS AT WALL ONLY
J135	17"	2#8	2#7	2#7	2#7		"H" STIRRUPS AT WALL ONLY SEE SECTION 54-54 DWG S-61
J136	25"	3#8	3#7	3#7	3#7		
J141	10"	1#8	1#8	1#7			A-2 I380
J142	10"	1#8	1#8		1#7		
J146	20"	2#8	2#8	2#7			
J161	10"	1#9	1#9	1#7			
J162	10"	1#9	1#9		1#7		"G" STIRRUPS AT WALL ONLY
J171	10"	1#10	1#9	1#7			"G" STIRRUPS AT WALL ONLY
J172	10"	1#10	1#9		1#7		A-2 I380
J173	10"	1#10	1#9	1#7	1#7		
J176	20"	2#10	2#9	2#7			
J177	20"	2#10	2#9		2#7		A-2 I380
J180	20"	2#7	2#7				
J181	20"	2#7	2#7	2#5			
J182	20"	2#7	2#7	2#6			
J183	20"	2#7	2#7	2#7			
J187	20"	2#7	2#7		2#6		
J188	20"	2#7	2#7		2#7		
J189	20"	2#7	2#7		2#8		
J190	20"	2#7	2#7		2#9		
J191	20"	2#7	2#7	2#5	2#5		
J193	30"	3#7	3#7	3#7			
J194	20"	2#7	2#7	2#8	2#8		
J195	50"	5#7	5#7	5#7			
J196	30"	3#7	3#7	3#7	3#7		
J197	50"	5#7	5#7	5#5			
J198	50"	5#7	5#7		5#5		
J199	50"	5#7	5#7		5#7		
J200	10"	2#7				F	
J201	14"	3#7				U	
J204	35"	7#7					
J205	23"	5#7				U	A-2 I380
J207	13"	3#7				UF	
J210	10"	1#7				F	
		1#8					
J211	14"	2#7				U	
		1#8					
J220	10"	2#8				F	
J221	14"	3#8				U	
J222	15"	3#8				U	
J223	20"	4#8				F	
J224	35"	7#8					
J225	17"	4#8				U	A-2 I380
J227	13"	3#8				UF	
J230	10"	1#8				F	
		1#9					
J233	20"	2#8				F	
		2#9					
J235	17"	3#9				U	
J240	10"	2#9				F	
J241	14"	3#9				U	
J243	20"	4#9				F	
J246	29"	6#9				UF	
J247	30"	6#9				F	A-2 I380
J250	10"	1#9				F	
		1#10					
J251	14"	2#9				U	
		1#10					
J253	20"	2#9				F	
		2#10					
J260	10"	2#10				F	
J261	14"	3#10				U	
J262	15"	3#10				U	
J263	20"	4#10				F	
J264	35"	7#10					
J266	29"	6#10				U	
J270	10"	3#9				F	
J273	20"	6#9				F	
J274	30"	9#9				F	A-2 I380
J280	10"	1#9				F	
		2#10					
J281	14"	4#10				U	
J283	20"	2#9				F	
		4#10					
J290	10"	3#10				F	
J293	20"	6#10				F	
J228	30"	6#8				U	A-2 I380
J248	30"	6#9				U	
J258	30"	6#10				U	
J209	50"	10#7					
J229	50"	10#8					
J239	50"	5#8					
		5#9					
J249	50"	10#9					
J259	50"	19#10					
J279	50"	15#9					
J289	50"	15#10					

MARK	WIDTH	BOTT. REINF. STR.	BOTT. REINF. BENT	TOP REINF. S or W	TOP REINF. N or E	STIR'PS	REMARKS
J300	6"	1#6	1#6				"D" STIRRUPS AT WALL
J301	6"	1#6	1#6	1#6			"D" STIRRUPS AT WALL-LINE (A) & (B)
J302	6"	1#6	1#6		1#6		"F" STIRRUPS @ RAMPS.
J303	6"	1#6	1#6	1#6	1#6		A-2 I380
J310	12"	2#7	1#7		3#9	U	
J311	12"	2#7	1#7	3#9	3#8	U	
J312	6"	1#7	1#7	1#7	1#7	F	
J320	17"	3#6	3#6			C	A-2 I380
J321	17"	3#6	3#6	3#6		C	
J322	17"	3#6	3#6		3#6	C	
J330	12"	2#7	2#7	2#7	2#7		#5 @ 4" STIRRUPS
J333	26"	4#7	4#7	4#7	4#7		#5 @ 4" STIRRUPS
J340	44"	7#6	7#6				
J341	44"	7#6	7#6	7#6			
J342	44"	7#6	7#6		7#6		
J343	21"	3#7	3#7	3#7	3#7	U	
J350	15"	3#6	2#6			U	
J352	15"	3#6	2#6		3#6	U	
J390	48"	7#6	7#6				
J391	48"	7#6	7#6	7#6			
J392	48"	7#6	7#6		7#6		
J400	6"	2#6				A	
J401	12"	3#7				U	
J402	15"	3#7				U	
J403	10"	3#7				U	
J404	16"	3#7				U	A-2 I380
J405	8"	2#7				U	
J500	10"	2#7				U	
J501	14"	3#7				U	
J502	30"	6#7				P	4-#4 STIRRUPS (P) (Q)
J503	20"	4#7				U	A-2 I380
J504	35"	7#7					
J505	17"	3#7					
J510	10"	2#7		2#7	CONT		1-#4 STIRRUP EACH SIDE OF WALL
J511	19"	4#7		4#7	CONT		
J512	31½"	6#7		6#7	CONT		1-#4 STIRRUP EACH SIDE OF WALL
J513	20"	4#7		4#7	CONT		
J514	22"	4#7		4#7	CONT		
J515	17"	3#7		3#7	CONT		
J519	50"	10#7		10#7	CONT		
J520	10"	1#7	1#7		1#7	O	A-2 I380
J523	10"	1#8	1#8	1#8			
J524	10"	1#9	1#9		1#7	K	
J525	10"	1#10	1#9		1#7	K	
J527	10"	2#9	1#9		1#7	J	
J528	10"	2#10	1#9		1#7	J	
J529	10"	1#7	1#7	1#7		O	A-2 I380
J530	14"	2#7	1#7		2#7	U	
J534	14"	2#9	1#9		2#7	U	
J535	14"	2#10	1#9		2#7	U	
J538	29"	6#10	3#9		3#7	U	
J545	35"	3#10	3#9		3#7		A-2 I380
J548	20"	4#10	2#9		2#7	J	
J550	6"	2#6					"C" STIRRUPS AT WALL
J551	12"	4#6				U	
J552	15"	5#6				U	A-2 I380
J560	6"	2#6		2#6	CONT		"B" STIRRUPS AT WALL
J561	15"	5#6		5#6	CONT	U	
J562	26"	8#6		8#6	CONT	U	A-2 I380
J563	12"	4#6	A-2 I380	4#6	CONT	U	
J564	19"	6#6		6#6	CONT	U	
J570	6"	1#6	1#6	1#6		B	
							A-2 I380
J580	6"	1#6	1#6		1#6	E	"A" STIRRUPS AT SOLID SLAB
J581	12"	2#6	2#6		2#6	U	
J582	15"	3#6	2#6		3#6	U	
J304	6"	1#7	1#7		3#7	F	
J305	6"	1#6	1#6		3#6	F	
J306	6"	1#6	1#6		2#6	F	
J307	6"	1#7	1#7	3#7	2#7	F	
J308	6"	1#6	1#6	3#6	2#6	F	
J309	6"	1#6	1#6	2#6	1#6	F	
J380	19"	3#6	3#6		3#6	U	A-2 I380
J382	19"	3#6	3#6	3#6		U	
J406	20"	6#6				U	
J407	19"	6"6				U	A-2 I380
J408	21"	7"6				U	
J409	26"	8"6				U	
J410	25"	8"6				U	
J553	17"	6"6				U	
J565	17"	6"6		6"6 CONT.		U	

MARK	WIDTH	BOTT. BAR	T&B CONT. REINF. FROM JOIST NO.	TOP BARS S or W BAR	TOP BARS S or W EXT.*	TOP BARS N or E BAR	TOP BARS N or E EXT.	STIR'PS	REMARKS
J601	39"		J602					U	
			J605						
J602	1'"	2#9		2#8	25¹			U	
J603	1'"	2#9						U	
J605	10"	2#9						F	A-2 I380
J606	10"	2#9						F	
J607	10"		J605					P	
J608	10"		J609						
			J611						
J609	10"	3#11		3#10	25¹	3#10	15¹		*E & W
				3#11		3#11			
J610	10"	2#9		3#10	14¹	3#10	14¹		*E & W
				2#9		2#9			
J611	10"	3#11		3#10	25¹			S	*W
				3#11					
J612	10"	3#11						M	
J613	10"	4#10						M	
J614	60"		J613						
			J615						
J615	20"	4#10						M	
J617	10"		J613					P	
J618	60"		J619						
			J622						
J619	20"	4#10						M	
J620	20"	4#11						M	
J622	10"	3#10				3#10	15¹	O	*E
						2#9			
J623	10"	2#9		3#10	14¹	3#10			
				2#9		2#9	14¹		*E & W
J624	10"		J622					P	
J625	10"		J626						
J626	10"	2#10		3#10	15¹	2#11	15¹		*W
				2#8					
J627	10"	2#10		2#9	15¹	3#10	15¹	O	
J628	10"	2#10						F	
		1#11							
J629	10"		J630					P	
J630	10"	4#10						N	
J631	45"		J630						
J632	65"	20#11							
J633	10"		J634						
J634	10"	2#10		2#9	13¹			O	
J635	10"		J636					P	
J636	10"	4#10				2#7	13¹	S	
J637	10"		J638						
J638	10"	1#8		1#9	13¹			O	
		1#9		1#10					
J639	10"		J640					P	
J640	10"	3#11						M	
J641	60"	15#11							
J642	10"	2#10						F	
		1#9							
J643	10"		J644						
J644	10"	1#10		1#9	15¹	3#10	15¹		
		1#9		1#10					
J645	10"	2#9		3#10	14¹	3#10	14¹		
J646	50"		J644					P	
J647	10"		J648						
J648	10"	2#10						F	A-2 I380
		1#9							
J649	10"	3#9						E	
J650	14"		J651					U	
J651	14"	2#10						U	
		1#9							
J652	14"	3#9						U	
J701	14"	1#9							
		1#10							
J702	14"	2#7						U	
J703	14"	1#7						U	
		1#8							
J704	14"	1#7						U	
		1#8							
J705	14"	2#7						U	
J706	10"	2#7						P	
J707	10"	2#7						P	
J708	10"	2#7						P	
J709	10"	2#7						P	
J710	10"	2#7							
J711	10"	2#7						Q	
J712	10"	2#7		1#7	15¹	2#7	10¹		
				1#8					
J713	10"	2#7		2#7	10¹	2#7	10¹		
J714	10"	2#7		2#7	10¹	2#7	10¹		
J715	10"	2#7		2#7	7¹				
J716	10"	2#8		2#7	10¹			S	
J717	10"	2#7						N	
J718	10"	2#7						N	
J719	10"	2#7						N	
J720	10"	2#7				2#7	7¹	Q	
J721	10"	2#10						N	A-2 I380
J722	10"	2#7						P	
J723	20"	2#10						R	
J724	20"	2#7						N	
J725	20"	2#7							
J726	20"	2#10						N	A-2 I380
J727	20"	2#7						N	
J728	20"	2#7						N	
J729	10"	2#10				3#10	10¹	O	
J730	10"	2#9		3#10	10¹	2#8	10¹		J730 & J731 Bott. steel continuous
J731	10"	2#9		2#8	10¹	3#10	10¹		*N
						2#9			
J732	10"	3#11		3#10	10¹	3#10	20¹		*S & N
				2#9		3#6			
J733	10"	3#6		3#10	10¹				*S
				3#6					
J734	10"	3#6		3#10	10¹	2#7	7¹		*S
				3#6					
J735	10"	2#8				1#8	10¹		
						1#9			
J736	10"	3#6		3#10	10¹	2#7	7¹		*S
				3#6					
J737	10"	2#10		2#7	10¹			O	*N
J738	10"	3#9						S	A-2 I380
J739	10"	3#11				3#10	20¹	O	*N
						3#6			
J740	10"	4#10						F	
J741	65"	15#11							
J742	10"	6#11						M	Bott. Steel Two Layers *S
J743	10"	3#6				2#7	7¹		
J744	10"	2#7							A-2 I380
J745	10"	3#11				3#10	15¹	O	*N
						3#6			
J746	10"	3#6		3#10	7¹	2#7	7¹		*S
				3#6					
J747	10"	2#10		2#7	10¹	2#7	10¹		
J748	10"	3#11		3#10	15¹	3#10	15¹		*N & S
				2#9		3#6			
J788	10"	3#9	J738					O	*N A-2 I380
J791	65"	15#11	J741						*N

*Extend bottom bars 48 diameters to splice with adjacent bottom bars, at the end(s) indicated in Remarks column.

#Extend top bars beyond ℄ Col. as indicated in schedule, towards ℄ of Span.

Where joist marks on plan are followed by "L" or "R", information shown in schedule is for mark "L" as shown & Mark "R" opposite hand.

A-2 I380

MARK	WIDTH	BOTT. REINF. STR	BOTT. REINF. BENT	TOP REINF. S or W	TOP REINF. N or E	STIR'PS	REMARKS
J801	21"	2#7		2#7	CONT		
J802	21"	2#7		2#7	CONT		
J803	10"	2#7		2#8	2#7		
J804	10"	2#7					
J805	10"	3#9		2#7	3#10		
J806	20"	1#8					
		1#9					
J807	10"	1#8					
		1#9					
J808	10"	3#11				M	
J809	10"	3#9				M	
J810	10"	3#9		2#7	3#10		
J811	10"	1#8					
		1#9					
J812	10"	3#11				M	
J813	10"	3#9				M	
J814	10"	3#9		2#7	3#9		
J815	10"	1#8					
		1#9					
J816	10"	3#11				M	
J817	10"	3#9				M	
J818	10"	3#9		2#7	3#9		
J819	10"	1#8					
		1#9					
J820	10"	3#11				M	
						M	
J821	10"	2#10				M	A-2 I380
J822	20"	3#11				M	
J823	20"	2#7				M	
J824	20"	3#9		2#7	3#9		
J825	10"	2#8					
J826	10"	3#9		2#7	3#9		
J827	10"	3#11				F	
J828	10"	2#10				F	
		1#9					
J829	14"	3#11				U	
J830	14"	2#10				U	
		1#9					
J851	14"	2#10				U	
		1#9					
J852	14"	1#7				U	
		1#8					
J853	14"	1#8				U	
		1#9					
J854	14"	2#8				U	
J855	14"	3#9			2#8		
J856	10"	2#10				F	
		1#9					
J857	10"	1#8				F	A-2 I380
		1#7					
J858	10"	1#9				F	
		1#8					
J859	10"	2#8				F	
J860	10"	3#9			2#8	K	
J861	10"	1#9		2#7	2#10		
		1#10					
J862	10"	2#7					
J863	10"	2#8		1#9	2#9		
				1#10			
J864	10"	2#7					
J865	10"	1#9		3#10	2#7	G	
		1#10					
J866	10"	2#10				N	
		1#9					
J867	10"	2#9				N	
J868	10"	2#10				N	
J869	10"	1#8				N	
		1#9					
J870	10"	3#11			2#9	T	
J871	10"	1#9		2#7	2#10		
		1#10					
J872	10"	2#7					
J873	10"	2#8		1#9	2#9		
				1#10			
J874	10"	2#7					
J875	10"	1#9		3#10	2#7	G	
		1#10					
J876	50"	2#9		4#7	4#10		
		2#10					
J877	50"	4#7					
J878	50"	4#7		2#9	4#9		
				2#10			
J879	50"	4#7					
J880	50"	4#10					
		2#9					
J881	50"	6#11					
J882	50"	6#9		4#7	6#9		

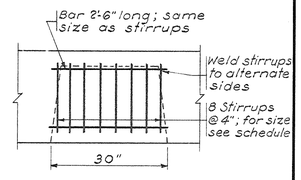

STIRRUP ASSEMBLY
Scale: ¾" = 1'-0"

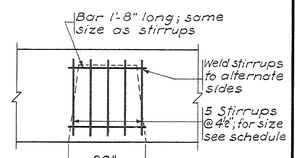

STIRRUP ASSEMBLY
Scale: ¾" = 1'-0"

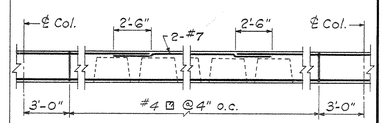

TYPE "U"
Scale: ½" = 1'-0"

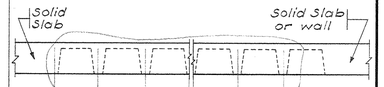

MARK	STIRRUP			SIZE		
A	#3					#3
B					#3	#3
C	#3				#3	#3
D				#3	#3	#3
E	#3			#3	#3	#3
F	#4	#4			#4	#4
G				#4	#4	#5
H				#3	#3	#4
J	#4	#4		#4	#4	#5
K	#4	#4		#3	#3	#4
L	#4	#4	#4	#3	#3	#4
M	#4	#4	#4	#4	#4	#4
N	#4	#4		#4	#4	#4
O	#4	#4				
P	#4					#4
Q	#4					
R	#4	#4				#4
S	#4	#4	#4			
T	#4	#4	#4	#4	#4 (A-2 I381)	#5

SLAB SCHEDULE

MARK	SIZE	TOP STEEL LW	TOP STEEL SW	BOTTOM STEEL LW	BOTTOM STEEL SW	REMARKS
M1	5	#5@12"	#5@12"	#5@12"	#5@12"	

TRACINGS CONFORMED TO ADDENDA 11-1-67

PRAEGER-KAVANAGH-WATERBURY
STRUCTURAL-ENGINEERS
R. D. PRAEGER, Partner

STATE OF KENTUCKY · RICHARD D. PRAEGER · No. 6175 · REGISTERED PROFESSIONAL ENGINEER

CAPITAL PLAZA OFFICE BUILDING
FRANKFORT, KENTUCKY

DRAWN BY C.A.R.	JOIST, BEAM & SLAB SCHEDULES	DATE 15 MAY 67
TRACED BY		SCALE AS NOTED
CHECKED BY J.D.	ARCHITECT EDWARD DURELL STONE, 7 EAST 67TH STREET, NEW YORK N. Y.	COMM. NO. 30066
SECTOR NO. ALL BUT C2	ASSOCIATE ARCHITECTS & ENGINEERS LEE POTTER SMITH & ASSOCIATES, 314 WILKINSON, FRANKFORT, KENTUCKY	DRAWING NO. S 68
	COMMONWEALTH OF KENTUCKY, DEPARTMENT OF FINANCE — ENGINEERING STAFF, FRANKFORT, KENTUCKY	OF 71

APPROVED BY ARCHITECT — DATE
APPROVED BY AGENCY HEAD — DATE
APPROVED BY OWNER — DATE

CPA-144

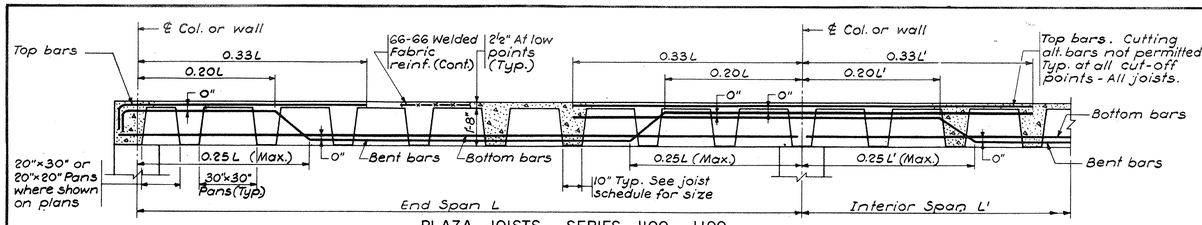

PLAZA JOISTS – SERIES J100 – J199

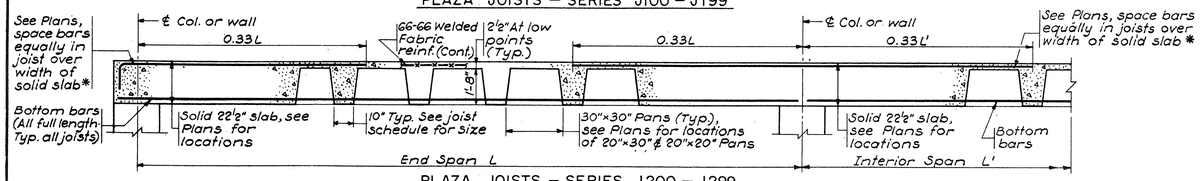

PLAZA JOISTS – SERIES J200 – J299

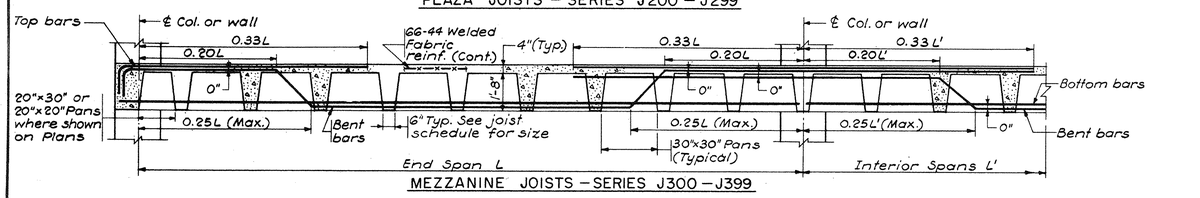

MEZZANINE JOISTS – SERIES J300 – J399

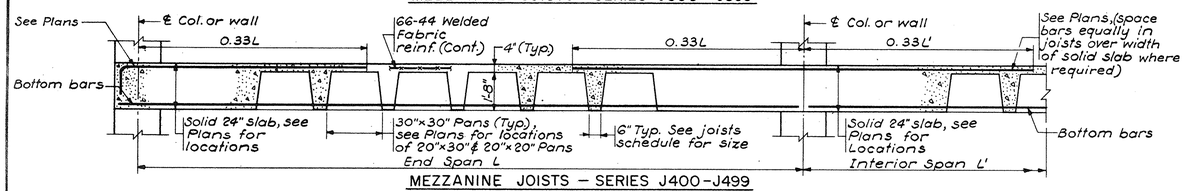

MEZZANINE JOISTS – SERIES J400 – J499

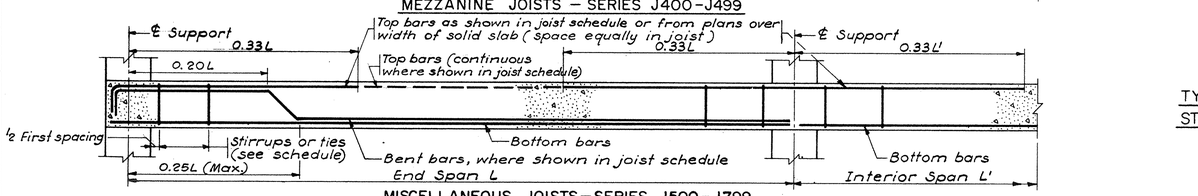

MISCELLANEOUS JOISTS – SERIES J500 – J799

TYPICAL JOIST DETAILS

N.T.S.

*If bar cannot be spaced equally in joists, place excess bars in joists closest to columns.

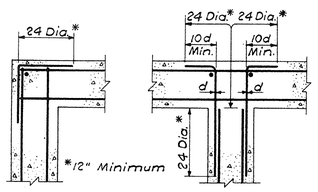

CORNER INTERSECTION

TYPICAL WALL REINFORCING DETAILS

See sections for steel sizes, vertical steel not shown.

N.T.S.

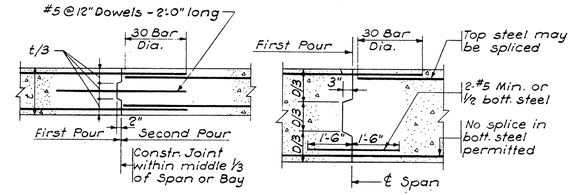

SLAB OR WALL BEAM

Transverse or vertical steel not shown. Ties & Stirrups not shown.

TYPICAL CONSTRUCTION JOINTS

Except for Joints at slip-formed walls

N.T.S.

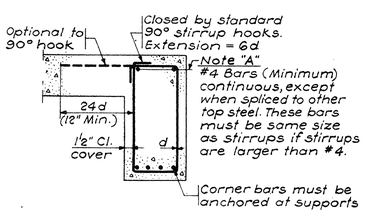

TYPICAL TIES – ALL EXT. BEAMS

Slab steel not shown

N.T.S.

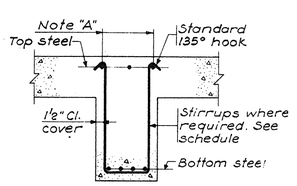

TYPICAL STIRRUPS – INT. BEAMS ONLY.

Slab steel not shown

N.T.S.

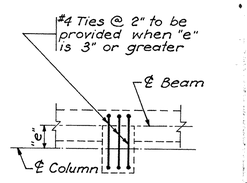

ADDITIONAL STEEL FOR ECCENTRIC BEAM TO COLUMN CONNECTION – TYPICAL

N.T.S.

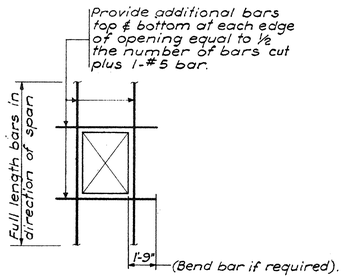

TYPICAL ADD'L REINFORCING STEEL FOR FLOOR OPENINGS

N.T.S.

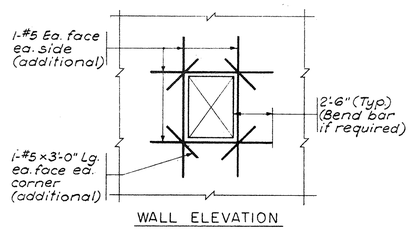

WALL ELEVATION

TYPICAL ADD'L REINFORCING STEEL FOR WALL OPENINGS NOT OTHERWISE DETAILED

N.T.S.

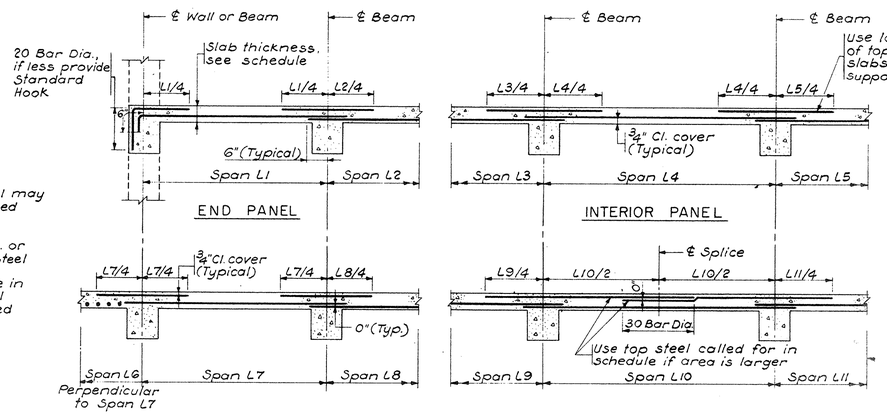

TYPICAL SLAB REINFORCING DETAILS

Temperature steel not shown – See General Notes

N.T.S.

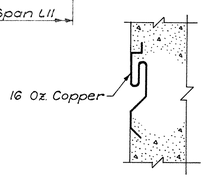

TYPICAL REGLET

N.T.S.

LOADING SCHEDULE

PLAZA LEVEL		PLAZA FRAMING LEVEL AT DEEP PLANTERS		PLAZA FRAMING LEVEL AT SHALLOW PLANTERS		PLAZA FRAMING LEVEL AREA BETWEEN PLANTERS		MEZZANINE LEVEL	
DEAD LOAD		DEAD LOAD		DEAD LOAD		DEAD LOAD		DEAD LOAD**	
6" P.C. Conc. Plank	75 psf	5½ Earth Fill	600	2-1/2½ Earth Fill	300	6" P.C. Conc. Plank	*75	Waffle Constr.	125
		W.P. & Protection	25	W.P. & Protection	25	6" Gravel	50	Miscellaneous	10
		Waffle Constr.	140	Waffle Constr.	140	W.P. & Protection	5		135 psf
			765 psf		465 psf	Waffle Constr.	140 psf		
LIVE LOAD or 12 Kip Concentration	250 psf	LIVE LOAD	50 psf	LIVE LOAD	50 psf	LIVE LOAD	*250 psf	LIVE LOAD	100 psf
TOTAL LOAD	325 psf	TOTAL LOAD	815 psf	TOTAL LOAD	515 psf	TOTAL LOAD	520 psf	TOTAL LOAD	235 psf

*As Concentrations Through Pedestals

** Sidewalks Taken Separately Where Applicable

CLASSES OF CONCRETE

(N.S. DENOTES "NOT SPECIFIED")

Class	Control Cyl. Strength 7 day	28 day	Cement Type	Color	Coarse Aggregate Type	Color	Max. Size	Fine Aggregate Type	Color	Air ±1-1/2%	Type Concrete	Locations (See Sections for Constr. Jts. Between Pours)
B	NS	5000	I	White	Crushed Stone	NS	1/2"	Sand	White	7%	Precast	Screens, Benches, Wall Copings, Stair Treads, Soffit Units, Planters
C	NS	5000	I	White	Natural Gravel	Brown	1/2"	Sand	White	7%	Precast	Plaza Paving Panels
D	NS	5000	I	White	Crushed Marble	White	3/8"	Sand	White	8%	Precast	Pool Cap
E	NS	5000	I	Gray	Crushed Stone	NS	3/4"	Sand	NS	6%	Precast	Pedestals, Car Bumpers
F	NS	4000	I	Gray	Lightweight	NS	3/4"	15% Sand 85% Lightweight	NS	6%	Cast-in-Place	Mezzanine and Plaza Floors, Stairs and Ramps Unless Noted
J	NS	4000	I	White	Crushed Stone	NS	3/4"	Sand	White	6%	Cast-in-Place	Arrival Court Columns; Patterned Walls; Mezzanine and Plaza Exposed Exterior Columns, Planters, Plaza Walls, and Stairs
K	NS	4000	I	Gray	Crushed Stone	NS	3/4"	Sand	NS	6%	Cast-in-Place	Mezzanine and Plaza Unexposed Columns and Walls
L	NS	3000	I	Gray	Lightweight	NS	1/2"	Sand	NS	7%	Cast-in-Place	Concrete Fill, Interior Sidewalks and Walls.
M	NS	3000	I	White	Natural Gravel	Brown	2"	Sand	White	6%	Cast-in-Place	Arrival Court Pool Circumferencial Strip
N	NS	3000	I	White	Natural Gravel	Brown	1/2"	Sand	White	7%	Cast-in-Place	Exposed Aggregate Sidewalks
P	NS	3000	I	Gray	Crushed Stone	NS	3/4"	Sand	NS	6%	Cast-in-Place	Slab on Grade, Footings, Foundation Walls and Pits

GENERAL NOTES

1. Design conforms to the applicable portions of the following standards:
   - Concrete - American Concrete Institute "Standard Building Code Requirements for Reinforced Concrete", (ACI 318-63). Ultimate strength procedures used throughout.
   - Steel - American Inst. of Steel Construction, "Specification for Design, Fabrication and Erection of Structural Steel for Buildings", Part 1, April 17, 1963.
   - Building Code - "The National Building Code", recommended by the National Board of Fire Underwriters, 1967.
   - Welding - "Code for Welding in Building Construction", American Welding Society, AWS D1.0-66.
   - "Recommended Practices for Welding Reinforcing Steel, Metal Inserts and Connections in Reinforced Concrete Construction", American Welding Society, AWS D12.1-61.
2. Reinforcing bar steel for #3 and #4 bars shall conform to ASTM A15-66, Intermediate Grade, and to ASTM A305-65. All other reinforcing bar steel shall conform to ASTM A432-66. All welded fabric reinforcement shall conform to ASTM A185-64.
3. Structural steel embedded items shall conform to ASTM A36-66 , except where otherwise noted.
4. Structural steel for framing over Mero Street shall conform to ASTM A 242-66 ASTM A441-66, ASTM A36-66 and ASTM A514-65 as indicated. A-2 7381
5. Minimum slab reinforcing bar steel for concrete slabs not scheduled shall consist of #3 @ 12 ea. way, top and bottom continuous.
6. Minimum slab reinforcing bar steel for concrete beams not scheduled shall consist of 2 #5 ea. bars top and bottom continuous, and #3 ties @ 12" o/c.
7. Minimum wall reinforcing bar steel for concrete walls not detailed shall consist of #5 @ 12 ea. way ea. face.
8. Unless otherwise shown, clear concrete cover to reinforcing bar steel shall be 1-1/2" for beams and columns, 3/4" for slabs and joists, 3/4" for exposed walls, 3" for concrete placed directly on the ground, and 2" for formed concrete surface exposed to the ground.
9. Unless otherwise shown, all splices in reinforcing bar steel shall be 30 bar diameters.
10. Building walls retaining earth shall be adequately braced top and bottom until floor systems and slabs on grade bracing these walls have been constructed and have obtained sufficient strength.
11. Dovetail slots shall be installed in all concrete surfaces facing or abutting masonry walls. Reglets in concrete surfaces shall be installed where called for on Architectural Drawings.
12. All embedded items shown on Architectural, Mechanical and Electrical Drawings shall be installed as indicated.
13. See Mechanical and Electrical Drawings for sleeves and conduits placed in the concrete work.
14. Provide #3 @ 12 bottom temperature steel in all roof and floor slabs perpendicular to slab span. Omit for two-way slabs.
15. See Architectural, Mechanical and Electrical Drawings for concrete equipment pads, inertia blocks, etc.
16. Construction joints in exterior exposed concrete surfaces other than those shown will not be permitted.
17. All structural steel embedded items indicated are furnishhd under the Structural Steel Section of the Specifications, except where noted as furnished under the Miscellaneous Metal Section, and both are placed under the Concrete Section of the Specifications. See Architectural Drawings for additional miscellaneous metal embedded items.
18. Minimum slab thickness not otherwise shown on plans is 4".
19. Piles shall be cut off 6" above bottom of footings.
20. All dowels into footings, walls, beams, etc., shall be tied in place prior to placing concrete.
21. All exposed concrete seen from the plaza level, from streets, or from the arrival court shall be white concrete.
22. Provide P.V.C. waterstops in all construction and expansion joints in the slab on grade for the Ground Floor and between this slab and its periphery supports. (1) 55
23. Bottom Elevations of footings noted thus: [ ]
24. Datum: USC&GS Mean Sea Level.
25. Construction loads shall not exceed 25% of the design live load. No truck cranes will be permitted to operate on the mezzanine level, plaza framing level, or the plaza level decks.
26. Air dry weight of Class "F" Concrete determined in accordance with American Concrete Institute Standard 301-66, Section 303 (b) shall not exceed 105 p.c.f.
27. Elevations of tops of concrete noted thus: ▭
28. Shearhead reinforcement noted thus: ⬡
29. Handholes in Plaza Paving Panels noted thus: ■

Change Proposal No. 1
All circled areas noted thus (1)
Item No.

TRACINGS CONFORMED TO ADDENDA 11-1-67

CAPITAL PLAZA OFFICE BUILDING

FRANKFORT, KENTUCKY

DRAWN BY	GENERAL NOTES & TYPICAL DETAILS	DATE 15 MAY 67
TRACED BY	ARCHITECT EDWARD DURELL STONE 7 EAST 67TH STREET NEW YORK N.Y.	SCALE AS NOTED
CHECKED BY JE		COMM. NO. 50066
SECTOR NO. ALL BUT C2	ASSOCIATE ARCHITECTS & ENGINEERS LEE POTTER SMITH & ASSOCIATES 314 WILKINSON FRANKFORT, KENTUCKY	DRAWING NO. S 69
	COMMONWEALTH OF KENTUCKY DEPARTMENT OF FINANCE – ENGINEERING STAFF FRANKFORT, KENTUCKY	OF 71

APPROVED BY _____ ARCHITECT DATE _____

APPROVED BY _____ DATE _____

APPROVED BY _____ AGENCY HEAD _____ DATE MAY 24 1967

OWNER

STATE OF KENTUCKY – RICHARD Q. PRAEGER No. 6175 – REGISTERED PROFESSIONAL ENGINEER

PRAEGER-KAVANAGH-WATERBURY
STRUCTURAL-ENGINEERS

R.Q. PRAEGER, Partner

CPA-145

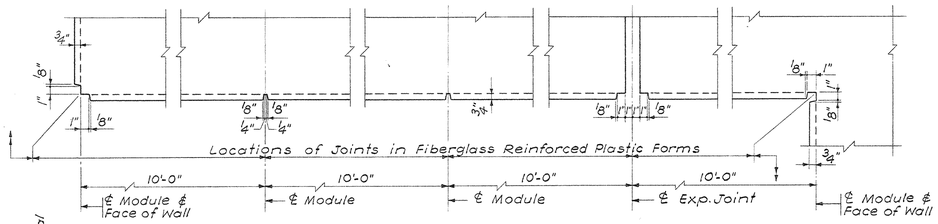

SECTION

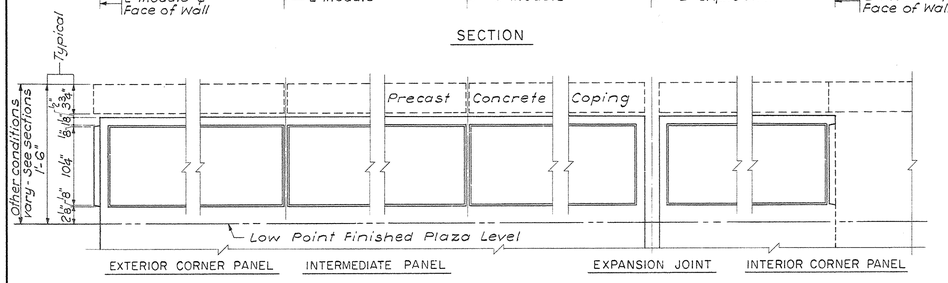

ELEVATION

INTERIOR PLANTER WALLS — FINISH TYPE "A"

Scale: 1½"=1'-0"

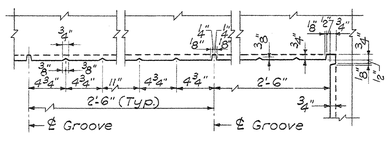

SECTION

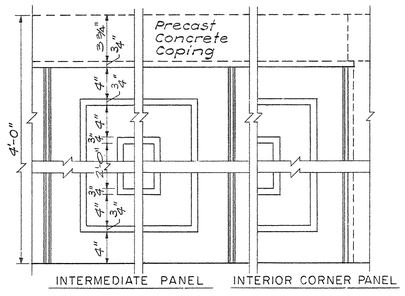

ELEVATION

WELL PLANTER WALLS — FINISH TYPE "G"

Scale: 1½"=1'-0"

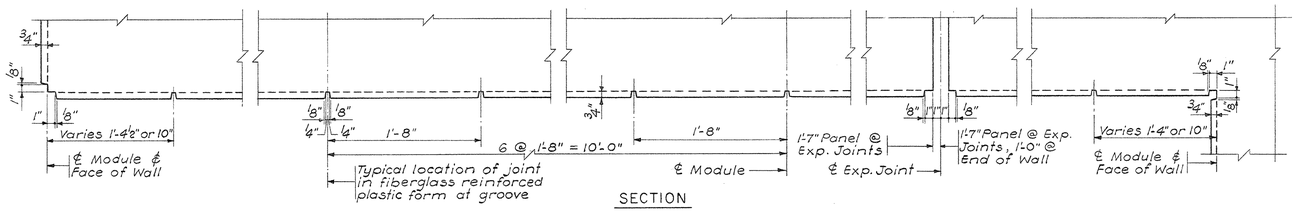

SECTION

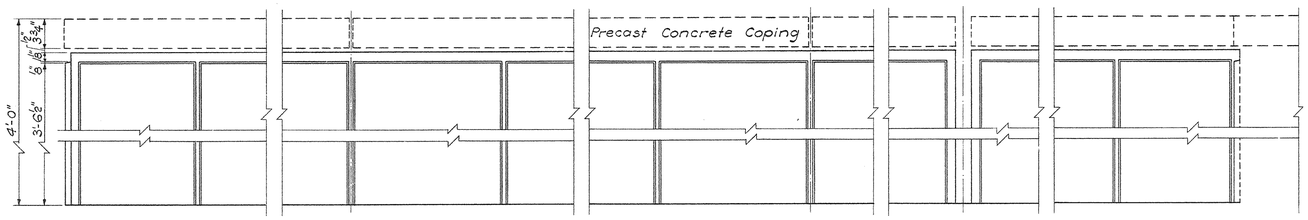

ELEVATION

EXTERIOR PLANTER WALLS — FINISH TYPE "B"

Scale: 1½"=1'-0"

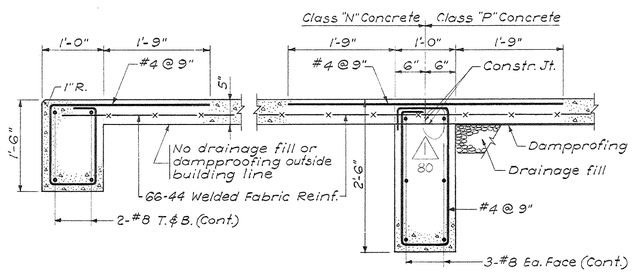

CONDITION AT EXTERIOR EDGE

CONDITION AT BUILDING LINE WITHOUT EXTERIOR WALL

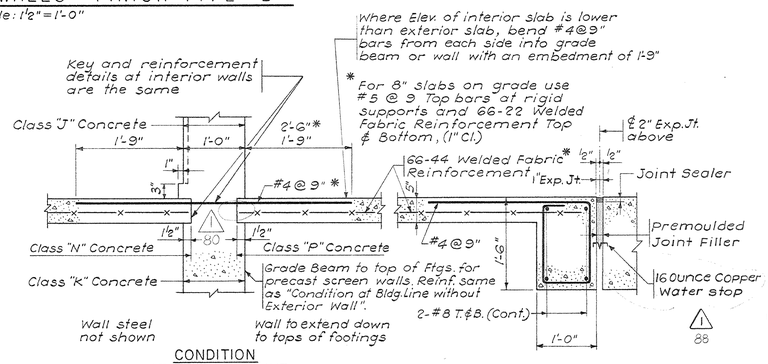

CONDITION AT BUILDING LINE WITH EXTERIOR WALL CONDITION AT PRECAST CONCRETE SCREENS SIMILAR

CONDITION AT EXPANSION JOINT

TYPICAL SLAB ON GRADE DETAILS

Scale: 1"=1'-0"

For slab details at interior columns, see Dwg. No. S67

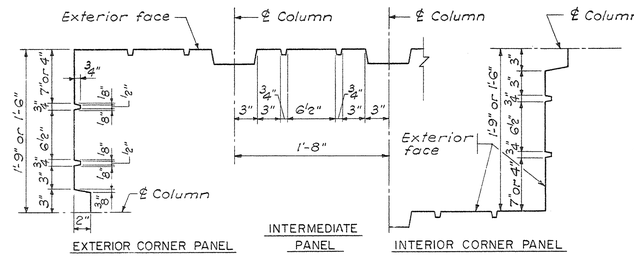

SECTION ELEVATION SECTION

PATTERNED CAST-IN-PLACE WALLS — FINISH TYPE "C"

Scale: 1½"=1'-0"

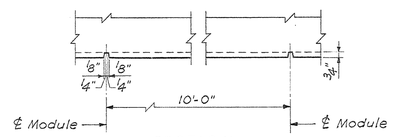

SECTION

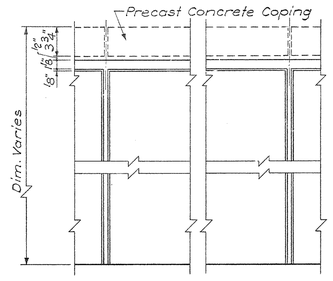

INTERMEDIATE PANEL

ELEVATION

WALLS — FINISH TYPE "D"

Scale: 1½"=1'-0"

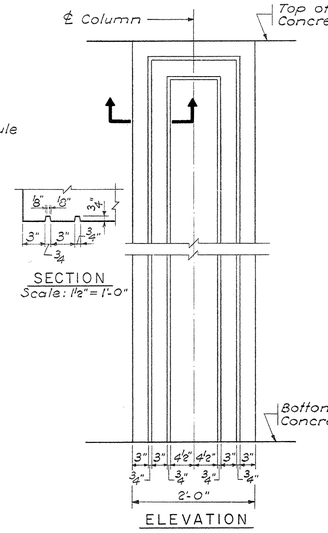

ELEVATION

COLUMN — FINISH TYPE "E"

Scale: ½"=1'-0"

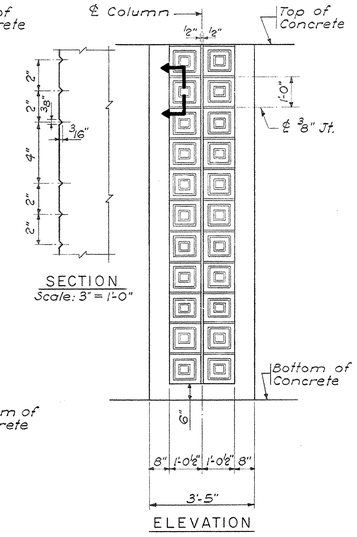

ELEVATION

COLUMN — FINISH TYPE "F"

Scale: ½"=1'-0"

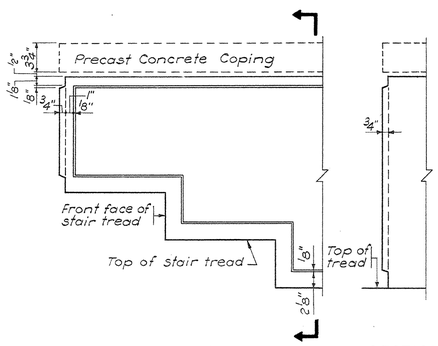

ELEVATION SECTION

TYPE "A" FINISH AT STAIR CHEEK WALLS

Scale: 1½" = 1'-0"

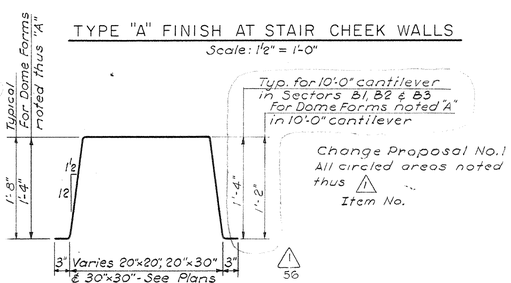

Change Proposal No.1
All circled areas noted thus ⚠ ...
Item No.

TYPICAL DOME FORM FOR WAFFLE SLABS

Scale: 1"=1'-0"

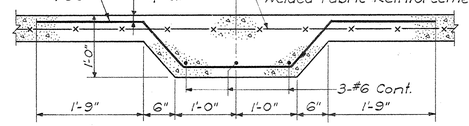

TYPICAL DETAIL SLAB ON GRADE THICKENING BELOW MASONRY PARTITIONS

Scale: 1" = 1'-0"

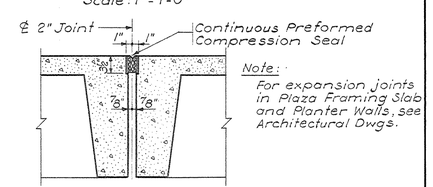

Note: For expansion joints in Plaza Framing Slab and Planter Walls, see Architectural Dwgs.

TYPICAL EXPANSION JOINT IN STRUCTURE MEZZANINE LEVEL

Scale: 1" = 1'-0"

CAPITAL PLAZA OFFICE BUILDING

FRANKFORT, KENTUCKY

DRAWN BY	TYPICAL & MISCELLANEOUS DETAILS	DATE 15 MAY 67
TRACED BY		SCALE AS NOTED
CHECKED BY J.T.	ARCHITECT EDWARD DURELL STONE 7 EAST 67TH STREET NEW YORK N.Y.	COMM. NO. 5006
SECTOR NO. ALL BUT C2	ASSOCIATE ARCHITECTS & ENGINEERS LEE POTTER SMITH & ASSOCIATES 314 WILKINSON FRANKFORT, KENTUCKY	DRAWING NO. S 70
	COMMONWEALTH OF KENTUCKY DEPARTMENT OF FINANCE — ENGINEERING STAFF FRANKFORT, KENTUCKY	OF 71

STATE OF KENTUCKY — RICHARD Q. PRAEGER No. 6175 — REGISTERED PROFESSIONAL ENGINEER

PRAEGER-KAVANAGH-WATERBURY
STRUCTURAL-ENGINEERS
R.Q. PRAEGER, Partner

AS-BUILT INFORMATION
DATE
...ECTS & PLANNERS, INC.

APPROVED BY ARCHITECT DATE

APPROVED BY AGENCY DATE 6/28/68

APPROVED BY OWNER DATE

C.P.A.-146

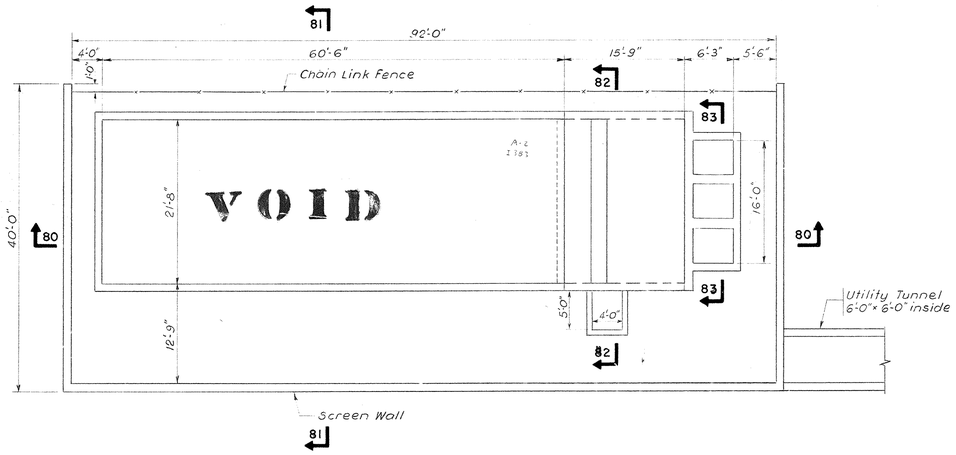

PLAN
Scale: 1/8" = 1'-0"

NOTE:
The exterior faces of screen wall shall have finish Type "C": Form exterior and interior wall faces with Glassfiber reinforced plastic forms.

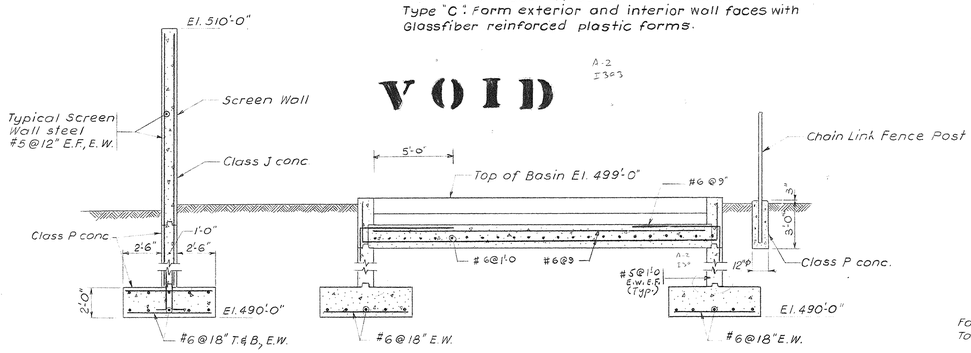

SCREEN WALL DETAILS

SECTION 81-81
Scale: 1/4" = 1'-0"

Utility Tunnel included in Contract

For location of Cooling Tower see Dwg. No. A1.

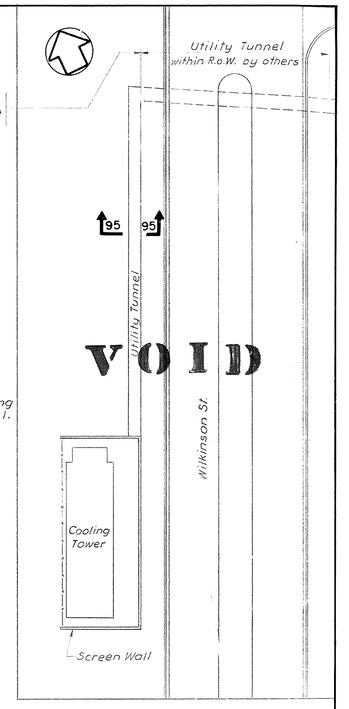

SITE PLAN
Scale: 1" = 30'

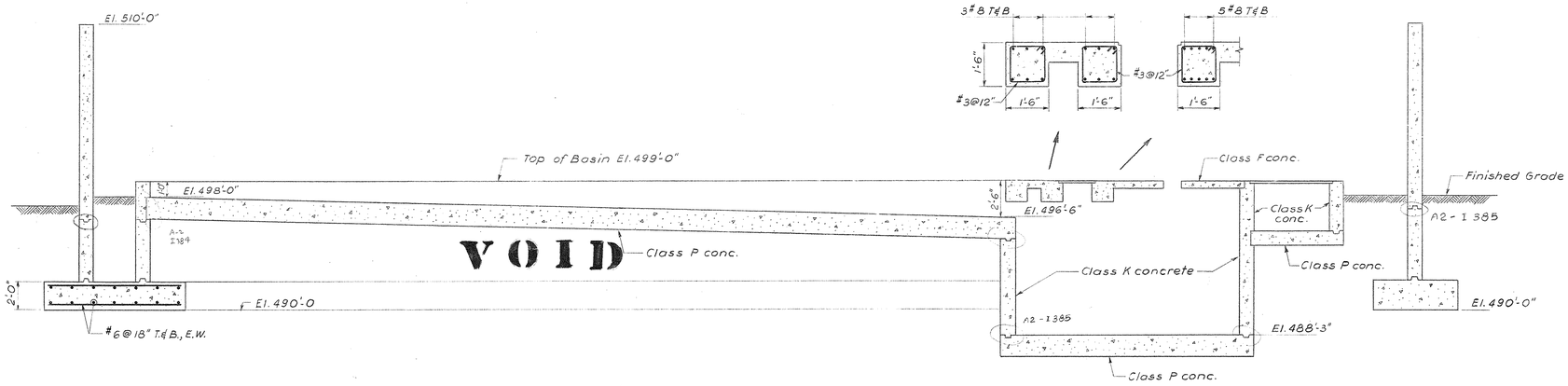

SECTION 80-80
Scale: 1/4" = 1'-0"

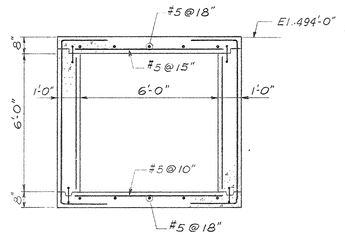

SECTION 95-95
Scale: 3/8" = 1'-0"

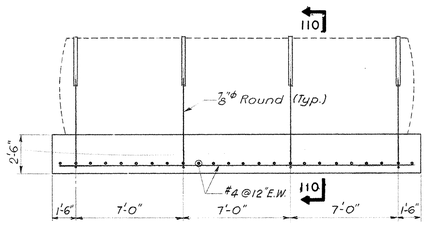

ELEVATION
Scale: 1/4" = 1'-0"

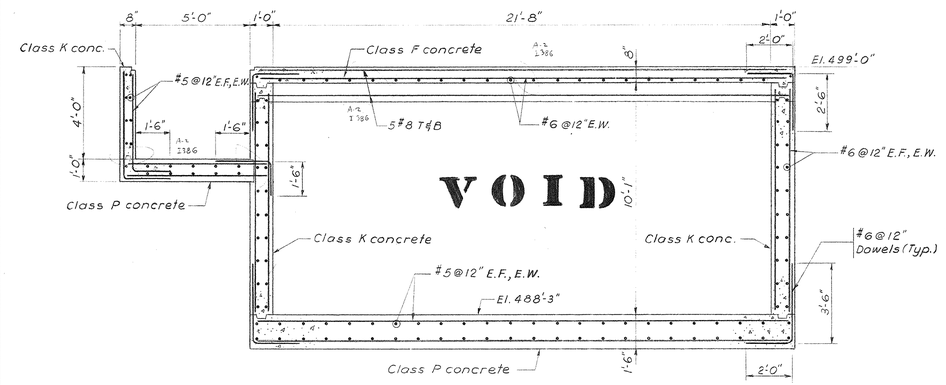

SECTION 82-82
Scale: 3/8" = 1'-0"

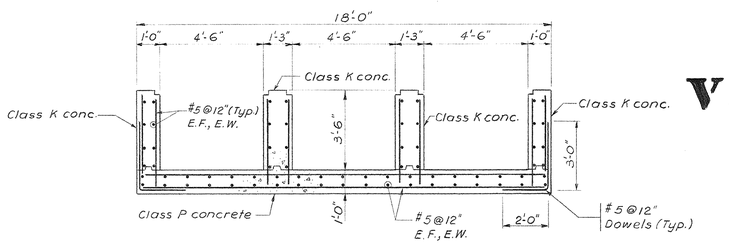

SECTION 83-83
Scale: 3/8" = 1'-0"

VOID

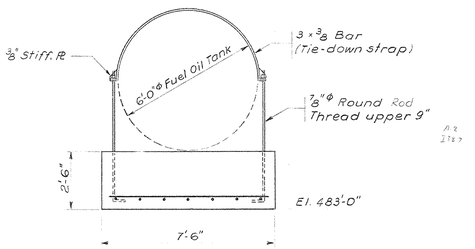

SECTION 110-110
Scale: 3/8" = 1'-0"

FUEL OIL TANK FOUNDATION DETAILS
(See Dwg. No. S4 for location)

TRACINGS CONFORMED TO ADDENDA 11-1-67

CAPITAL PLAZA OFFICE BUILDING
FRANKFORT, KENTUCKY

DRAWN BY J.B.	COOLING TOWER & MISC. DETAILS	DATE 15 MAY 67
TRACED BY		SCALE AS NOTED
CHECKED BY J.L.	ARCHITECT EDWARD DURELL STONE 7 EAST 67TH STREET NEW YORK N.Y.	COMM. NO. 50066
SECTOR NO. ALL BUT C2	ASSOCIATE ARCHITECTS & ENGINEERS LEE POTTER SMITH & ASSOCIATES 314 WILKINSON FRANKFORT, KENTUCKY	DRAWING NO. S 71
	COMMONWEALTH OF KENTUCKY DEPARTMENT OF FINANCE — ENGINEERING STAFF FRANKFORT, KENTUCKY	OF 71

STATE OF KENTUCKY — RICHARD Q. PRAEGER No. 6178 — REGISTERED PROFESSIONAL ENGINEER

PRAEGER-KAVANAGH-WATERBURY
STRUCTURAL-ENGINEERS
R.Q. PRAEGER, Partner

APPROVED BY ARCHITECT DATE
APPROVED BY DATE
APPROVED BY OWNER DATE

CPA-147

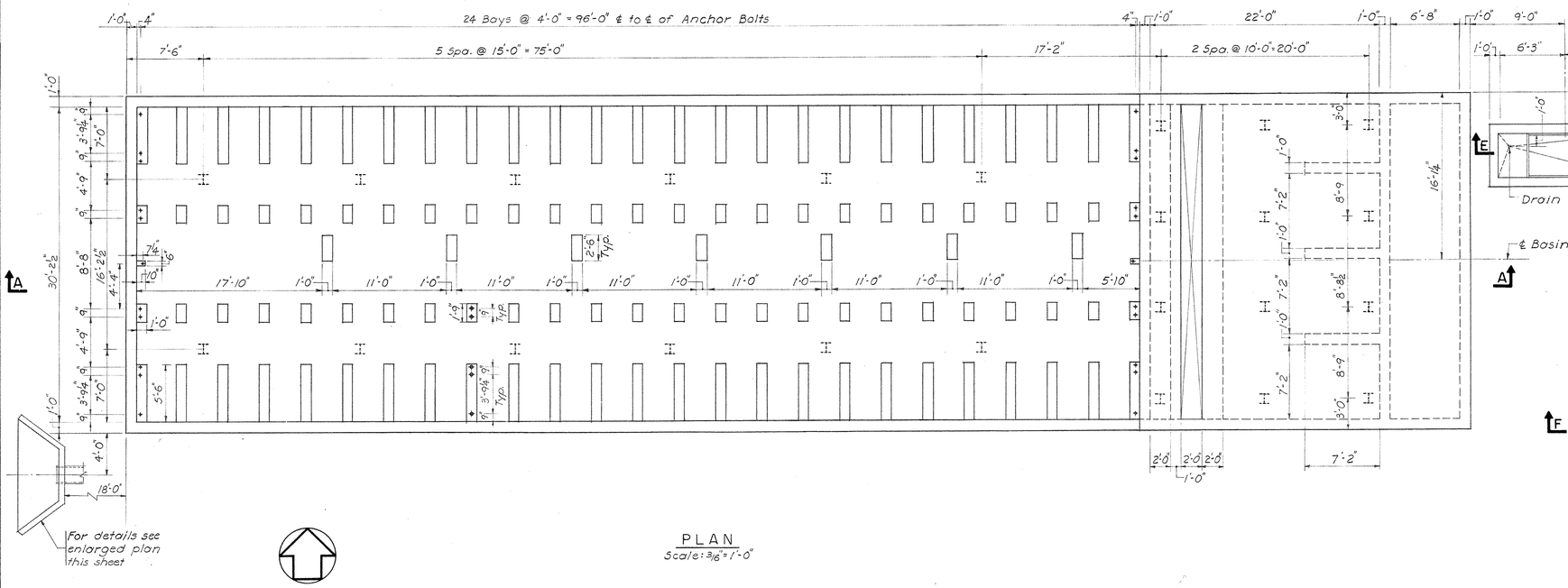

PLAN
Scale: 3/16" = 1'-0"

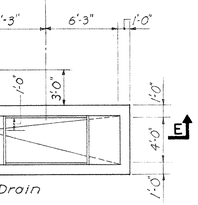

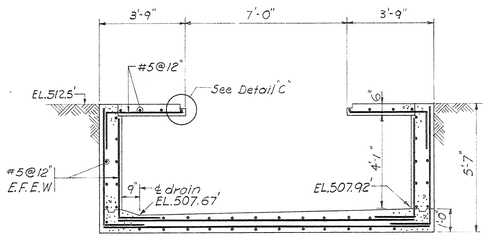

SECTION E-E
Scale: 3/8" = 1'-0"

MASTER WTR. METER INSTALLATION

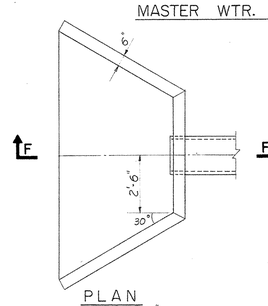

PLAN
Scale: 3/8" = 1'-0"

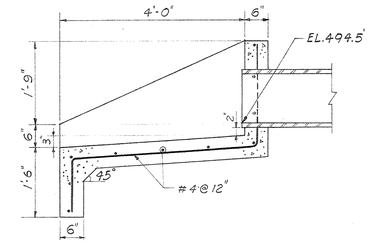

SECTION F-F
Scale: 3/4" = 1'-0"

DETAIL OF HEADWALL

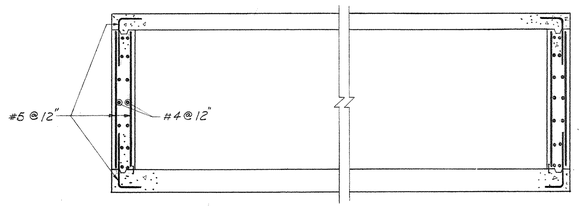

SECTION B-B
Scale: 3/8" = 1'-0"

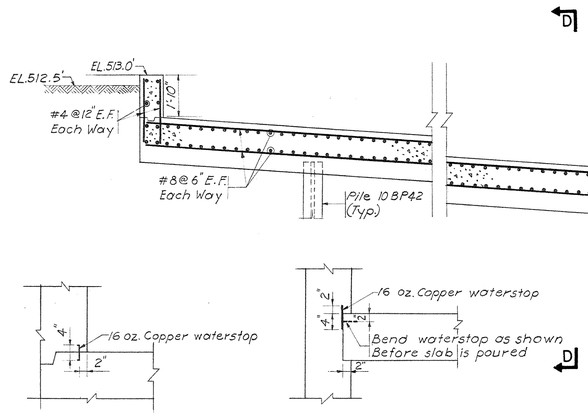

DETAIL 'A'
Scale: 3/4" = 1'-0"

DETAIL 'B'
Scale: 3/4" = 1'-0"

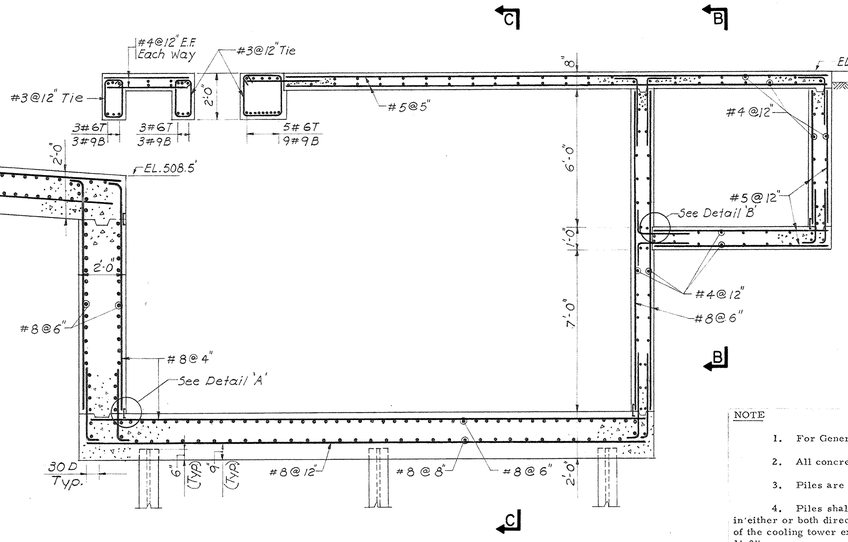

SECTION A-A
Scale: 3/8" = 1'-0"

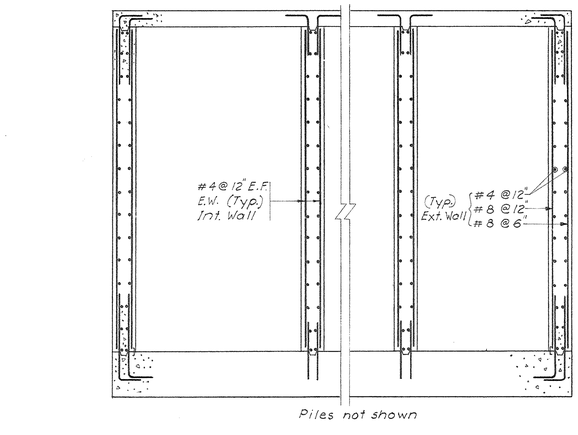

Piles not shown

SECTION C-C
Scale: 3/8" = 1'-0"

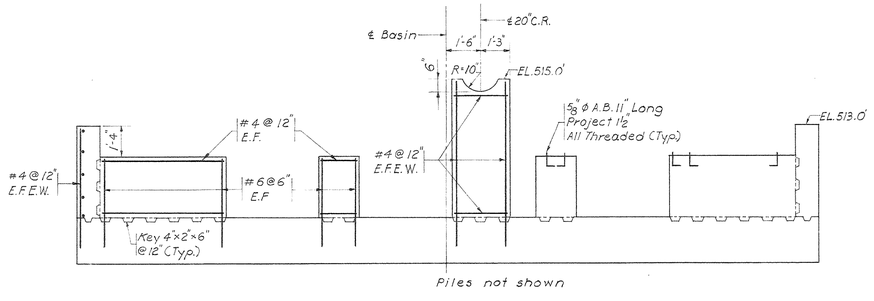

Piles not shown

SECTION D-D
Scale: 3/8" = 1'-0"

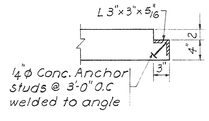

DETAIL 'C'
Scale: 1" = 1'-0"

NOTE

1. For General Notes see Dwg. No. S69.
2. All concrete is class "P" concrete.
3. Piles are 10BP42.
4. Piles shall be driven with maximum deviation of 4'-0" in either or both directions perpendicular and parallel to the axes of the cooling tower except that minimum edge distance shall be 1'-3".
5. Piles shall be driven to rock bearing. See "Site Survey and Subsurface Investigation" by L.E. Gregg for approximate elevation of rock. Obstructions are anticipated and piles may have to be pulled and redriven or cut off and new piles driven to rock in adjacent locations within the four feet tolerance permitted in Note 4. If additional tolerance is required, the Architect shall be notified and a redesign of foundation may be required.
6. For locations of cooling tower, water meter and headwall, see Mechanical Drawing.
7. For pipe sleeve locations and sizes see Mechanical Drawings and provide additional reinforcing steel at sleeves as per details on Dwg. S69.

CAPITAL PLAZA OFFICE BUILDING

FRANKFORT, KENTUCKY

DRAWN BY J.S.	COOLING TOWER	DATE
TRACED BY		SCALE AS SHOWN
CHECKED BY	ARCHITECT EDWARD DURELL STONE 7 EAST 67TH STREET NEW YORK N.Y.	COMM. NO.
SECTOR NO.	ASSOCIATE ARCHITECTS & ENGINEERS LEE POTTER SMITH & ASSOCIATES 314 WILKINSON FRANKFORT, KENTUCKY	DRAWING NO. S71R
CPA-15	COMMONWEALTH OF KENTUCKY DEPARTMENT OF FINANCE – ENGINEERING STAFF FRANKFORT, KENTUCKY	OF

CHANGE ORDER PROPOSAL NO. DATE
ITEM NO.

APPROVED BY AGENCY HEAD DATE

APPROVED BY OWNER DATE

CLARKEMAN, INC.

CPA 147A CPA 147A

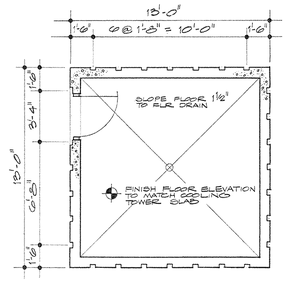

PLAN

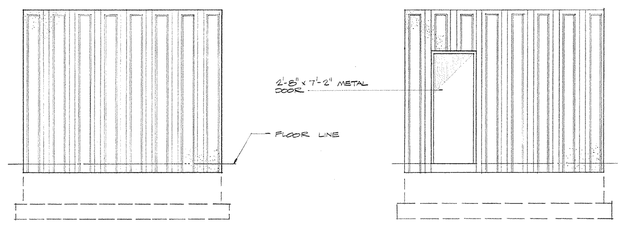

SOUTH

WEST

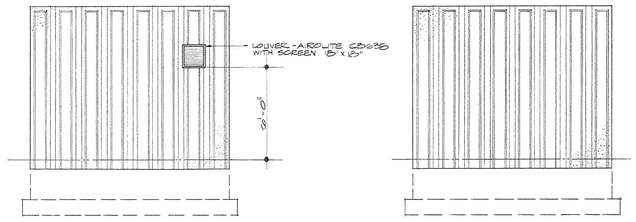

NORTH

EAST

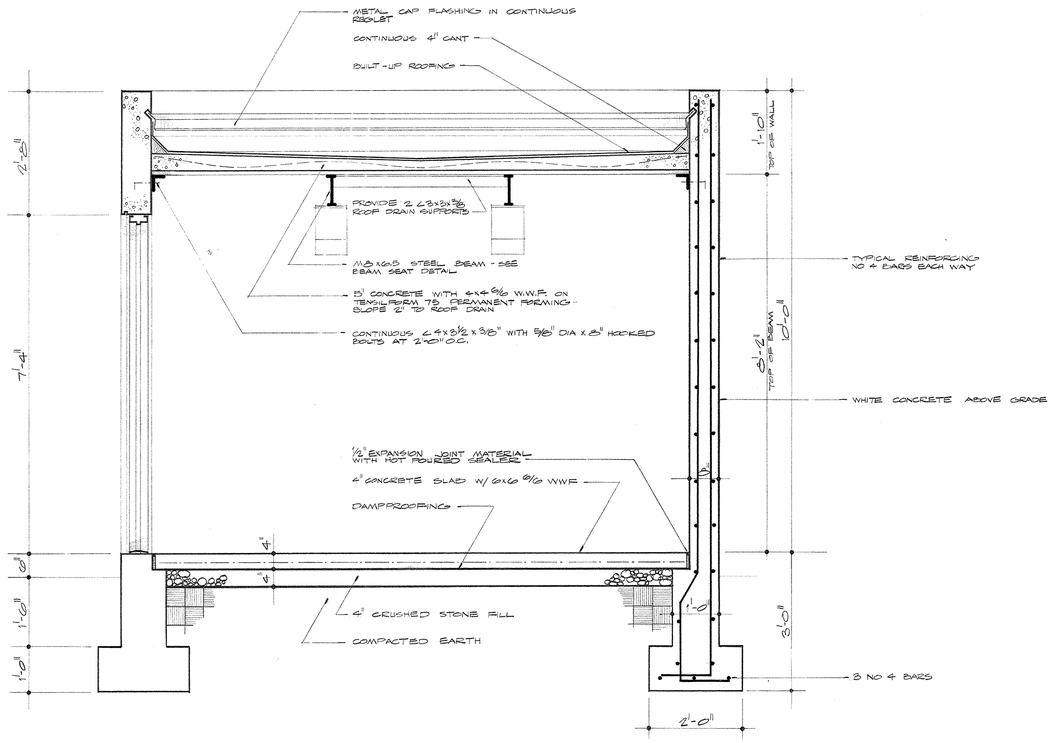

SECTION

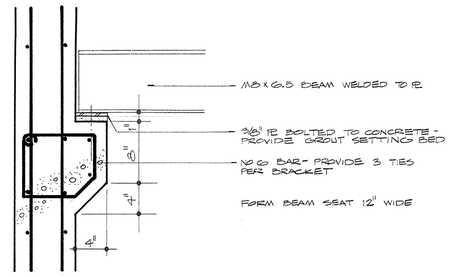

BEAM SEAT

DOOR HARDWARE
THRESHOLD
LOCKSET
1½ PAIRS BUTTS

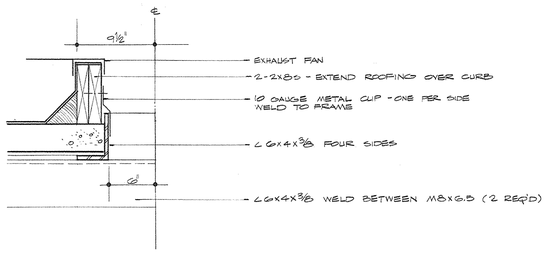

EXHAUST FAN CURB

NOTE:
THIS SHEET INCLUDED AS PART OF THE ARCHITECTURAL AS BUILT DWGS AS OF JAN 73

AS BUILT REVISIONS - 11 AUGUST 1972
WGS C.O.# 40, IT#2

CHEMICAL TREATMENT-COOLING TOWER	
CAPITAL PLAZA OFFICE BLDG FRANKFORT, KENTUCKY	DATE MAY, 1971 COMM. NO.
LEE POTTER SMITH, PRITCHETT, HUGG & CARTER ARCHITECTS ENGINEERS 314 WILKINSON STREET FRANKFORT, KENTUCKY	DRAWING NO. A 1 B
COMMONWEALTH OF KENTUCKY DEPARTMENT OF FINANCE – DIVISION OF ENGINEERING FRANKFORT KENTUCKY	OF
APPROVED BY AGENCY HEAD	DATE
APPROVED BY OWNER	DATE

BRUNING 44-132

CPA-147 B

NOTE:
ALL CONDUIT SHALL BE RIGID AND SHALL BE RUN EXPOSED PARALLEL TO WALLS.

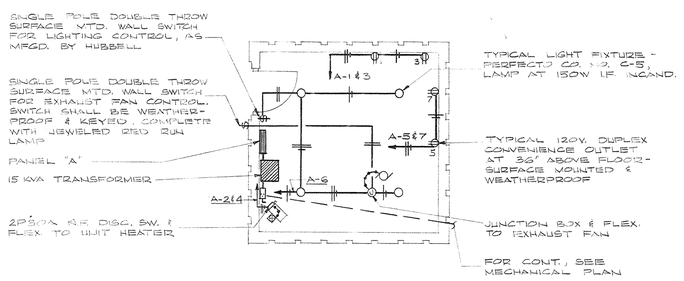

ELECTRICAL PLAN
SCALE: 1/4" = 1'-0"

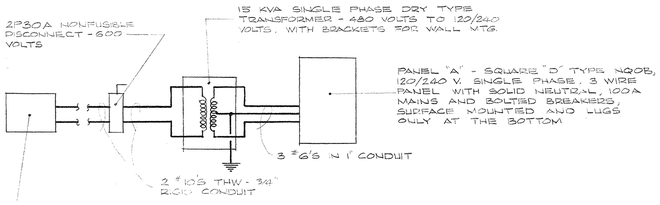

600 VOLT 2P30A FUSIBLE SWITCH FUSED AT 30 AMPS. THIS CONTRACTOR SHALL FURNISH AND INSTALL SWITCH IN EXISTING MOTOR CONTROL CENTER MCC-D, SECTION B. EXACT LOCATION SHALL BE COORDINATED WITH SQUARE "D" CO.

FEEDER DIAGRAM
NO SCALE

PANEL "A"

BKR	DESCRIPTION	WIRE	CKT		CKT	WIRE	DESCRIPTION	BKR
1P20	CHLORINATOR	12'S	1		2	12'S	UNIT HEATER	2P20
1P20	CHLORINATOR	12'S	3		4	—	—	—
1P20	PUMP	12'S	5		6	12'S	LTG. & EXH. FAN	1P20
1P20	PUMP	12'S	7		8		SPARE	1P20

BUSSING DIAGRAM
NO SCALE

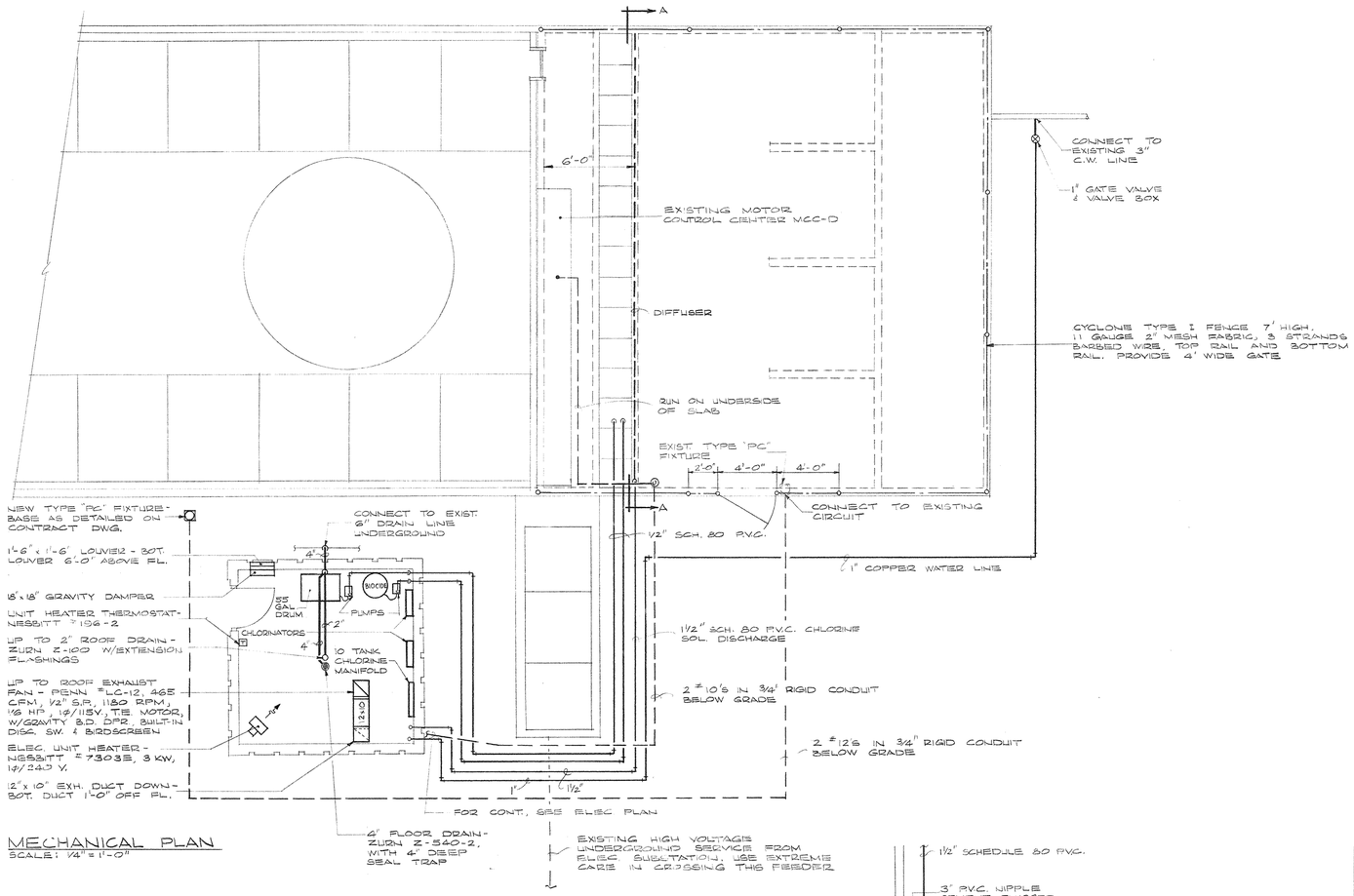

MECHANICAL PLAN
SCALE: 1/4" = 1'-0"

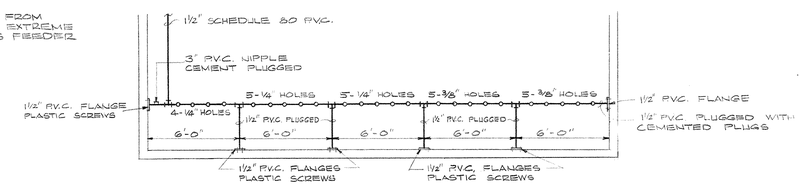

SECTION "A-A" - DIFFUSER
SCALE: 1/4" = 1'-0"

MATERIAL

2 - W & T SERIES V-75 CHLORINATORS - TOTAL CAPACITY 600 #- 24 HRS.
2 - SETS MINOR ACCESSORIES
10 - UNION TANK VALVES W-1243
5 - FLEXIBLE CONNECTIONS WX8-493
3 - FLEXIBLE CONNECTIONS WXC-493
2 - FLEXIBLE CONNECTIONS WXC-235
1 - FLEXIBLE CONNECTION WX3-1098
2 - CHLORINE HEADER VALVES H-1214-B-1
1 - 10 TANK MANIFOLD W-7417
1 - 1" STRAINER
1 - 3/4" 115 VOLT SOLENOID VALVE
2 - WATER PRESSURE GAUGES
2 - SERIES 220 CHEM-TECH FEEDERS
1 - 53 GAL. POLY. BBL. COVER & FITTINGS
1 - SET EXTRA BBL. FITTINGS
2 - 3/4" CHECK VALVES P.V.C.
1 - 20' LONG 1" 1125E
2 - PARAGON TIMERS
1 - 3/4" ADAPTER P-7737
LENGTHS 1/4" SCHEDULE 80 P.V.C. PIPE & FITTINGS
10 - CYLINDER YOKES H-628
10 - YOKE ADAPTERS H-5888-E
2 - VACUUM BREAKERS

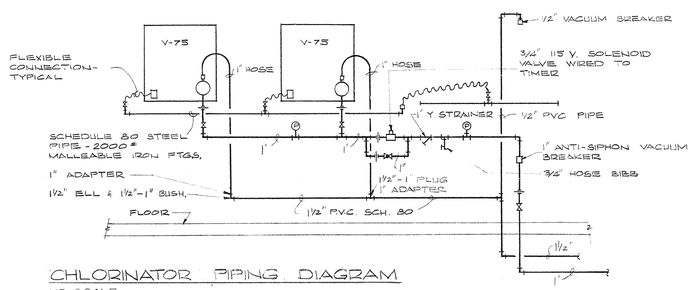

CHLORINATOR PIPING DIAGRAM
NO SCALE

NOTE:
THIS SHEET INCLUDED AS PART OF PLUMBING AS-BUILT DRAWINGS AS OF JAN. 73

CHANGE ORDER № 40 , ITEM № 2

AS-BUILT DRAWINGS
DATE: JAN 73
HUGG, CARTER & BLANCHARD, INC.

O. GUY CARTER 4571 REGISTERED PROFESSIONAL ENGINEER STATE OF KENTUCKY

CHEMICAL TREATMENT-
COOLING TOWER

CAPITAL PLAZA OFFICE BLDG.
FRANKFORT, KENTUCKY

DATE: MAY, 1971
COMM. NO.

LEE POTTER SMITH, PRITCHETT, HUGG & CARTER
ARCHITECTS ENGINEERS
314 WILKINSON STREET FRANKFORT, KENTUCKY

DRAWING NO. 2 OF 2

COMMONWEALTH OF KENTUCKY
DEPARTMENT OF FINANCE — DIVISION OF ENGINEERING
FRANKFORT KENTUCKY

APPROVED BY AGENCY HEAD DATE

APPROVED BY OWNER DATE

CPA 147-C